The right choice for the ultimate yield!

LSIS strives to maximize your profits in gratitude for choosing us as your partner.

0.75 ~18.5kW [200V] / 0.75 ~ 500kW [400V]

AC Variable Speed Drive

LSLV-H100 User Manual

www.nicsanat.com
021-87700210
NIC SANAT
نیک صنعت

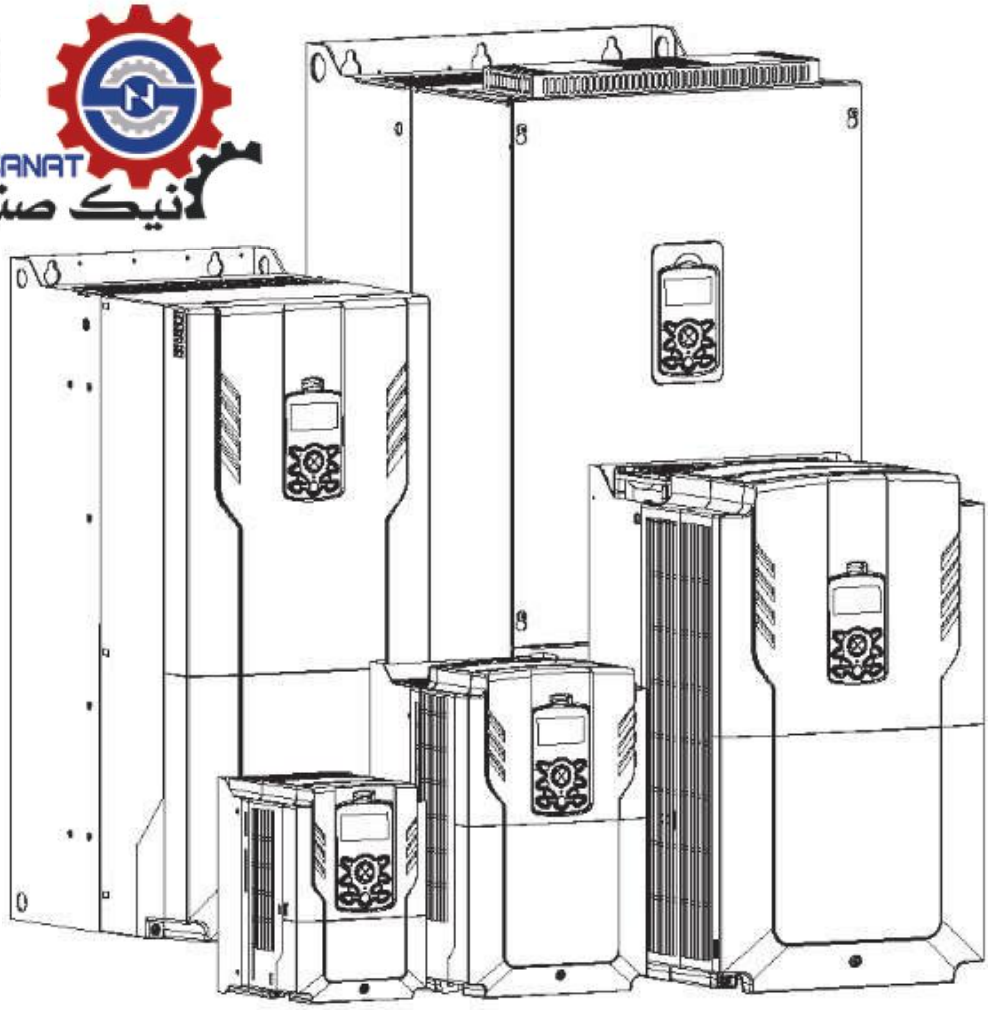

Safety Instructions

- Read this manual carefully before installing, wiring, operating, servicing or inspecting this equipment.
- Keep this manual within easy reach for quick reference.

LSIS
www.lsis.com

This operation manual is intended for users with basic knowledge of electricity and electric devices.
* LSLV-H100 is the official name for the H100 series inverters.
* The H100 series software may be updated without prior notice for better performance. To check the latest software, visit our website at http://www.lsis.com.

www.nicsanat.com
021-87700210
NIC SANAT
نیک صنعت

Safety Information

Read and follow all safety instructions in this manual precisely to avoid unsafe operating conditions, property damage, personal injury, or death.

Safety symbols in this manual

Danger

Indicates an imminently hazardous situation which, if not avoided, will result in severe injury or death.

Warning

Indicates a potentially hazardous situation which, if not avoided, could result in injury or death.

Caution

Indicates a potentially hazardous situation that, if not avoided, could result in minor injury or property damage.

Safety information

Danger

- Do not open the cover of the equipment while it is on or operating. Likewise, do not operate the inverter while the cover is open. Exposure of high voltage terminals or charging area to the external environment may result in an electric shock. Do not remove any covers or touch the internal circuit boards (PCBs) or electrical contacts on the product when the power is on or during operation. Doing so may result in serious injury, death, or serious property damage.
- Do not open the cover of the equipment even when the power supply to the inverter has been turned off unless it is necessary for maintenance or regular inspection. Opening the cover may result in an electric shock even when the power supply is off.
- The equipment may hold charge long after the power supply has been turned off. Use a multi-meter to make sure that there is no voltage before working on the inverter, motor or motor cable.
- Supply earthing system: TT, TN, not suitable for corner-earthed systems

Warning

- This equipment must be grounded for safe and proper operation.
- Do not supply power to a faulty inverter. If you find that the inverter is faulty, disconnect the power supply and have the inverter professionally repaired.
- The inverter becomes hot during operation. Avoid touching the inverter until it has cooled to avoid burns.

- Do not allow foreign objects, such as screws, metal chips, debris, water, or oil to get inside the inverter. Allowing foreign objects inside the inverter may cause the inverter to malfunction or result in a fire.
- Do not operate the inverter with wet hands. Doing so may result in electric shock.

ⓘ Caution

- Do not modify the interior workings of the inverter. Doing so will void the warranty.
- The inverter is designed for 3-phase motor operation. Do not use the inverter to operate a single phase motor.
- Do not place heavy objects on top of electric cables. Doing so may damage the cable and result in an electric shock.

Note

Maximum allowed prospective short-circuit current at the input power connection is defined in IEC 60439-1 as 100 kA. LSLV-H100 is suitable for use in a circuit capable of delivering not more than 100kA RMS at the drive's maximum rated voltage, depending on the selected MCCB. RMS symmetrical amperes for recommended MCCB are the following table.

Remarque

Le courant maximum de court-circuit présumé autorisé au connecteur d'alimentation électrique est défini dans la norme IEC 60439-1 comme égal à 100 kA. Selon le MCCB sélectionné, la série LSLV-H100 peut être utilisée sur des circuits pouvant fournir un courant RMS symétrique de 100 kA maximum en ampères à la tension nominale maximale du variateur. Le tableau suivant indique le MCCB recommandé selon le courant RMS symétrique en ampères.

Working Voltage	UTE100 (E/N)	UTS150 (N/H/L)	UTS250 (N/H/L)	UTS400 (N/H/L)
240V(50/60Hz)	50/65kA	65/100/150kA	65/100/150kA	65/100/150kA
480V(50/60Hz)	25/35kA	35/65/100kA	35/65/100kA	35/65/100kA

Working Voltage	ABS33c	ABS53c	ABS63c	ABS103c	ABS203c	ABS403c
240V(50/60Hz)	30kA	35kA	35kA	85kA	85kA	75kA
480V(50/60Hz)	7.5kA	10kA	10kA	26kA	26kA	35kA

Quick Reference Table

The following table contains situations frequently encountered by users while working with inverters. Refer to the typical and practical situations in the table to quickly and easily locate answers to your questions.

I want to configure the inverter to start operating as soon as the power source is applied.	p.17
I want to configure the motor's parameters.	p.219
Something seems to be wrong with the inverter or the motor.	p.345, p.566
What is auto tuning?	p.219
What are the recommended wiring lengths?	p.40
The motor is too noisy.	p.250
I want to apply PID control on my system.	p.163
What are the factory default settings for P1–P7 multi-function terminals?	p.38
I want to view all of the parameters I have modified.	p.259
I want to review recent fault trip and warning histories.	p.59
I want to change the inverter's operation frequency using a potentiometer.	p.90
I want to install a frequency meter using an analog terminal.	p.38
I want to display the supply current to motor.	p.55
I want to operate the inverter using a multi-step speed configuration.	p.104
The motor runs too hot.	p.321
The inverter is too hot.	p.333
The cooling fan does not work.	p.574
I want to change the items that are monitored on the keypad.	p.316
I want to display the supply current to motor.	p.316

www.nicsanat.com
021-87700210
NIC SANAT
نیک صنعت

Table of Contens

1 Preparing the Installation 1

1.1 Product Identification 1
1.2 Part Names 3
1.3 Installation Considerations 10
1.4 Selecting and Preparing a Site for Installation 11
1.5 Cable Selection 14

2 Installing the Inverter 17

2.1 Mounting the Inverter 19
2.2 Enabling the RTC (Real-Time Clock) Battery 23
2.3 Cable Wiring 26
2.4 Post-Installation Checklist 48
2.5 Test Run 50

3 Perform Basic Operations 52

3.1 About the Keypad 52
3.1.1 Operation Keys 52
3.1.2 About the Display 55
3.1.3 Display Modes 59
3.2 Learning to Use the Keypad 63
3.2.1 Display Mode Selection 63
3.2.2 Operation Modes 64
3.2.3 Switching between Groups in Parameter Display Mode 66
3.2.4 Switching between Groups in User & Macro Mode 67
3.2.5 Navigating through the Codes (Functions) 68
3.2.6 Navigating Directly to Different Codes 70
3.2.7 Parameter Settings available in Monitor Mode 72
3.2.8 Setting the Monitor Display Items 73
3.2.9 Selecting the Status Bar Display Items 75
3.3 Fault Monitoring 77
3.3.1 Monitoring Faults during Inverter Operation 77
3.3.2 Monitoring Multiple Fault Trips 78
3.4 Parameter Initialization 79

4 Learning Basic Features 80

4.1 Switching between the Operation Modes (HAND / AUTO / OFF) 83
4.2 Setting Frequency Reference 88
4.2.1 Keypad as the Source (KeyPad-1 setting) 89
4.2.2 Keypad as the Source (KeyPad-2 setting) 89
4.2.3 V1 Terminal as the Source 89
4.2.4 Setting a Frequency Reference with Input Voltage (Terminal I2) 99
4.2.5 Setting a Frequency with TI Pulse Input 100
4.2.6 Setting a Frequency Reference via RS-485 Communication 102
4.3 Frequency Hold by Analog Input 103
4.4 Changing the Displayed Units (Hz↔Rpm) 104
4.5 Setting Multi-step Frequency 104
4.6 Command Source Configuration 106
4.6.1 The Keypad as a Command Input Device 106
4.6.2 Terminal Block as a Command Input Device (Fwd/Rev run commands) 107
4.6.3 Terminal Block as a Command Input Device (Run and Rotation Direction Commands) 108
4.6.4 RS-485 Communication as a Command Input Device 109
4.7 Forward or Reverse Run Prevention 110
4.8 Power-on Run 111
4.9 Reset and Restart 113
4.10 Setting Acceleration and Deceleration Times 114
4.10.1 Acc/Dec Time Based on Maximum Frequency 114
4.10.2 Acc/Dec Time Based on Operation Frequency 117
4.10.3 Multi-step Acc/Dec Time Configuration 118
4.10.4 Configuring Acc/Dec Time Switch Frequency 120
4.11 Acc/Dec Pattern Configuration 121
4.12 Stopping the Acc/Dec Operation 124
4.13 V/F (Voltage/Frequency) Control 125
4.13.1 Linear V/F Pattern Operation 125
4.13.2 Square Reduction V/FPattern Operation 126
4.13.3 User V/F Pattern Operation 127
4.14 Torque Boost 129
4.14.1 Manual Torque Boost 129
4.14.2 Auto Torque Boost 130
4.14.3 Auto Torque Boost 2 (No Motor Parameter Tuning Required) 130
4.15 Output Voltage Setting 131

4.16 Start Mode Setting....132
4.16.1 Acceleration Start....132
4.16.2 Start After DC Braking....132
4.17 Stop Mode Setting....133
4.17.1 Deceleration Stop....133
4.17.2 Stop After DC Braking....134
4.17.3 Free Run Stop....135
4.17.4 Power Braking....136
4.18 Frequency Limit....137
4.18.1 Frequency Limit Using Maximum Frequency and Start Frequency....137
4.18.2 Frequency Limit Using Upper and Lower Limit Frequency Values 137
4.18.3 Frequency Jump....140
4.19 2nd Operation Mode Setting....141
4.20 Multi-function Input Terminal Control....142
4.21 Multi-function Input Terminal On/Off Delay Control....144
5 Learning Advanced Features....145
5.1 Operating with Auxiliary References....147
5.2 Jog Operation....153
5.2.1 Jog Operation 1-Forward Jog by Multi-function Terminal....153
5.2.2 Jog Operation 2-Forward/Reverse Jog by Multi-function Terminal....154
5.3 Up-down Operation....155
5.4 3- Wire Operation....157
5.5 Safe Operation Mode....158
5.6 Dwell Operation....160
5.7 Slip Compensation Operation....162
5.8 PID Control....163
5.8.1 PID Basic Operation....164
5.8.2 Soft Fill Operation....179
5.8.3 PID Sleep Mode....181
5.8.4 PID Switching (PID Openloop)....183
5.9 External PID....184
5.10 Damper Operation....194
5.11 Lubrication Operation....196
5.12 Flow Compensation....197
5.13 Payback Counter....198

5.14 Pump Clean Operation....200
5.15 Start & End Ramp Operation....204
5.16 Decelerating Valve Ramping....206
5.17 Load Tuning....207
5.18 Level Detection....209
5.19 Pipe Break Detection....213
5.20 Pre-heating Function....216
5.21 Auto Tuning....219
5.22 Time Event Scheduling....222
5.23 Kinetic Energy Buffering....237
5.24 Anti-hunting Regulation (Resonance Prevention)....239
5.25 Fire Mode Operation....240
5.26 Energy Saving Operation....242
5.26.1 Manual Energy Saving Operation....242
5.26.2 Automatic Energy Saving Operation....242
5.27 Speed Search Operation....243
5.28 Auto Restart Settings....248
5.29 Operational Noise Settings (Carrier Frequency Settings)....250
5.30 2nd Motor Operation....251
5.31 Supply Power Transition....253
5.32 Cooling Fan Control....254
5.33 Input Power Frequency and Voltage Settings....255
5.34 Read, Write, and Save Parameters....256
5.35 Parameter Initialization....257
5.36 Parameter View Lock....258
5.37 Parameter Lock....258
5.38 Changed Parameter Display....259
5.39 User Group....260
5.40 Easy Start On....261
5.41 Config (CNF) Mode....263
5.42 Macro Selection....264
5.43 Timer Settings....265
5.44 Multiple Motor Control (MMC)....266
5.44.1 Multiple Motor Control (MMC) Basic Sequence....274
5.44.2 Standby Motor....279

5.44.3 Auto Change 280
5.44.4 Interlock 286
5.44.5 Aux Motor Time Change 290
5.44.6 Regular Bypass 291
5.44.7 Aux Motor PID Compensation 292
5.44.8 Master Follower 294
5.45 Multi-function Output On/Off Control 300
5.46 Press Regeneration Prevention 301
5.47 Analog Output 303
5.47.1 Voltage and Current Analog Output 303
5.47.2 Analog Pulse Output 306
5.48 Digital Output 309
5.48.1 Multi-function Output Terminal and Relay Settings 309
5.48.2 Fault Trip Output using Multi-function Output Terminal and Relay 314
5.48.3 Multi-function Output Terminal Delay Time Settings 315
5.49 Operation State Monitor 316
5.50 Operation Time Monitor 318
5.51 PowerOn Resume Using the Communication 319
6 Learning Protection Features 321
6.1 Motor Protection 321
6.1.1 Electronic Thermal Motor Overheating Prevention (ETH) 321
6.1.2 Motor Over Heat Sensor 323
6.1.3 Overload Early Warning and Trip 325
6.1.4 Stall Prevention and Flux Braking 327
6.2 Inverter and Sequence Protection 331
6.2.1 Open-phase Protection 331
6.2.2 External Trip Signal 332
6.2.3 Inverter Overload Protection (IOLT) 333
6.2.4 Speed Command Loss 334
6.2.5 Dynamic Braking (DB) Resistor Configuration 338
6.2.6 Low Battery Voltage Warning 339
6.3 Under load Fault Trip and Warning 340
6.3.1 Fan Fault Detection 341
6.3.2 Low Voltage Fault Trip 342
6.3.3 Selecting Low Voltage 2 Fault During Operation 342
6.3.4 Output Block via the Multi-function Terminal 343
6.3.5 Trip Status Reset 343

6.3.6 Operation Mode for Option Card Trip 344
6.3.7 No Motor Trip 345
6.3.8 Broken Belt 346
6.4 Parts Life Expectancy 347
6.4.1 Main Capacitor Life Estimation 347
6.4.2 Fan Life Estimation 349
6.5 Fault/Warning List 351
7 RS-485 Communication Features 354
7.1 Communication Standards 354
7.2 Communication System Configuration 355
7.2.1 Communication Line Connection 355
7.2.2 Setting Communication Parameters 357
7.2.3 Setting Operation Command and Frequency 359
7.2.4 Command Loss Protective Operation 359
7.3 LS INV 485/Modbus-RTU Communication 362
7.3.1 Setting Virtual Multi-function Input 362
7.3.2 Saving Parameters Defined by Communication 362
7.3.3 Total Memory Map for Communication 364
7.3.4 Parameter Group for Data Transmission 365
7.3.5 Parameter Group for User/Macro Group 366
7.3.6 LS INV 485 Protocol 367
7.3.7 Modbus-RTU Protocol 373
7.3.8 Compatible Common Area Parameter 378
7.3.9 H100 Expansion Common Area Parameter 382
7.4 BACnet Communication 398
7.4.1 What is BACnet Communication? 398
7.4.2 BACnet Communication Standards 398
7.4.3 BACnet Quick Communication Start 398
7.4.4 Protocol Implementation 401
7.4.5 Object Map 401
7.5 Metasys-N2 Communication 410
7.5.1 Metasys-N2 Quick Communication Start 410
7.5.2 Metasys-N2 Communication Standard 410
7.5.3 Metasys-N2 Protocol I/O Point Map 411
8 Table of Functions 415
8.1 Drive Group (DRV) 415
8.2 ..... Basic Function Group (BAS)

420
8.3 Expanded Function Group (ADV) 427
8.4 Control Function Group (CON) 433
8.5 Input Terminal Group (IN) 436
8.6 Output Terminal Block Function Group (OUT) 445
8.7 Communication Function Group (COM) 451
8.8 Advanced Function Group(PID Functions) 458
8.9 EPID Function Group (EPID) 470
8.10 Application 1 Function Group (AP1) 477
8.11 Application 2 Function Group (AP2) 483
8.12 Application 3 Function Group (AP3) 489
8.13 Protection Function Group (PRT) 496
8.14 2nd Motor Function Group (M2) 506
8.15 Trip (TRIP Last-x) and Config (CNF) Mode 510
8.15.1 Trip Mode (TRP Last-x) 510
8.15.2 Config Mode (CNF) 511
8.16 Macro Groups 516
8.16.1 Compressor (MC1) Group 516
8.16.2 Supply Fan (MC2) Group 519
8.16.3 Exhaust Fan (MC3) Group 521
8.16.4 Cooling Tower (MC4) Group 542
8.16.5 Circululation Pump (MC5) Group 545
8.16.6 Vacuum Pump (MC6) Group 549
8.16.7 Constant Torque (MC7) Group 558
9 Troubleshooting 561
9.1 Trip and Warning 561
9.1.1 Fault Trips 561
9.1.2 Warning Message 565
9.2 Troubleshooting Fault Trips 566
9.3 Troubleshooting Other Faults 569
10 Maintenance 576
10.1 Regular Inspection Lists 576
10.1.1 Daily Inspection 576
10.1.2 Annual Inspection 577
10.1.3 Bi-annual Inspection 579
10.2 Real Time Clock (RTC) Battery Replacement 580

10.3 Storage and Disposal....584
10.3.1 Storage....584
10.3.2 Disposal....584
11 Technical Specification....585
11.1 Input and Output Specifications....585
11.2 Product Specification Details....591
11.3 External Dimensions....595
11.4 Peripheral Devices....600
11.5 Fuse and Reactors Specifications....603
11.6 Terminal Screw Specifications....604
11.7 Dynamic breaking unit (DBU) and Resistors....606
11.7.1 Dynamic breaking unit (DBU)....606
11.7.2 Terminal arrangement....608
11.7.3 Dynamic Breaking (DB)Unit & DB resistor basic wiring....611
11.7.4 Dimensions....612
11.7.5 Display Functions....616
11.7.6 DB Resistors....616
11.8 Inverter Continuous Rated Current Derating....618
12 Applying Drives to Single-phase Input Application....622
12.1 Introduction....622
12.2 Power(HP), Input Current and Output Current....623
12.3 Input Frequency and Voltage Tolerance....624
12.4 Wiring....625
12.5 Precautions for 1–phase input to 3-phase drive....625
Product Warranty....626
UL mark....628
EAC mark....628
Index....633

www.nicsanat.com
021-87700210
NIC SANAT
نیک صنعت

1 Preparing the Installation

This chapter provides details on product identification, part names, correct installation and cable specifications. To install the inverter correctly and safely, carefully read and follow the instructions.

1.1 Product Identification

The H100 Inverter is manufactured in a range of product groups based on drive capacity and power source specifications. Product name and specifications are detailed on the rating plate. Check the rating plate before installing the product and make sure that the product meets your requirements. For more detailed product specifications, refer to *11.1 Input and Output Specifications* on page *585*.

Note

Check the product name, open the packaging, and then confirm that the product is free from defects. Contact your supplier if you have any issues or questions about your product.

www.nicsanat.com
021-87700210
NIC SANAT
نیک صنعت

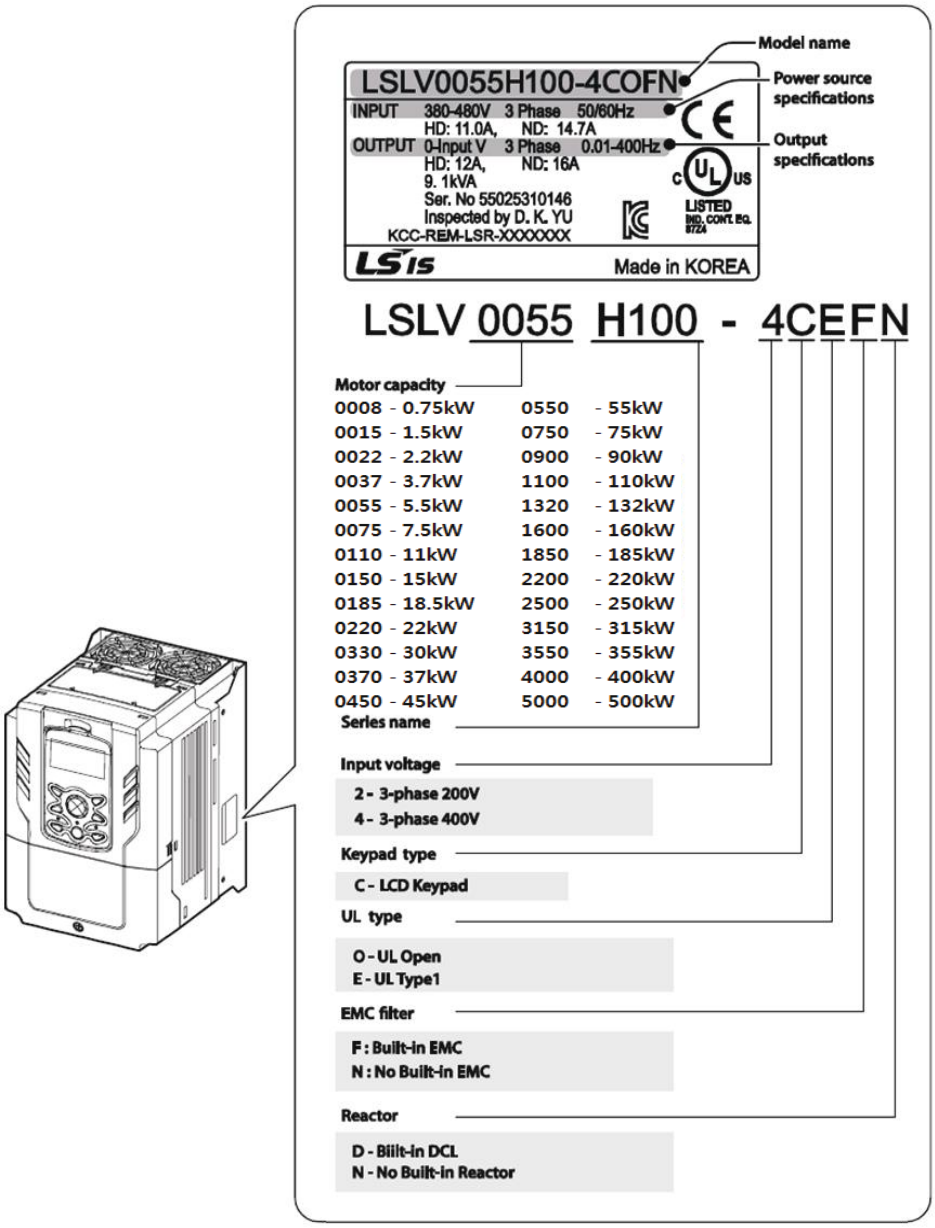

Note

The H100 75/90 kW, 400 V inverters satisfy the EMC standard EN61800-3 without installation of optional EMC filters.

1.2 Part Names

The illustration below displays part names. Details may vary between product groups.

0.75–30 kW (3-Phase)

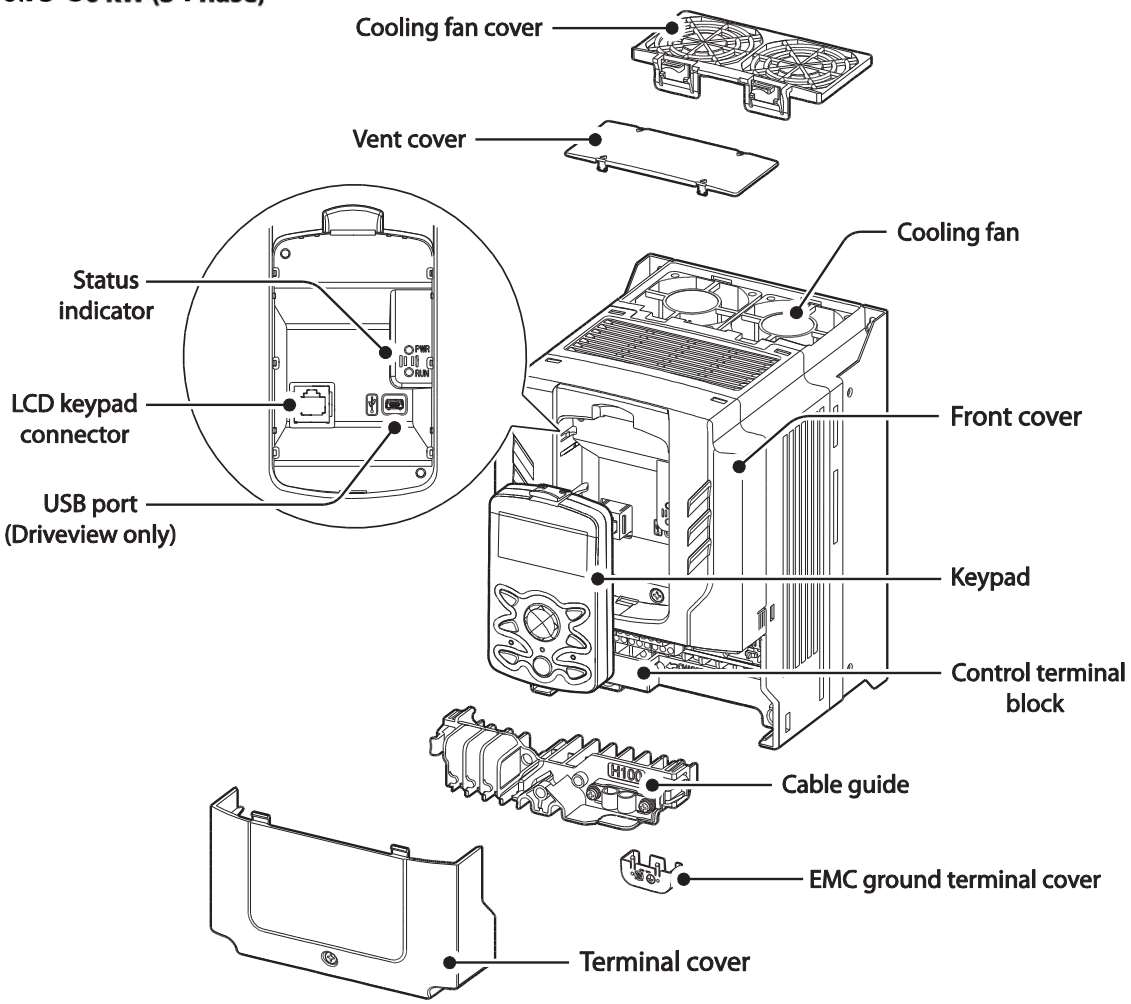

www.nicsanat.com
021-87700210
NIC SANAT
نیک صنعت

37–90 kW (3-Phase)

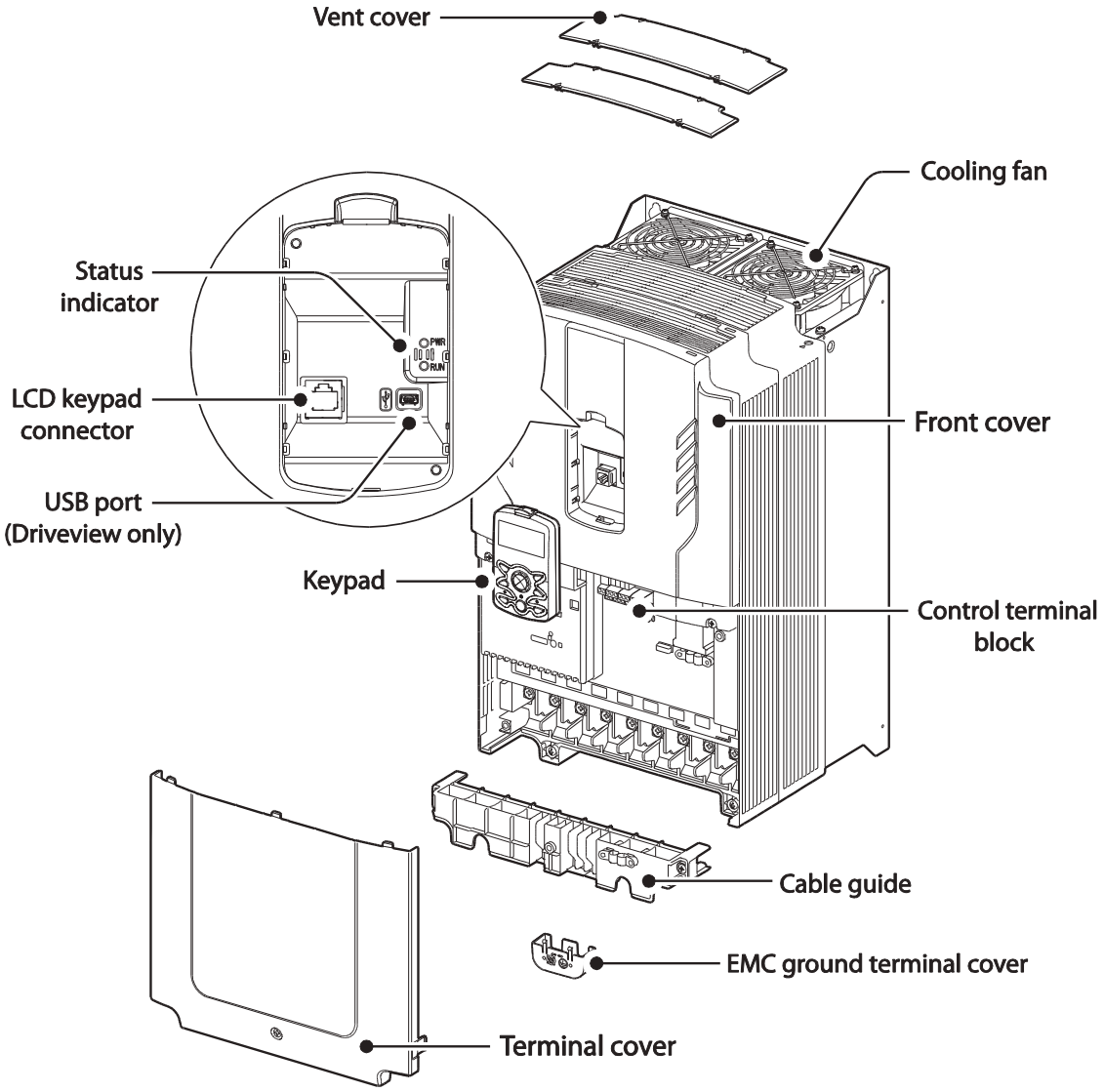

www.nicsanat.com
021-87700210
NIC SANAT
نیک صنعت

110–132 kW (3-Phase)

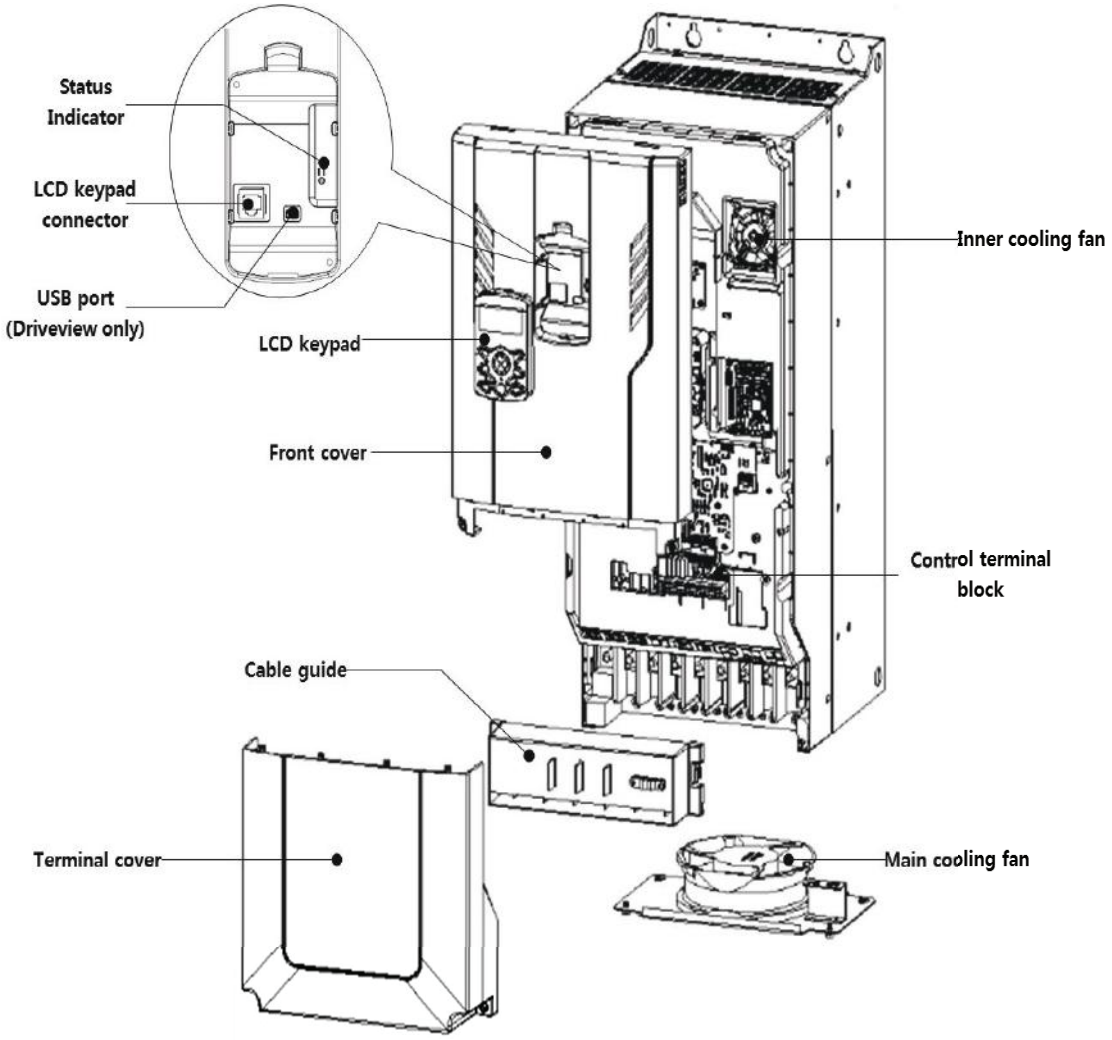

www.nicsanat.com
021-87700210
NIC SANAT
نیک صنعت

160–185 kW (3-Phase)

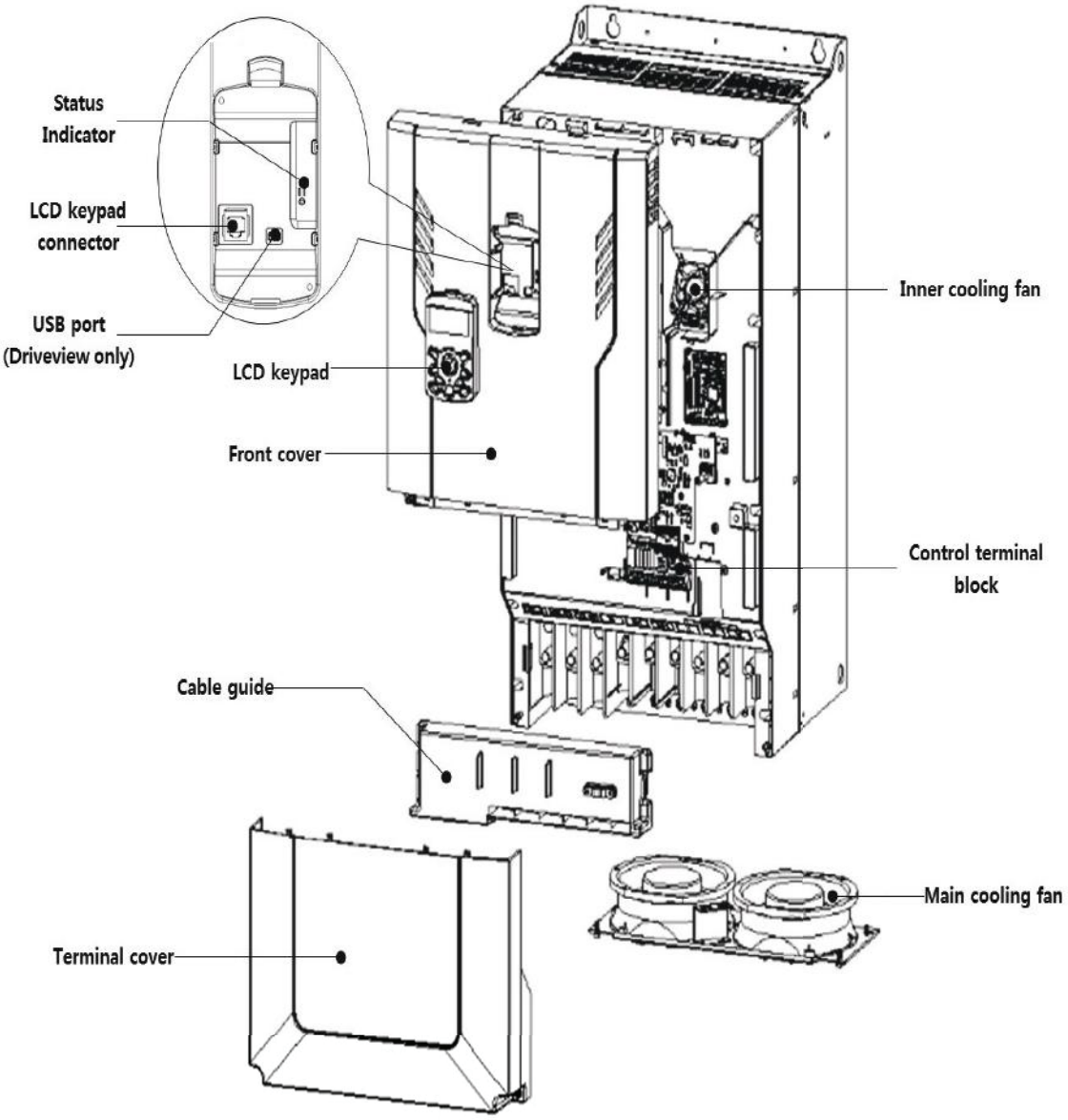

www.nicsanat.com
021-87700210
NIC SANAT
نیک صنعت

220–250 kW (3-Phase)

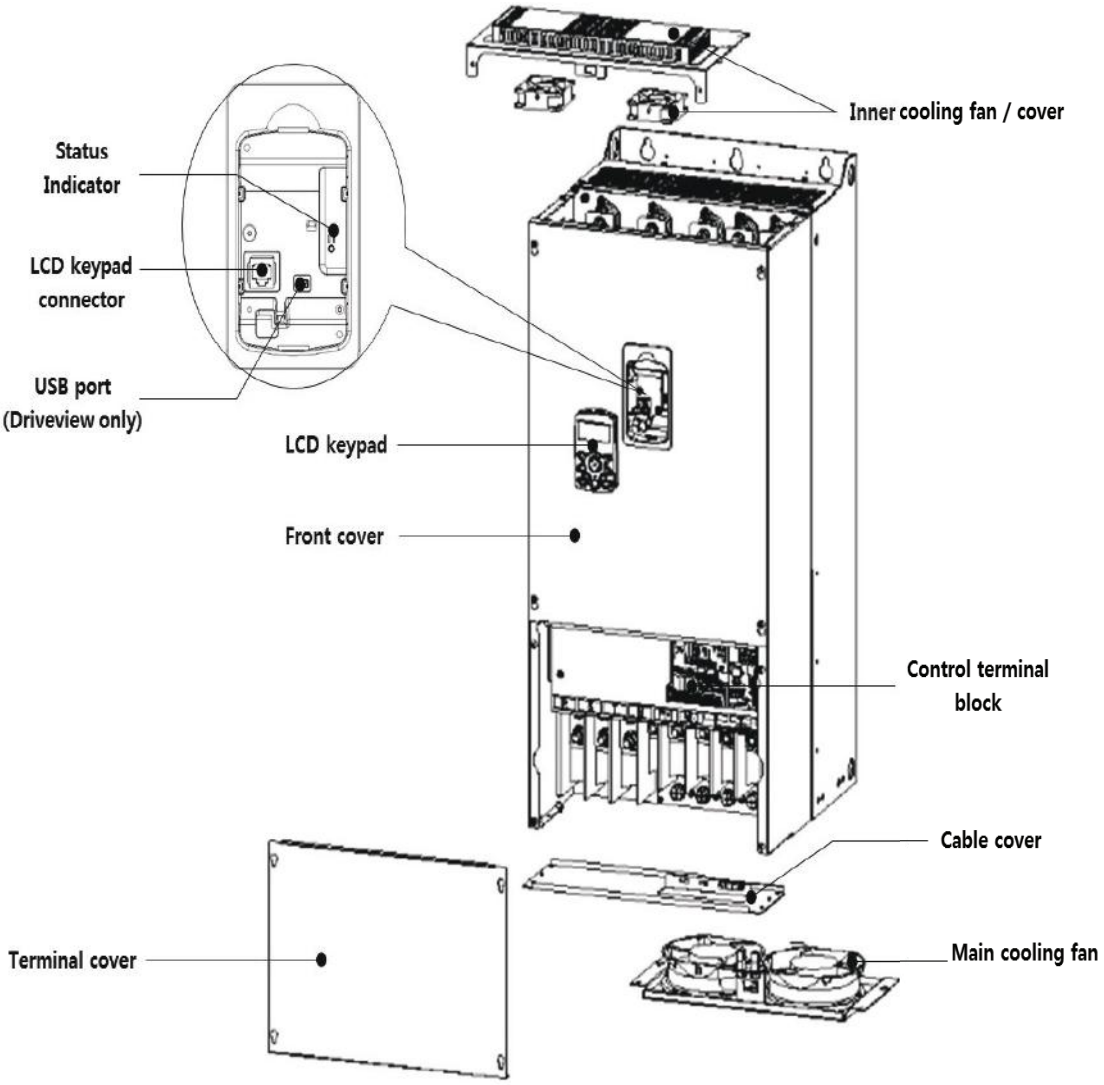

www.nicsanat.com
021-87700210
NIC SANAT
نیک صنعت

315–400 kW (3-Phase)

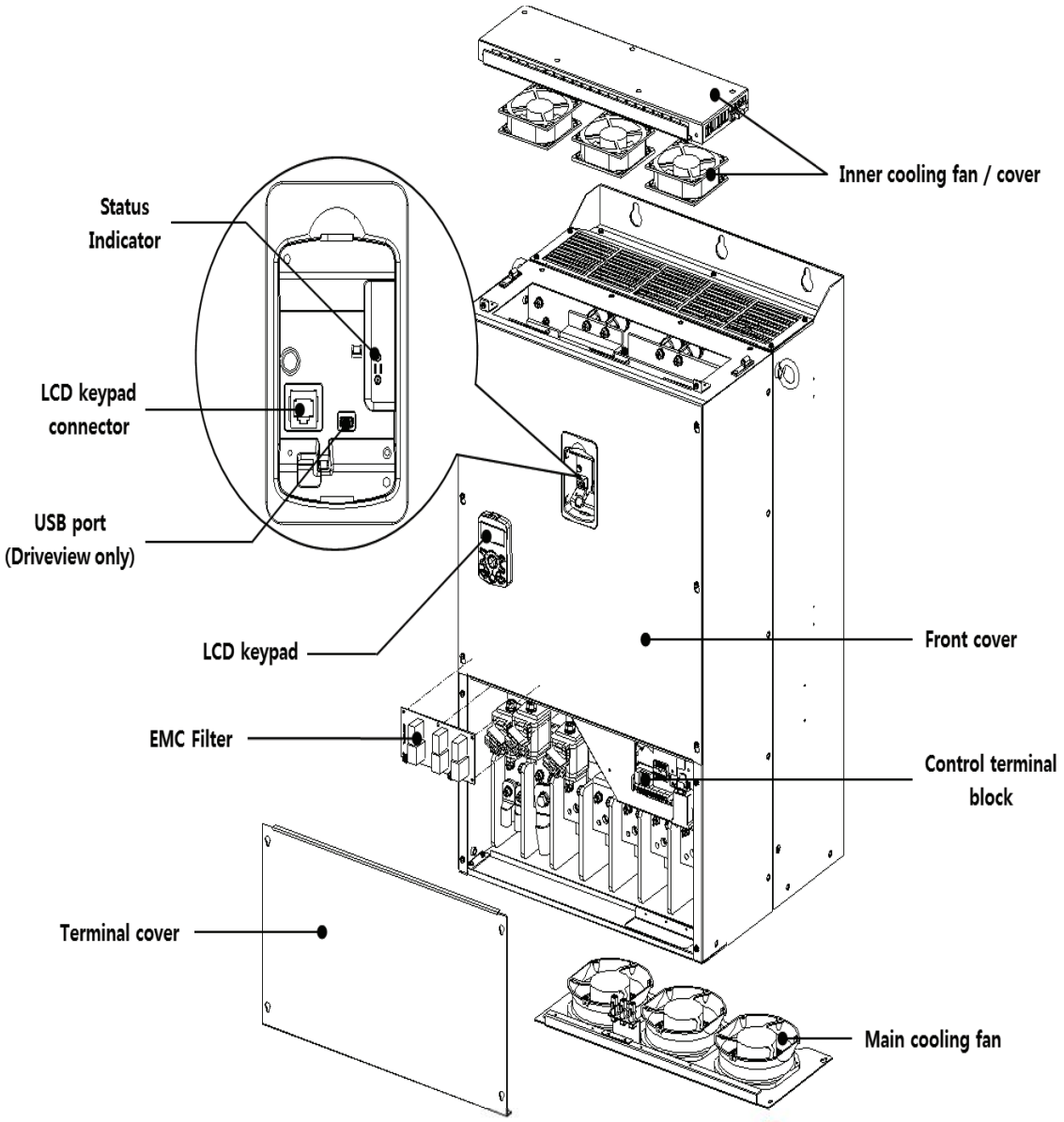

www.nicsanat.com
021-87700210
NIC SANAT
نیک صنعت

500 kW (3-Phase)

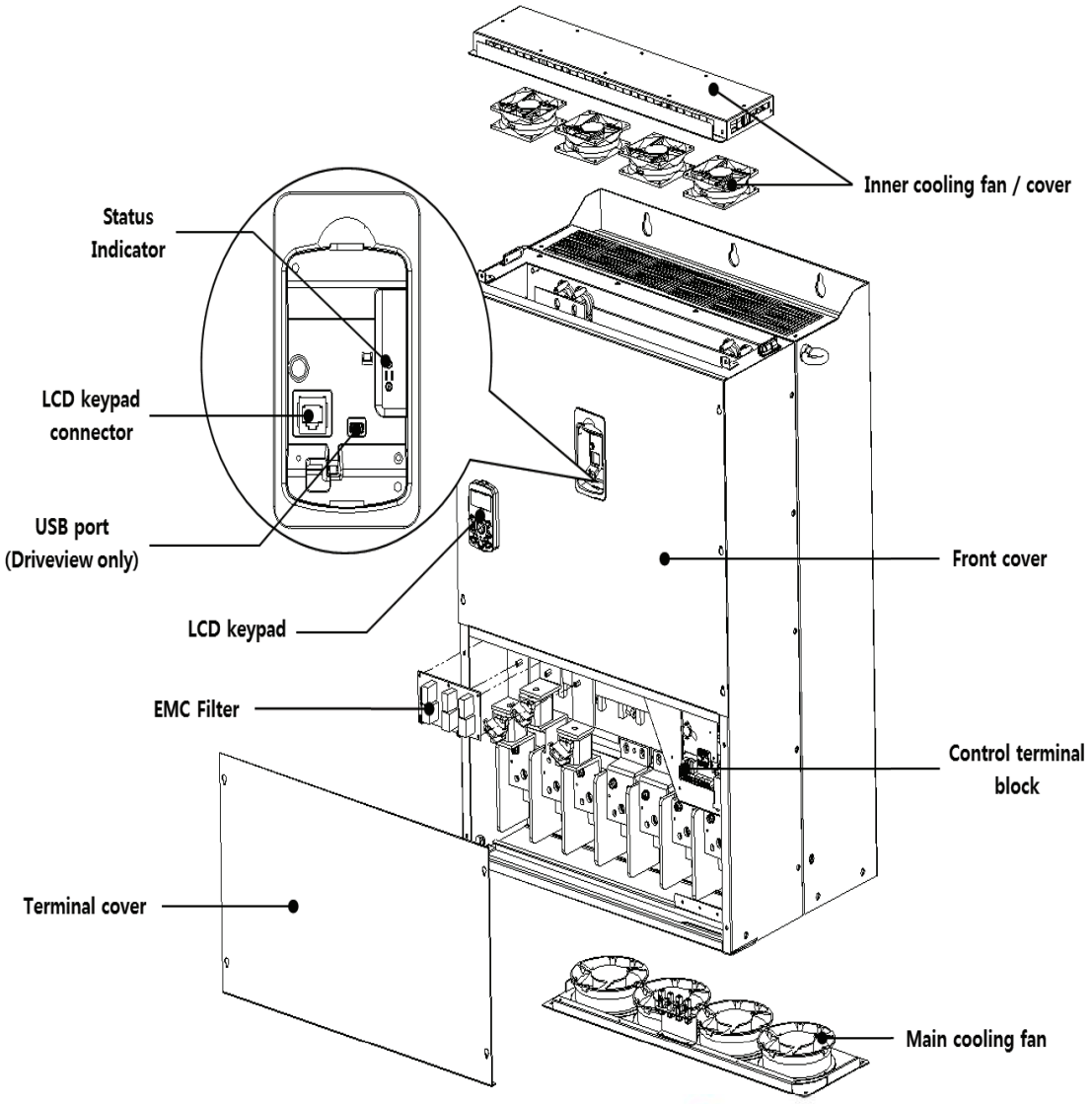

www.nicsanat.com
021-87700210
NIC SANAT
نیک صنعت

1.3 Installation Considerations

Inverters are composed of various precision, electronic devices, and therefore the installation environment can significantly impact the lifespan and reliability of the product. The table below details the ideal operation and installation conditions for the inverter.

Items	Description
Ambient Temperature*	-10 °C–50 °C (40 °C and above, 2.5% / °C Current Derating search. 50 °C 75% of the rated current of the drive if possible)
Ambient Humidity	95% relative humidity (no condensation)
Storage Temperature	- 4–149 °F (-20–65 °C)
Environmental Factors	An environment free from corrosive or flammable gases, oil residue or dust
Altitude	Maximum 3,280 ft (1,000m) above sea level for standard operation. After that the driver rated voltage and the rated output current derating by 1% for every extra 328 ft (100m) up to 13,123 ft (4,000m).
Vibration	less than 1.0 G (9.8m/sec^2)
Air Pressure	70 –106 kPa

* The ambient temperature is the temperature measured at a point 2" (5 cm) from the surface of the inverter.

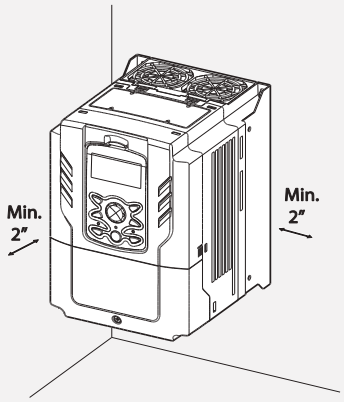

Caution

Do not allow the ambient temperature to exceed the allowable range while operating the inverter.

1.4 Selecting and Preparing a Site for Installation

When selecting an installation location consider the following points:

- The inverter must be installed on a wall that can support the inverter's weight.
- The location must be free from vibration. Vibration can adversely affect the operation of the inverter.
- The inverter can become very hot during operation. Install the inverter on a surface that is fire-resistant or flame-retardant and with sufficient clearance around the inverter to allow air to circulate. The illustrations below detail the required installation clearances.

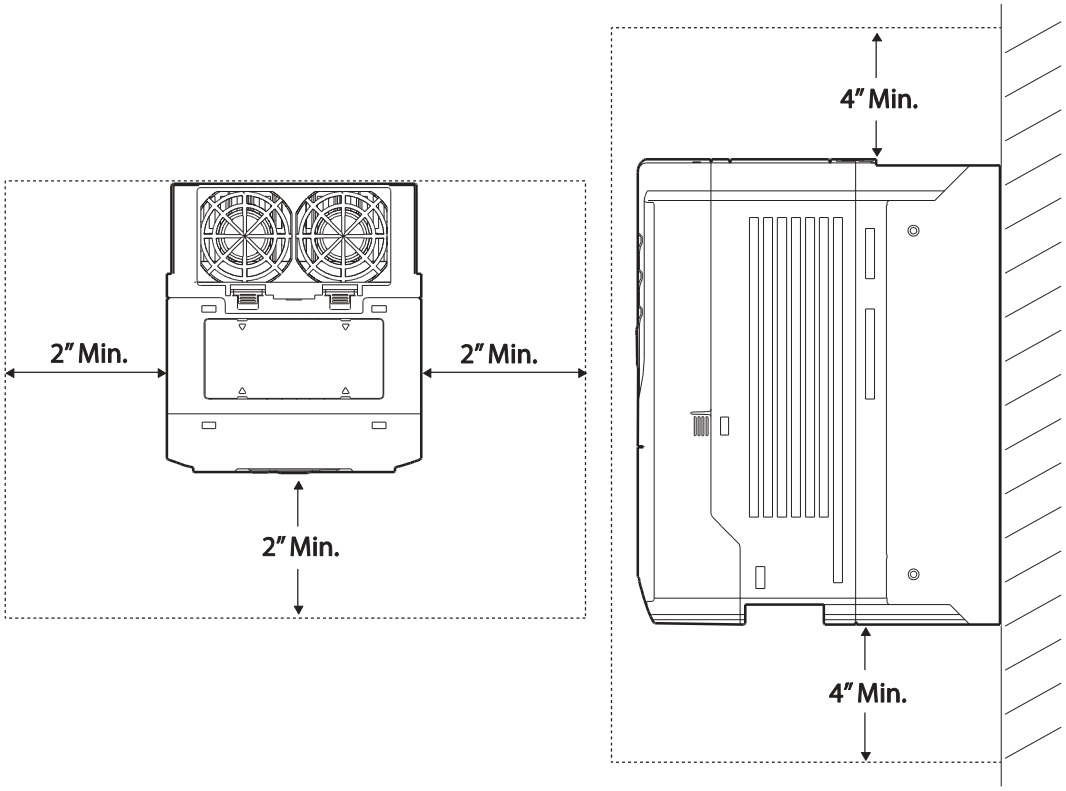

www.nicsanat.com
021-87700210
NIC SANAT
نیک صنعت

- Ensure sufficient air circulation is provided around the inverter when it is installed. If the inverter is to be installed inside a panel, enclosure, or cabinet rack, carefully consider the position of the inverter's cooling fan and the ventilation louver. The cooling fan must be positioned to efficiently transfer the heat generated by the operation of the inverter.

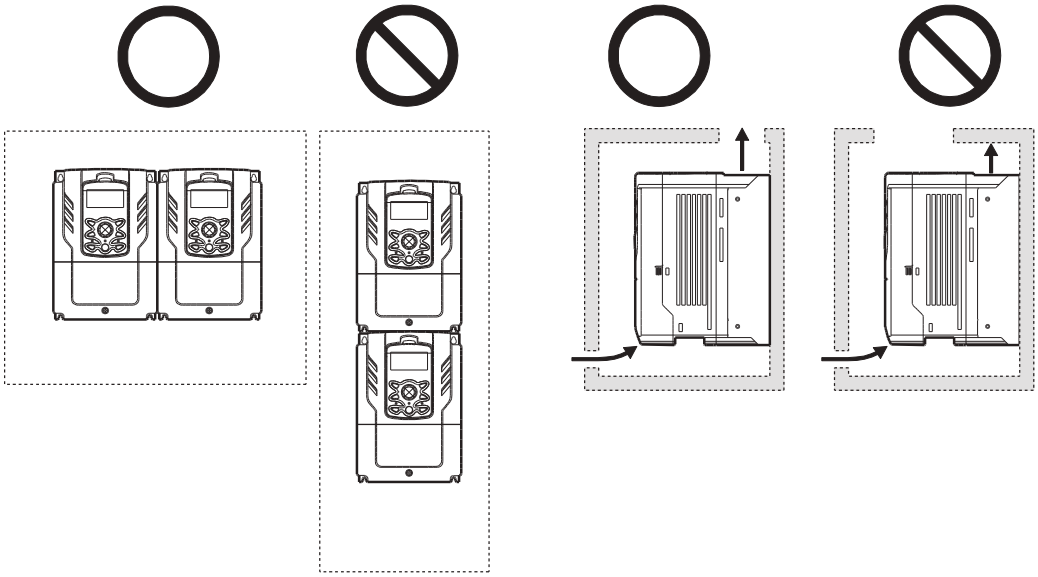

- If you are installing multiple inverters in one location, arrange them side-by-side and remove the vent covers. Use a flat head screwdriver to remove the vent covers. Only the H100 inverters rated for up to 30 kW may be installed side-by-side.

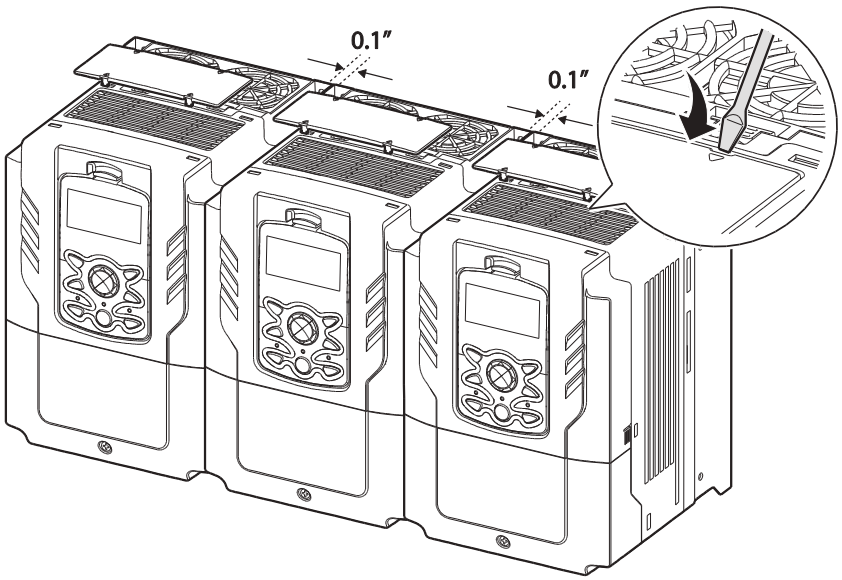

Note

- The vent covers must be removed for side-by-side installations.
- Side-by-side installation cannot be used for the H100 inverters rated for 37 kW and above.
- For the H100 inverters rated for 37 kW and above, if the installation site satisfies the UL Open Type requirements and there is no danger of foreign objects getting inside the inverter and causing trouble, the vent cover may be removed to improve cooling efficiency.

- If you are installing multiple inverters of different ratings, provide sufficient clearance to meet the clearance specifications of the larger inverter.The H100 inverters rated for up to 30 kW may be installed side-by-side.

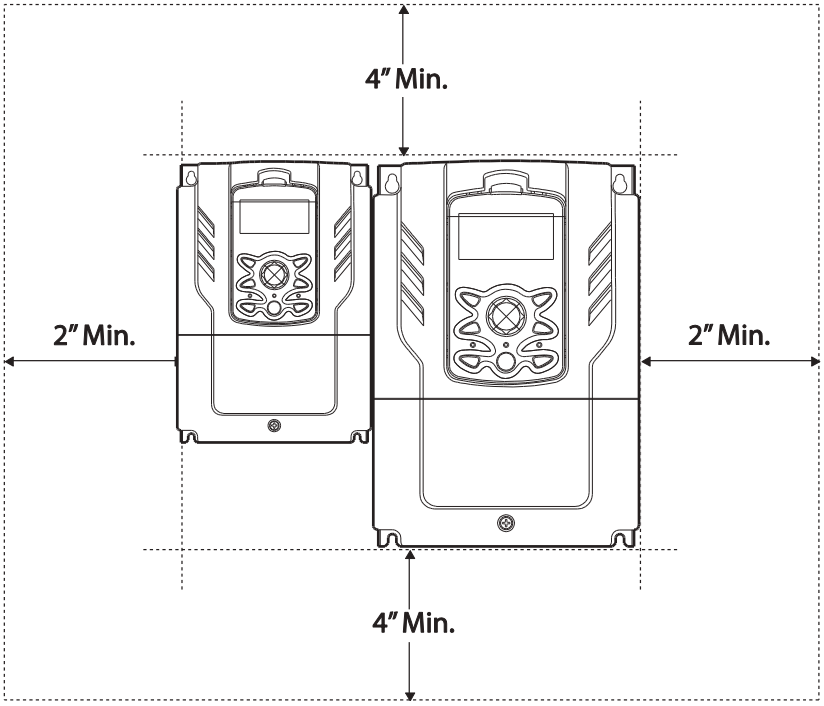

www.nicsanat.com
021-87700210
NIC SANAT
نیک صنعت

1.5 Cable Selection

When you install power and signal cables in the terminal blocks, only use cables that meet the required specification for the safe and reliable operation of the product. Refer to the following information to assist you with cable selection.

Caution

- Wherever possible use cables with the largest cross-sectional area for mains power wiring, to ensure that voltage drop does not exceed 2%.
- Use copper cables rated for 600 V, 75 ℃ for power terminal wiring.
- Use copper cables rated for 300 V, 75 ℃ for control terminal wiring.
- The inverters in the range between 15 and 90 kW must be grounded conveniently with fixed connections.
- The inverters in the range between 5,5kW and 11kW must be grounded with and industrial connector according to IEC 60309.
- The minimum size of the protective earthing conductor shall comply with the local safety regulations for high protective earthing conductor current equipment.
- Only one conductor per terminal should be simultaneously connected

Ground Cable and Power Cable Specifications

<table>
<tr><th colspan="2" rowspan="3">Load (kW)</th><th colspan="2">Ground Wire</th><th colspan="4">Input/Output Power Wire</th></tr>
<tr><th rowspan="2">mm²</th><th rowspan="2">AWG</th><th colspan="2">mm²</th><th colspan="2">AWG</th></tr>
<tr><th>R/S/T</th><th>U/V/W</th><th>R/S/T</th><th>U/V/W</th></tr>
<tr><td rowspan="9">3-Phase 200 V</td><td>0.75</td><td rowspan="4">3.5</td><td rowspan="4">12</td><td rowspan="3">1.5</td><td rowspan="3">1.5</td><td rowspan="3">16</td><td rowspan="3">16</td></tr>
<tr><td>1.5</td></tr>
<tr><td>2.2</td></tr>
<tr><td>3.7</td><td>2.5</td><td>2.5</td><td>14</td><td>14</td></tr>
<tr><td>5.5</td><td rowspan="3">10</td><td rowspan="3">10</td><td>4</td><td>4</td><td>12</td><td>12</td></tr>
<tr><td>7.5</td><td>6</td><td>6</td><td>10</td><td>10</td></tr>
<tr><td>11</td><td>10</td><td>10</td><td>8</td><td>8</td></tr>
<tr><td>15</td><td rowspan="2">14</td><td rowspan="2">6</td><td>16</td><td>16</td><td>6</td><td>6</td></tr>
<tr><td>18.5</td><td>25</td><td>22</td><td>4</td><td>4</td></tr>
<tr><td>3-Phase 400 V</td><td>0.75</td><td>2</td><td>14</td><td>1.5</td><td>1.5</td><td>16</td><td>16</td></tr>
</table>

Load (kW)		Ground Wire		Input/Output Power Wire			
		mm²	AWG	mm²		AWG	
				R/S/T	U/V/W	R/S/T	U/V/W
	1.5						
	2.2						
	3.7						
	5.5	4	12	2.5	2.5	14	14
	7.5			4	2.5	12	14
	11			4	4	12	12
	15	16	9	6	6	10	10
	18.5			16	10	6	8
	22	14	6	16	10	6	8
	30			25	16	4	6
	37	25	4	25	25	4	4
	45			25	25	4	4
	55			50	50	1/0	1/0
	75	38	2	70	70	1/0	1/0
	90			70	70	1/0	1/0
	110	50X2	1X2	70X2	70X2	-	-
	132			95X2	95X2	-	-
	160	50X2 70X2	1/0 x2	95X2	95X2	-	-
	185	70x2 95x2	3/0 x2	120X2	120X2	-	-
	220	95x2	250x2	150X2	150X2	-	-
	250		300 x2	185X2	185X2	-	-
	315	60X4 150X2	2/0 x4,	120X4, 400X2	120X4, 400X2	-	-
	355	70X4 150X2	3/0 x4	120X4, 400X2	120X4, 400X2	-	-
	400	95X4 200X2	4/0 x4	120X4, 400X2	120X4, 400X2	-	-
	500	120X4 350X2	4/0 x4 750X2	185X4, 630X2	185X4, 630X2	-	-

* Lugs of the field wiring must be UL approved.

Signal (Control) Cable Specifications

P1–P7/CM/VR/V1/I2/24/TI	0.33–1.25	16–22
AO1/AO2/CM/Q1/EG	0.33–2.0	14–22
A1/B1/C1/A2/C2/A3/C3/A4/C4/A5/C5	0.33–2.0	14–22
S+,S-,SG	0.75	18

1) Use STP (shielded twisted-pair) cables for signal wiring.

www.nicsanat.com
021-87700210
NIC SANAT
نیک صنعت

2 Installing the Inverter

This chapter describes the physical and electrical installation of the H100 series inverters, including mounting and wiring of the product. Refer to the flowchart and basic configuration diagram provided below to understand the procedures and installation instructions to be followed to install the product correctly.

Installation Flowchart

The following flowchart lists the sequence to be followed during installation. The steps cover equipment installation and testing of the product. More information on each step is referenced in the steps.

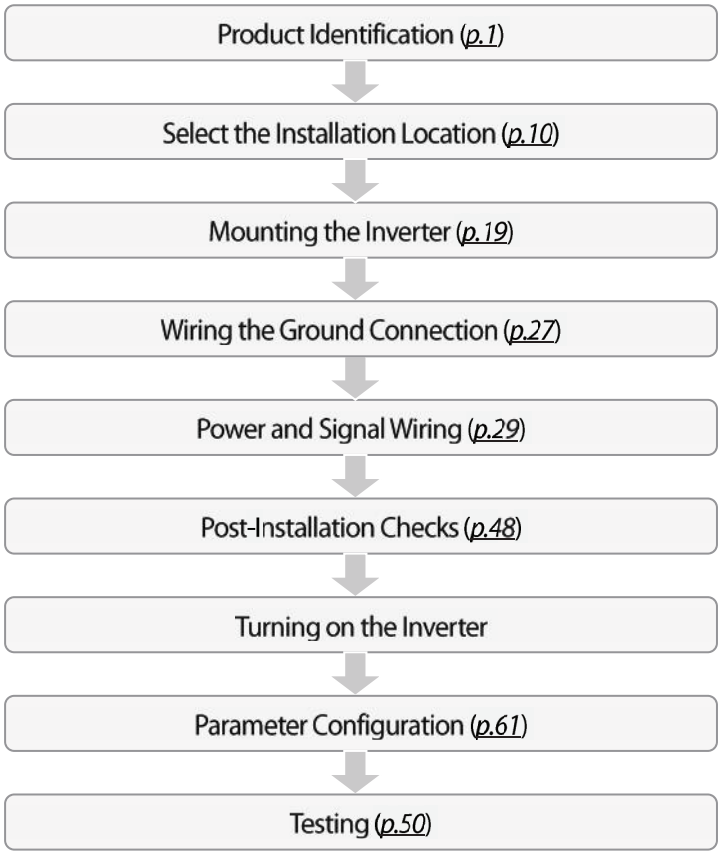

Basic configuration diagram

The reference diagram below shows a typical system configuration showing the inverter and peripheral devices.

Prior to installing the inverter, ensure that the product is suitable for the application (power rating, capacity, etc). Ensure that all of the required peripherals and optional devices (resistor brakes, contactors, noise filters, etc.) are available. For more details on peripheral devices, refer to *11.4 Peripheral Devices* on page *600*.

200[V] : 0.75~18.5kW, 400[V] : 0.75~90kW

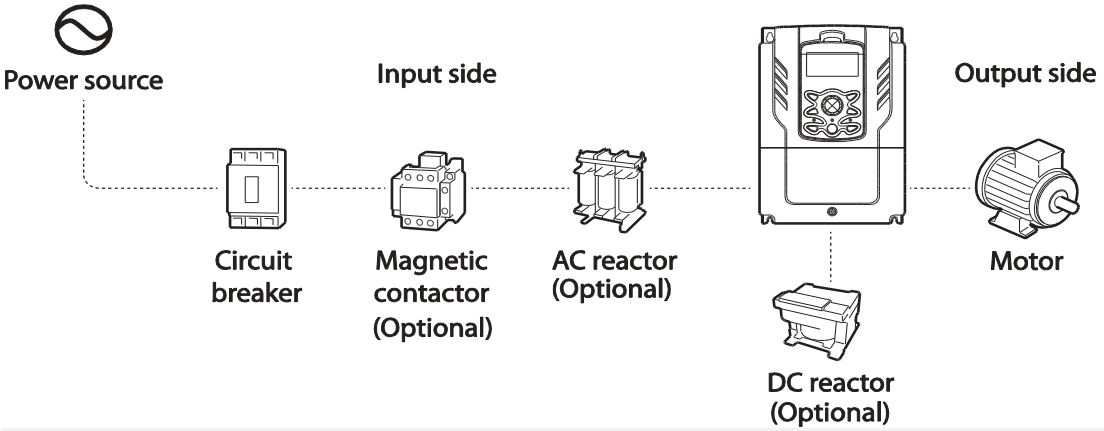

400[V] : 110~500kW

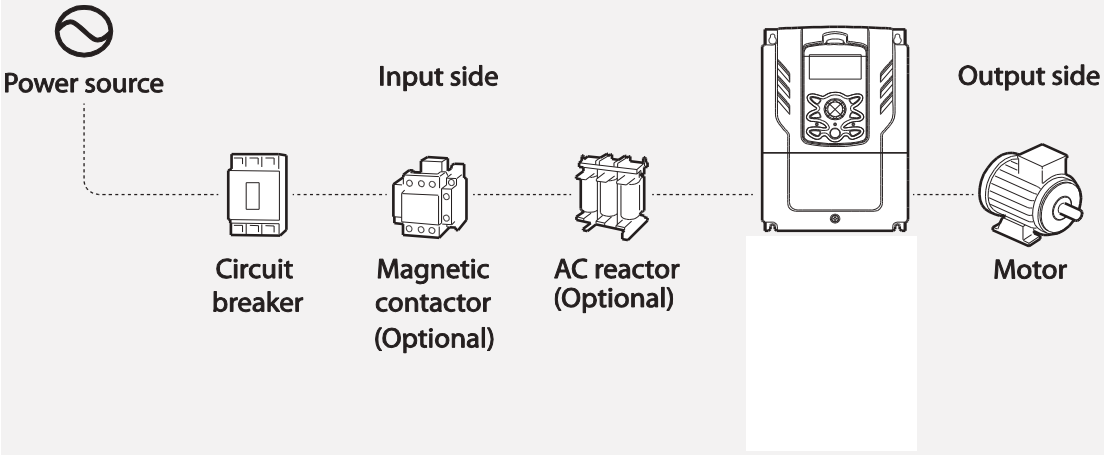

Caution

- Figures in this manual are shown with covers or circuit breakers removed to show a more detailed view of the installation arrangements. Install covers and circuit breakers before operating the inverter. Operate the product according to the instructions in this manual.
- Do not start or stop the inverter using a magnetic contactor installed on the input power supply.
- If the inverter is damaged and loses control, the machine may cause a dangerous situation. Install an additional safety device such as an emergency brake to prevent these situations.
- High levels of current draw during power-on can affect the system. Ensure that correctly rated circuit breakers are installed to operate safely during power-on situations.
- Reactors can be installed to improve the power factor. Note that reactors may be installed within 32.8 ft (10 m) from the power source if the input power exceeds 600 kVA. Refer to *11.5 Fuse and Reactors Specifications* on page *603* and carefully select a reactor that meets the requirements.

2.1 Mounting the Inverter

Mount the inverter on a wall or inside a panel following the procedures provided below. Before installation, ensure that there is sufficient space to meet the clearance specifications, and that there are no obstacles impeding the cooling fan's air flow.

Select a wall or panel suitable to support the installation. Refer to *11.3 External Dimensions* on page *595* and check the inverter's mounting bracket dimensions.

1. Use a level to draw a horizontal line on the mounting surface, and then carefully mark the fixing points.
2. Drill the two upper mounting bolt holes, and then install the mounting bolts. Do not fully tighten the bolts at this time. Fully tighten the mounting bolts after the inverter has been mounted.
3. Mount the inverter on the wall or inside a panel using the two upper bolts, and then fully tighten the upper mounting bolts.

200[V] : 0.75~18.5kW, 400[V] : 0.75~185kW

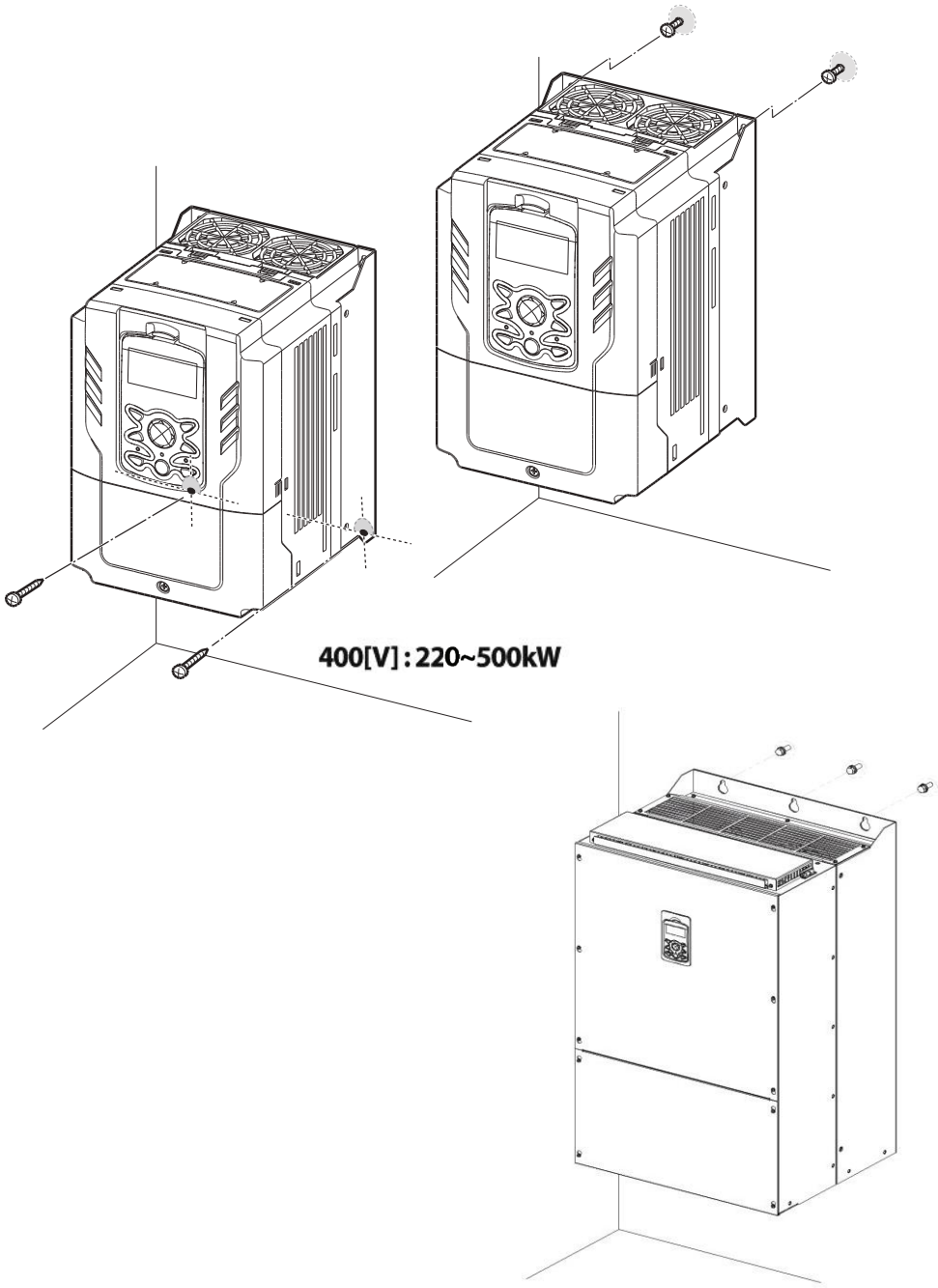

4 Install the two lower mounting bolts. Ensure that the inverter is placed flat on the mounting surface, and that the installation surface can securely support the weight of the inverter.

200[V] : 0.75~18.5kW, 400[V] : 0.75~185kW

400[V] : 220~500kW

www.nicsanat.com
021-87700210
NIC SANAT
نیک صنعت

Caution

- Do not transport the inverter by lifting with the inverter's covers or plastic surfaces. The inverter may tip over if covers break, causing injuries or damage to the product. Always support the inverter using the metal frames when moving it.
- Hi-capacity inverters are very heavy and bulky. Use an appropriate transport method that is suitable for the weight.
- Do not install the inverter on the floor or mount it sideways against a wall. The inverter must be installed vertically, on a wall or inside a panel, with its rear flat on the mounting surface.

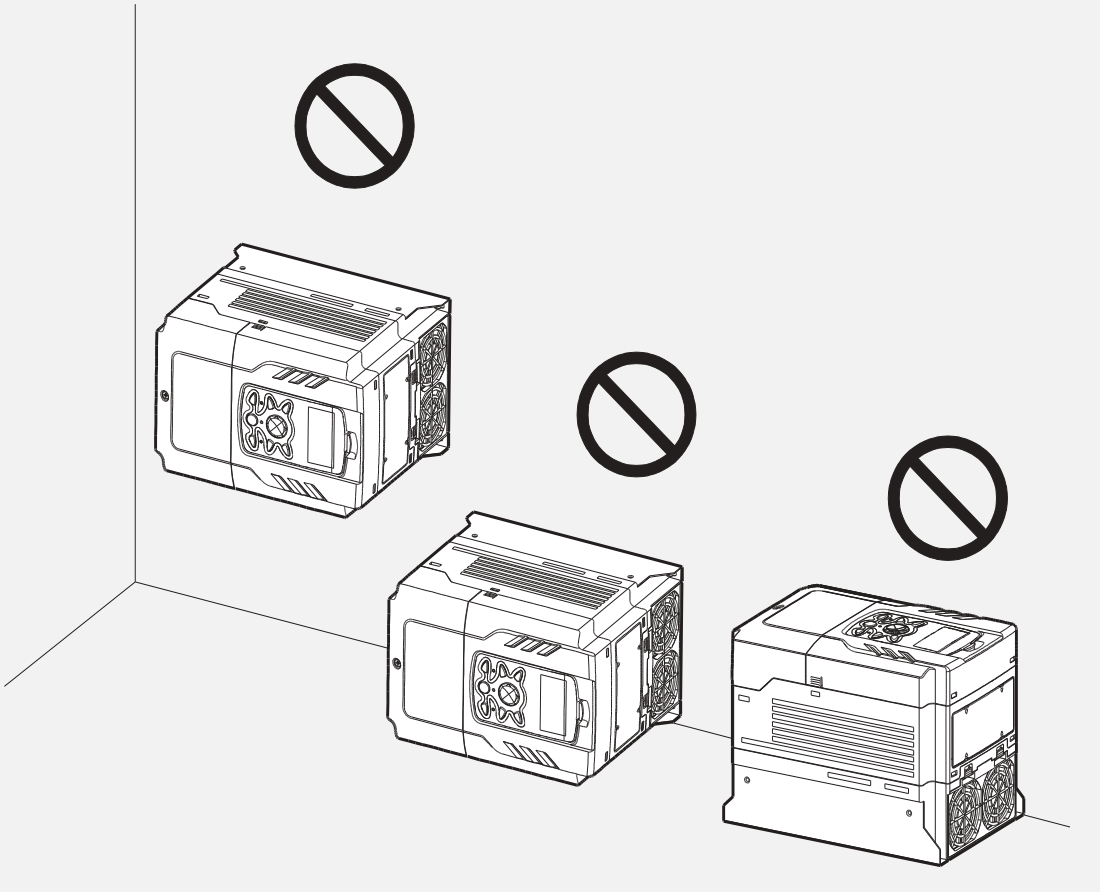

www.nicsanat.com
021-87700210
NIC SANAT
نیک صنعت

2.2 Enabling the RTC (Real-Time Clock) Battery

The H100 series inverter comes from the factory with a CR2032 lithium-manganese battery pre-installed on the I/O PCB. The battery powers the inverter's built-in RTC. The battery is installed with a protective insulation strip to prevent battery discharge; remove this protective film before installing and using the inverter.

Caution

ESD (Electrostatic discharge) from the human body may damage sensitive electronic components on the PCB. Therefore, be extremely careful not to touch the PCB or the components on the PCB with bare hands while you work on the I/O PCB.

To prevent damage to the PCB from ESD, touch a metal object with your hands to discharge any electricity before working on the PCB, or wear an anti-static wrist strap and ground it on a metal object.

Follow the instructions below to remove the protective insulation strip and enable the RTC feature on the H100 series inverters.

1 Turn off the inverter and make sure that DC link voltage has dropped to a safe level.

2 Loosen the screw on the power cover then remove the power cover.

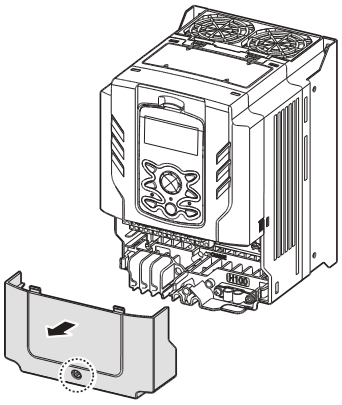

0.75–30 kW Models

110~185kW Models

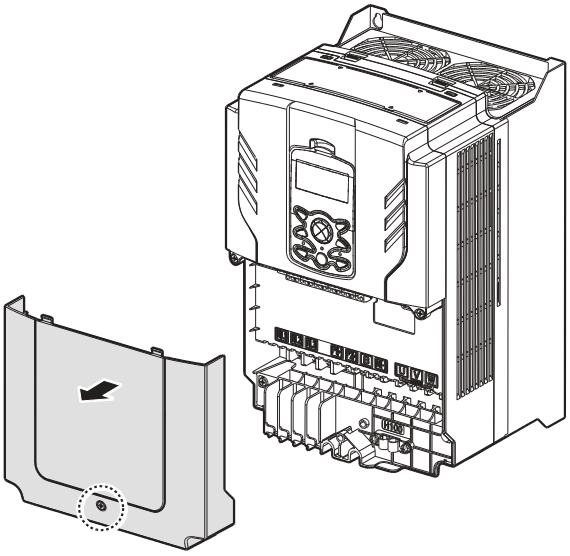

37–90 kW Models

220~500kW Models

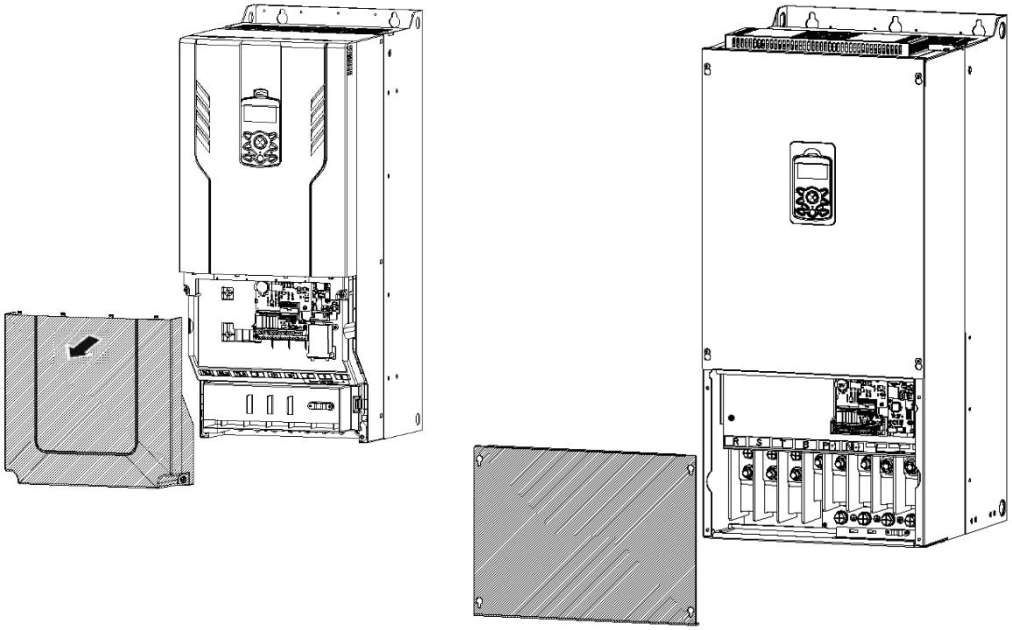

3 Remove the keypad from the inverter body.

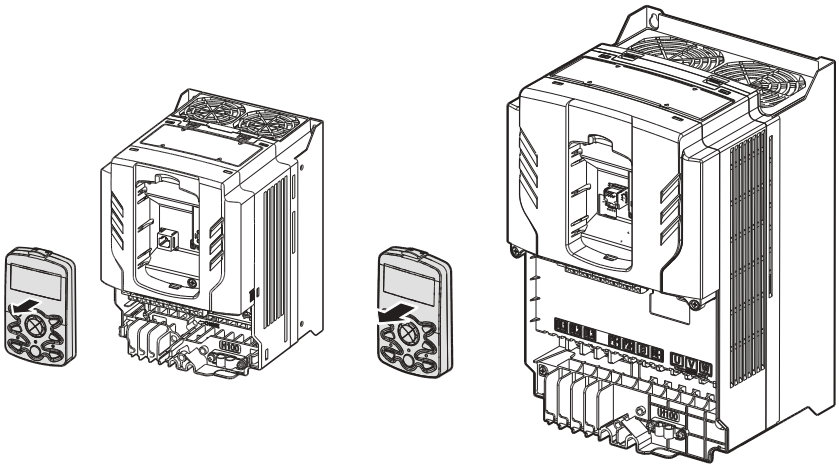

0.75–30 kW Models

37–90 kW Models

www.nicsanat.com
021-87700210
NIC SANAT
نیک صنعت

4 Loosen the screws securing the front cover, and remove the front cover by lifting it. The main PCB is exposed.

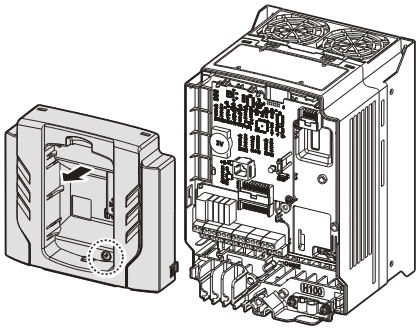

0.75–30 kW Models

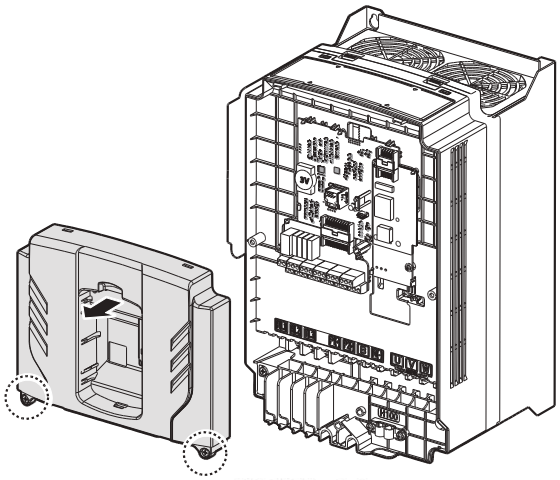

37–90 kW Models

5 Locate the RTC battery holder on the I/O PCB, and remove the protective insulation strip by gently pulling it.

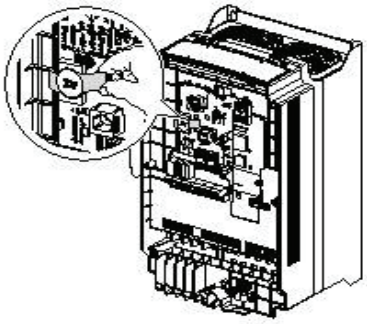

0.75-90kW Models

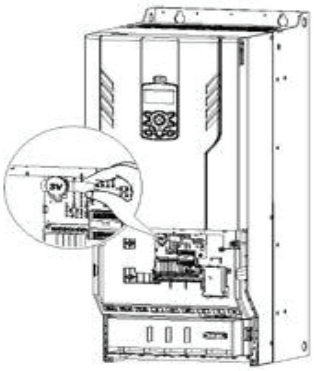

110-185kW Models

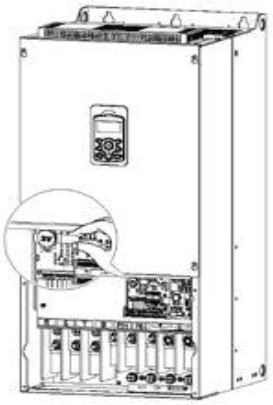

220-500kW Models

6 Reattach the front cover, the power cover, and the keypad back onto the inverter body

7 For detailed information on the RTC battery, refer to the battery specifications on page *580*.

Caution

Ensure that the inverter is turned off and DC link voltage has dropped to a safe level before opening the terminal cover and installing the RTC battery.

2.3 Cable Wiring

Open the terminal cover, remove the cable guides, and then install the ground connection as specified. Complete the cable connections by connecting an appropriately rated cable to the terminals on the power and control terminal blocks.

Read the following information carefully before carrying out wiring connections to the inverter. All warning instructions must be followed.

ⓘ Caution

- Install the inverter before carrying out wiring connections.
- Ensure that no small metal debris, such as wire clippings, remain inside the inverter. Metal debris in the inverter may cause inverter failure.
- Tighten terminal screws to their specified torque. Loose terminal block screws may allow the cables to disconnect and cause a short circuit or inverter failure. Refer to page 604.
- Do not place heavy objects on top of electric cables. Heavy objects may damage the cable and result in electric shock.
- Use cables with the largest cross-sectional area, appropriate for power terminal wiring, to ensure that voltage drops do not exceed 2%.
- Use copper cables rated at 600 V, 75 ℃ for power terminal wiring.
- Use copper cables rated at 300 V, 75 ℃ for control terminal wiring.
- If you need to re-wire the terminals due to wiring-related faults, ensure that the inverter keypad display is turned off and the charge lamp under the terminal cover is off before working on wiring connections. The inverter may hold a high voltage electric charge long after the power supply has been turned off.
- The accessible connections and parts listed below are of protective class 0. It means that the protection of these circuits relies only upon basic insulation and becomes hazardous in the event of a failure of the basic insulation. Therefore, devices connected to these circuits must provide electrical-shock protection as if the device was connected to supply mains voltage. In addition, during installation these parts must be considered, in relation with electrical-shock, as supply mains voltage circuits.

  [Class 0 circuits]

  ➔ MULTI FUNCTION INPUT : P1-P7, CM

  ➔ ANALOG INPUT : VR, V1, I2, TI

  ➔ ANALOG OUTPUT : AO1, AO2, TO

- CONTACT : Q1, EG, 24,A1, C1, B1, A2~5, C2~5, S+, S-, SG

Step 1 Terminal Cover and Cable Guide

The terminal cover and cable guide must be removed to install cables. Refer to the following procedures to remove the covers and cable guide. The steps to remove these parts may vary depending on the inverter model.

1 Loosen the bolt that secures the terminal cover. Then remove the cover by lifting it from the bottom and away from the front.

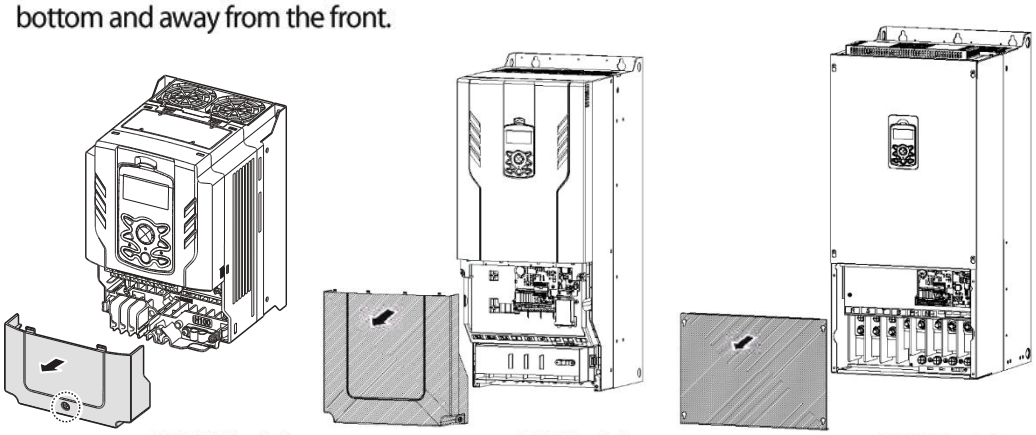

0.75–90 kW Models 110–185 kW Models 220–500 kW Models

2 Push and hold the levers on both sides of the cable guide (❶) and then remove the cable guide by pulling it directly away from the front of the inverter (❷). In some models (37~90kW) where the cable guide is secured by a bolt, remove the bolt first.

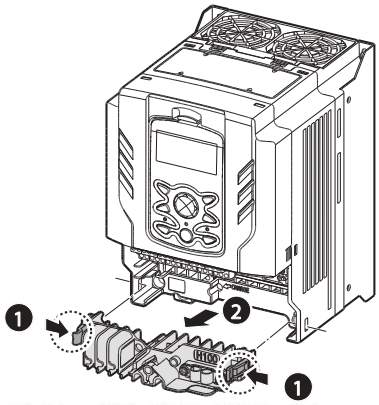

0.75~30 / 110~185 kW Models

3 Connect the cables to the power terminals and the control terminals. For cable specifications, refer to *1.5 Cable Selection* on page *14*.

Step 2 Ground Connection

Remove the terminal cover(s) and cable guide. Then follow the instructions below to install the ground connection for the inverter.

1 Locate the ground terminal and connect an appropriately rated ground cable to the terminals. Refer to *1.5 Cable Selection* on page *14* to find the appropriate cable specification for your installation.

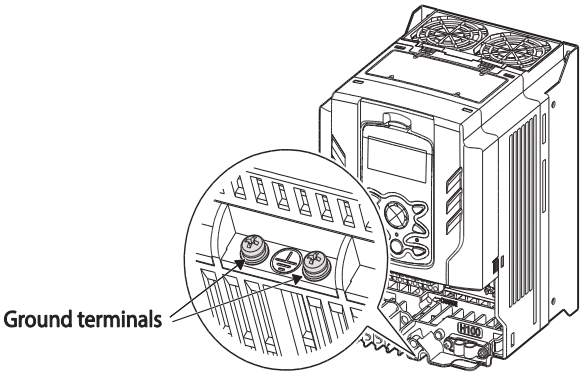

0.75–30 kW (3-Phase)

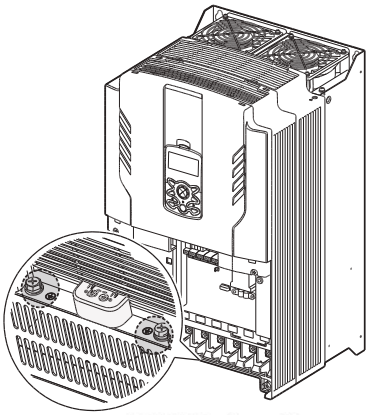

37–90 kW (3-Phase)

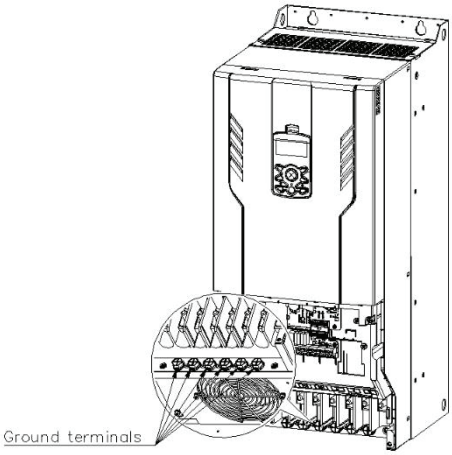

110~185kW (3-Phase)

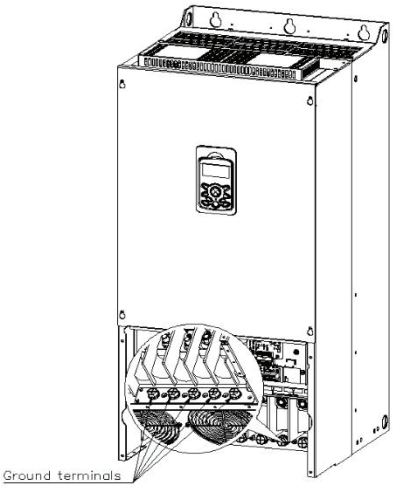

220-250kW (3-Phase)

www.nicsanat.com
021-87700210
NIC SANAT
نیک صنعت

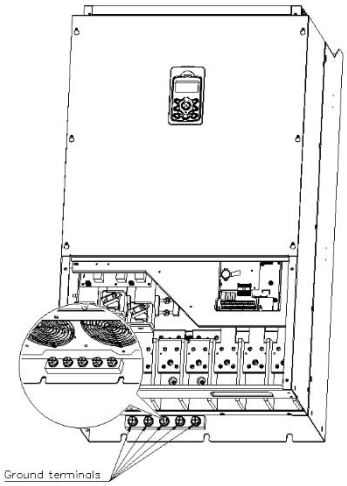

315~500kW (3-Phase)

2 Connect the other ends of the ground cables to the supply earth (ground) terminal

Note

- 200 V products require Class 3 grounding. Resistance to ground must be ≤ 100 Ω.
- 400 V products require Special Class 3 grounding. Resistance to ground must be ≤ 10 Ω.

⚠ Warning

Install ground connections for the inverter and the motor by following the correct specifications to ensure safe and accurate operation. Using the inverter and the motor without the specified grounding connections may result in electric shock.
This product can cause a D.C current in the protective earthing conductor. If a RCD or monitoring (RCM) device is used for protection, only RCD or RCM of Type B is allowed on supply side of this product.

Step 3 Power Terminal Wiring

The following illustration shows the terminal layout on the power terminal block. Refer to the detailed descriptions to understand the function and location of each terminal before making wiring connections. Ensure that the cables selected meet or exceed the specifications in *1.5 Cable Selection* on page *14* before installing them.

www.nicsanat.com
021-87700210
NIC SANAT
نیک صنعت

ⓘ Caution

- Apply rated torques to the terminal screws. Loose screws may cause short circuits and malfunctions. Tightening the screw too much may damage the terminals and cause short circuits and malfunctions.
- Use copper wires only with 600 V, 75 ℃ rating for the power terminal wiring, and 300 V, 75 ℃ rating for the control terminal wiring.
- Power supply wirings must be connected to the R, S, and T terminals. Connecting them to the U, V, W terminals causes internal damages to the inverter. Motor should be connected to the U, V, and W Terminals. Arrangement of the phase sequence is not necessary.
- Equipment must only be fitted to the closed electric operating areas.

Attention

- Appliquer des couples de marche aux vis des bornes. Des vis desserrées peuvent provoquer des courts-circuits et des dysfonctionnements. Ne pas trop serrer la vis, car cela risque d'endommager les bornes et de provoquer des courts-circuits et des dysfonctionnements.
- Utiliser uniquement des fils de cuivre avec une valeur nominale de 600 V, 90 ℃ pour le câblage de la borne d'alimentation, et une valeur nominale de 300 V, 75 ℃ pour le câblage de la borne de commande.
- Les câblages de l'alimentation électrique doivent être connectés aux bornes R, S et T. Leur connexion aux bornes U, V et W provoque des dommages internes à l'onduleur. Le moteur doit être raccordé aux bornes U, V et W. L'arrangement de l'ordre de phase n'est pas nécessaire.

www.nicsanat.com
021-87700210
NIC SANAT
نیک صنعت

0.75–30 kW (3-Phase)

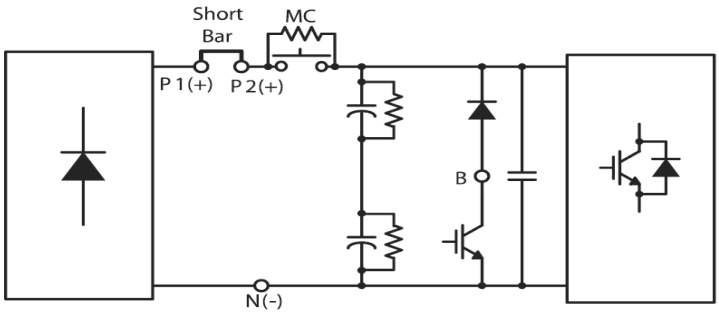

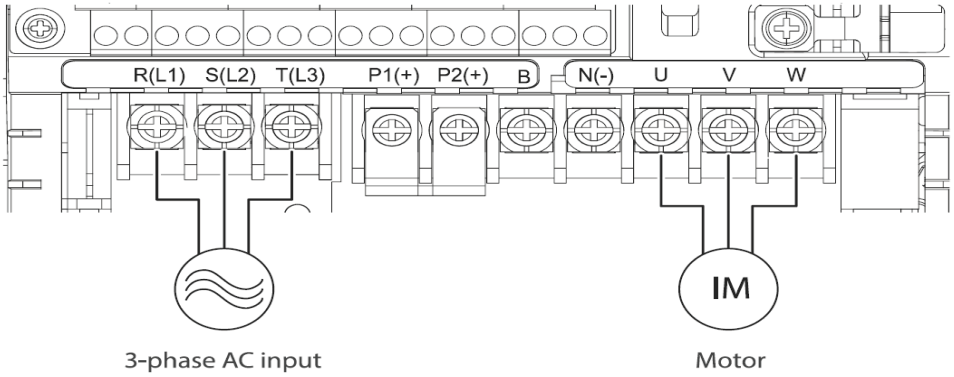

Power Terminal Labels and Descriptions

Terminal Labels	Name	Description
R(L1)/S(L2)/T(L3)	AC power input terminal	Mains supply AC power connections.
P1(+)	+ DC link terminal	+ DC voltage terminal. Used for connecting an external reactor.
P2(+)	+ DC link terminal	Used for DC power inverter DC (+) connection.
N-	- DC link terminal	- DC voltage terminal. Used for a DC power inverter DC (-) connection.
P2(+)/B	Brake resistor terminals	Brake resistor wiring connection.
U/V/W	Motor output terminals	3-phase induction motor wiring connections.

Note

Apply a DC input to the P2 (+) and N (-) terminals to operate the inverter on DC current input.

37–90 kW (3-Phase)

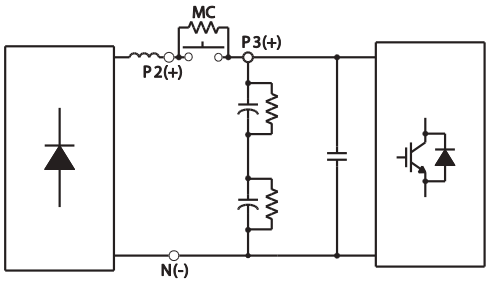

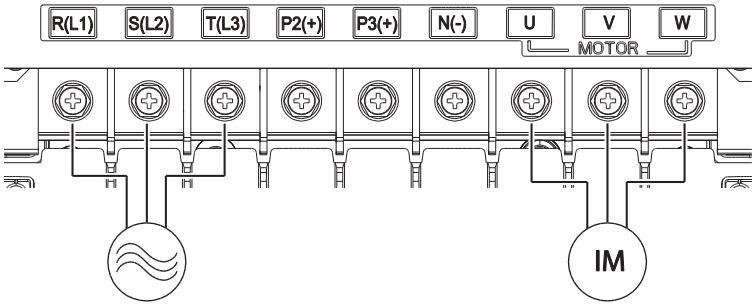

Power Terminal Labels and Descriptions

R(L1)/S(L2)/T(L3)	AC power input terminal	Mains supply AC power connections.
P2(+)	+ DC link terminal	+ DC voltage terminal. Used for connecting an external reactor.
P3(+)	+ DC link terminal	Used for a DC power inverter DC (+) connection.
N-	- DC link terminal	- DC voltage terminal. Used for a DC power inverter DC (-) connection.
U/V/W	Motor output terminals	3-phase induction motor wiring connections.

www.nicsanat.com
021-87700210
NIC SANAT
نیک صنعت

110–250kW (3-Phase)

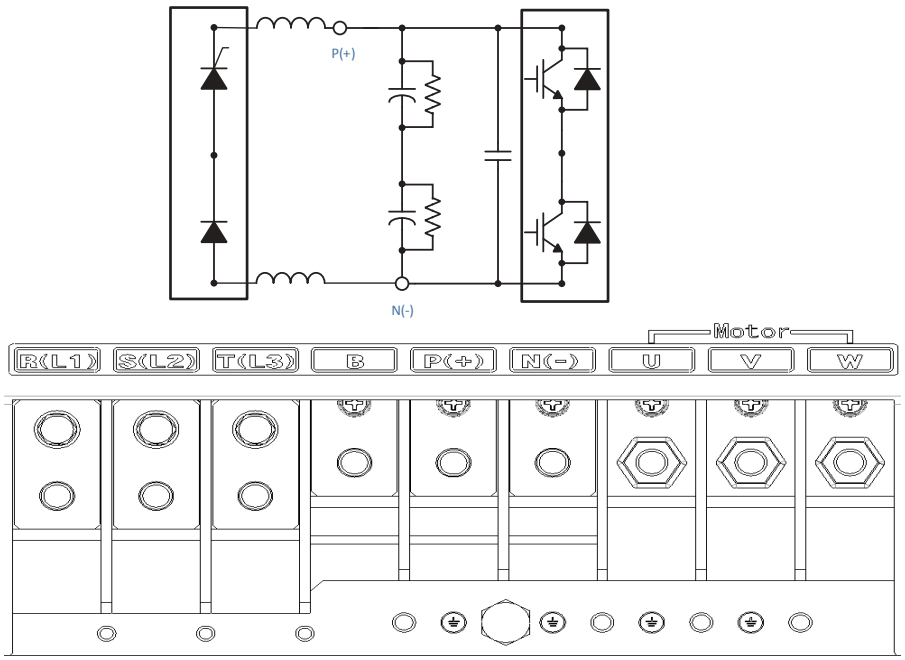

Power Terminal Labels and Descriptions

R(L1)/S(L2)/T(L3)	AC power input terminal	Mains supply AC power connections.
B	Brake resistor terminals	It can not be used because it does not provide a braking unit
P(+)	+ DC link terminal	+ DC voltage terminal.
N-	- DC link terminal	- DC voltage terminal. Used for a DC power inverter DC (-) connection.
U/V/W	Motor output terminals	3-phase induction motor wiring connections.

www.nicsanat.com
021-87700210
NIC SANAT
نیک صنعت

315–500kW (3-Phase)

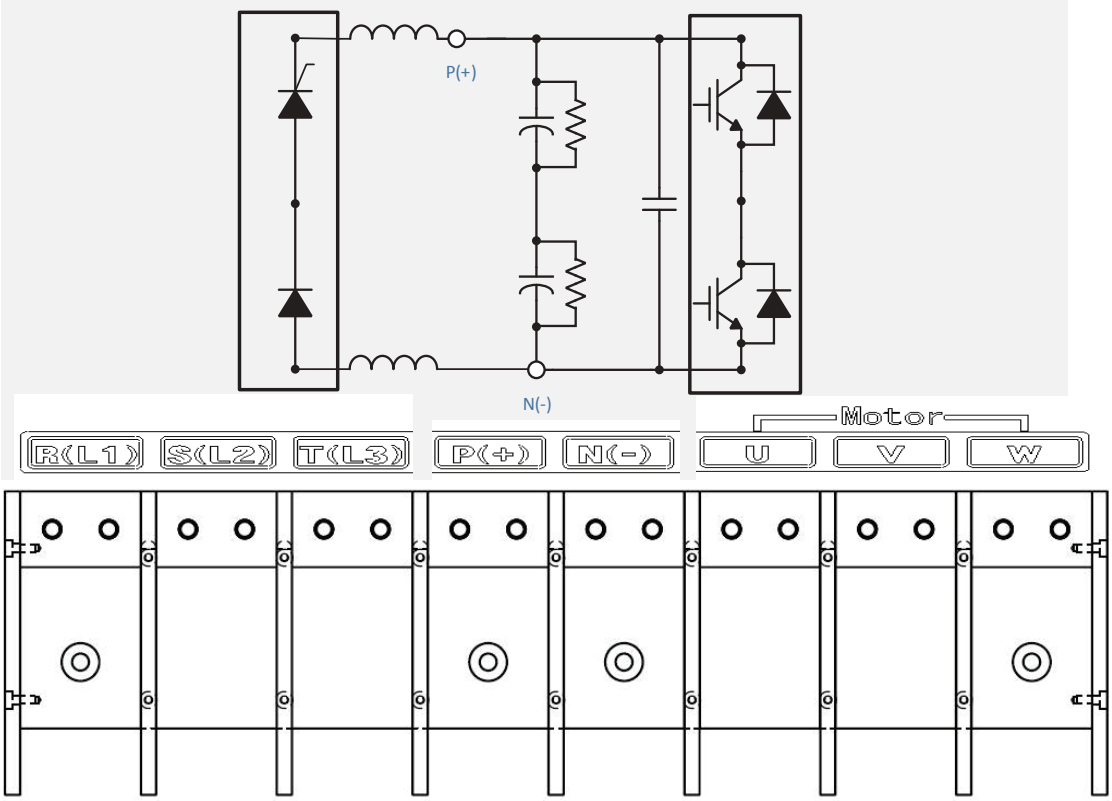

R(L1)/S(L2)/T(L3)	AC power input terminal	Mains supply AC power connections.
P(+)	+ DC link terminal	+ DC voltage terminal.
N-	- DC link terminal	- DC voltage terminal. Used for a DC power inverter DC (-) connection.
U/V/W	Motor output terminals	3-phase induction motor wiring connections.

www.nicsanat.com
021-87700210
NIC SANAT
نیک صنعت

Note

- Apply a DC input to the P2 (+) and N (-) terminals to operate the inverter on DC current input.
- Use STP (Shielded Twisted Pair) cables to connect a remotely located motor with the inverter. Do not use 3 core cables.
- Make sure that the total cable length does not exceed 492 ft (150 m). For inverters < = 3.7 kW capacity, ensure that the total cable length does not exceed 165 ft (50 m).
- Long cable runs can cause reduced motor torque in low frequency applications due to voltage drop. Long cable runs also increase a circuit's susceptibility to stray capacitance and may trigger over-current protection devices or result in malfunction of equipment connected to the inverter.
- Voltage drop is calculated by using the following formula:
- Voltage Drop (V) = [√3 X cable resistance (mΩ/m) X cable length (m) X current (A)] / 1000
- Use cables with the largest possible cross-sectional area to ensure that voltage drop is minimized over long cable runs. Lowering the carrier frequency and installing a micro surge filter may also help to reduce voltage drop.

Distance	< 165 ft (50 m)	< 330 ft (100 m)	> 330 ft (100 m)
Allowed Carrier Frequency	<15 kHz	<5 kHz	<2.5 kHz

⚠ Warning

Do not connect power to the inverter until installation has been fully completed and the inverter is ready to be operated. Doing so may result in electric shock.

ⓘ Caution

- Power supply cables must be connected to the R, S, and T terminals. Connecting power cables to other terminals will damage the inverter.
- Use insulated ring lugs when connecting cables to R/S/T and U/V/W terminals.
- The inverter's power terminal connections can cause harmonics that may interfere with other communication devices located near to the inverter. To reduce interference the installation of noise filters or line filters may be required.
- To avoid circuit interruption or damaging connected equipment, do not install phase-advanced condensers, surge protection, or electronic noise filters on the output side of the inverter.
- To avoid circuit interruption or damaging connected equipment, do not install magnetic contactors on the output side of the inverter.

www.nicsanat.com
021-87700210
NIC SANAT
نیک صنعت

Step 4 Control Terminal Wiring

The illustrations below show the detailed layout of control wiring terminals and control board switches. Refer to the detailed information provided below and *1.5 Cable Selection* on page *14* before installing control terminal wiring and ensure that the cables used meet the required specifications.

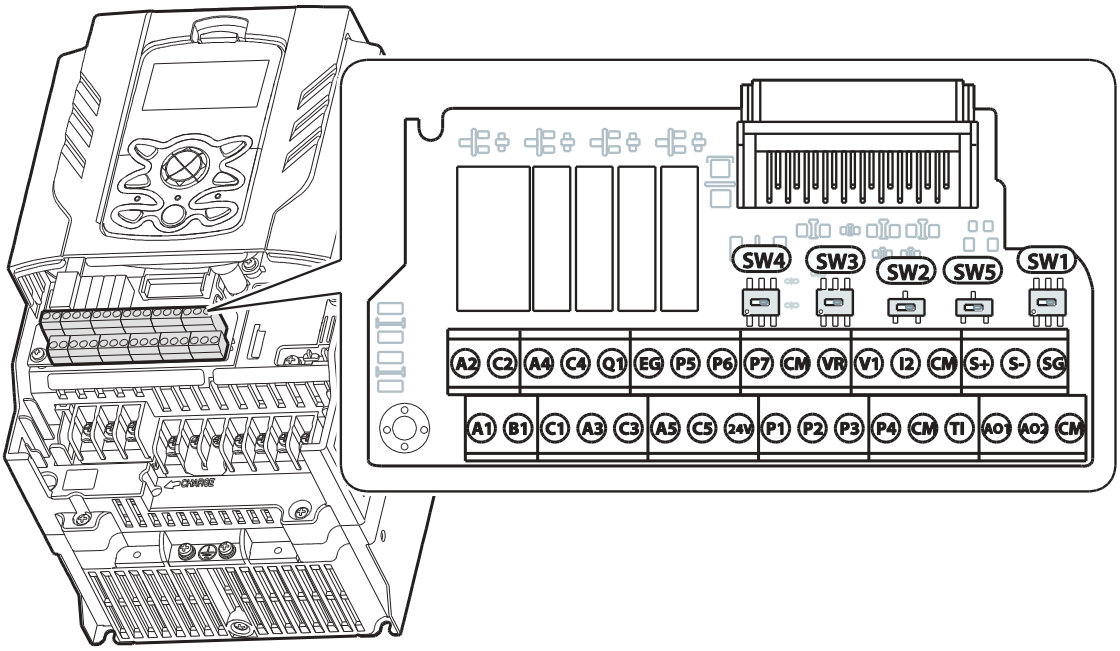

Switch Symbols and Description

Switch	Description	Factory Default
SW1	Terminating Resistor selection switch (Left: On, Right: Off)	Right: OFF
SW2	NPN/PNP mode selection switch (Left: PNP, Right: NPN)	Right: NPN
SW3	V1/T1 (PTC) mode selection switch (Left: V1, Right: T1)	Left: V1
SW4	analog voltage/current input terminal selection switch (Left: I2, Right: V2)	Left: I2
SW5	analog voltage/current output terminal selection switch (Left: VO, Right: IO)	Left: VO

Input and Output Control Terminal Block Wiring Diagram

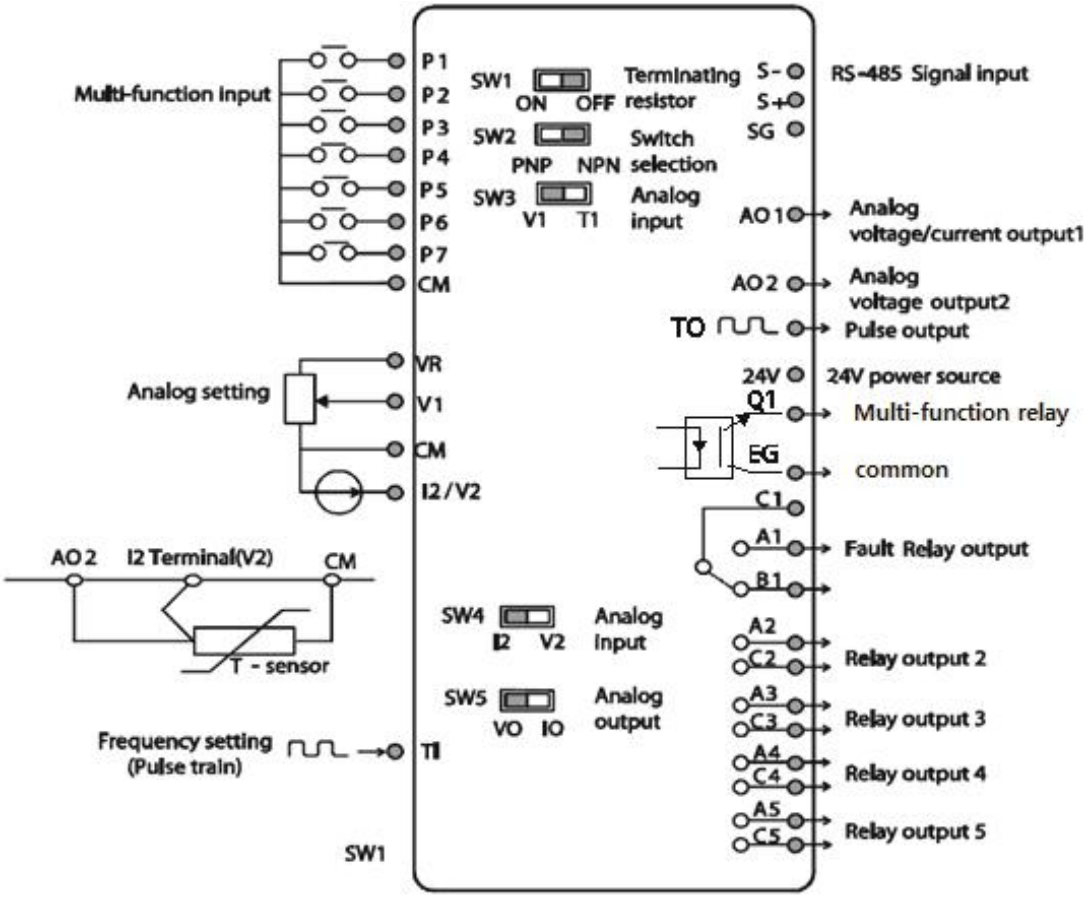

5.5~90kW

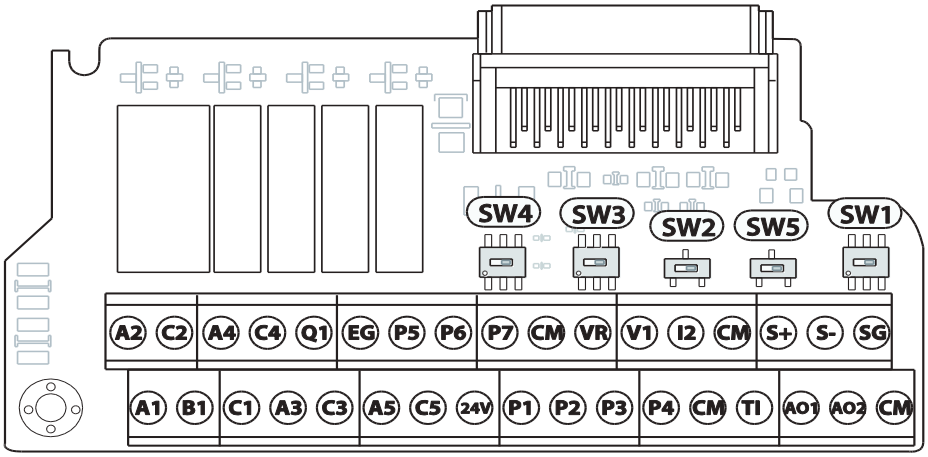

110~500kW

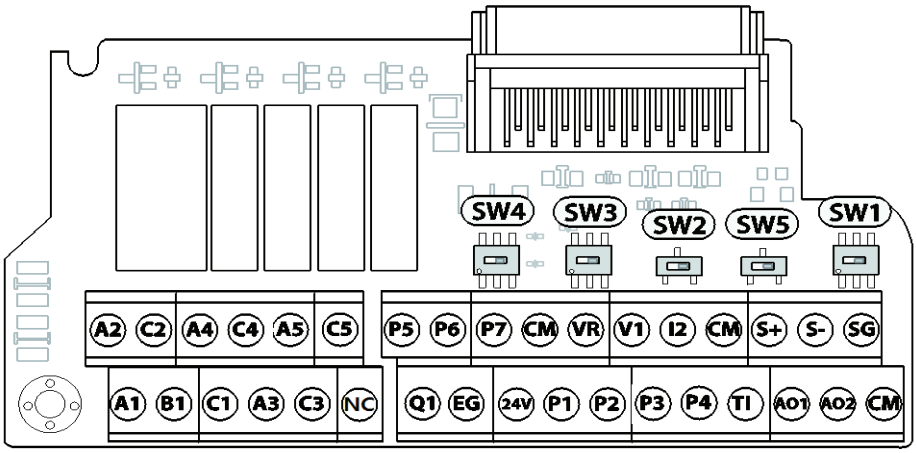

Input Terminal Labels and Descriptions

Function	Label	Name	Description
Multi-function terminal configuration	P1–P5	Multi-function Input 1-7	Configurable for multi-function input terminals. Factory default terminals and setup are as follows : P1: Fx P2: Rx P3: BX P4: RST P5: Speed-L P6: Speed-M P7: Speed-H
	CM	Common Sequence	Common terminal for analog terminal inputs and outputs.
Analog input configuration	VR	Potentiometer power supply	Used to setup or modify a frequency reference via analog voltage or current input. Maximum Voltage Output: 12 V Maximum Current Output: 12 mA Potentiometer : 1–10k Ω
	V1	Voltage input for frequency reference	Used to setup or modify a frequency reference via analog voltage input terminal. Unipolar: 0–10 V(12 V Max) Bipolar: -10–10 V(±12 V Max)

Function	Label	Name	Description
	V2/I2	Voltage/current input for frequency reference input	Used to setup or modify a frequency reference via analog voltage or current input terminals. Switch between voltage (V2) and current (I2) modes using a control board switch (SW4). Input current: 0–20 mA Maximum Input current: 24 mA Input resistance 249 Ω
	TI	Pulse input for frequency reference input (pulse train)	Setup or modify frequency references using pulse inputs from 0 to 32 kHz. Low Level: 0–0.8 V, High Level: 3.5–12 V

Output/Communication Terminal Labels and Descriptions

Function	Label	Name	Description
Analog output	AO	Voltage/Current Output	Used to send inverter output information to external devices: output frequency, output current, output voltage, or a DC voltage. Operate switch (SW5) to select the signal output type (voltage or current) at the AO terminal. Output Signal Specifications: Output voltage: 0–10 V Maximum output voltage/current: 12 V/10 mA Output current: 0–20 mA Maximum output current: 24 mA Factory default output: Frequency
Terminal Contacts	Q1	Multi-function (Open Collector) Pulse Output	Selects a multi-function output signal or pulse output, output frequency, output current, output voltage, DC voltage by selecting one of the outputs. DC 26 V, 50 mA or less Pulse output terminal Output frequency: 0–32 kHz Output voltage: 0–12 V
	EG	Common	Common ground contact for an open collector (with external power source)

	24	24 V power supply	-Maximum output current: 100 mA -Do not use this terminal for any purpose other than supplying power to a PNP mode circuit configuration (e.g. supplying power to other external devices).
	A1/C1/B1	Fault relay output A,B contact	Sends out alarm signals when the inverter's safety features are activated. (N.O.: AC250 V ≤2 A , DC 30 V ≤3 A N.C.: AC250 V ≤1 A , DC 30 V ≤ 1 A) Fault condition: A1 and C1 contacts are connected (B1 and C1 open connection) Normal operation: B1 and C1 contacts are connected (A1 and C1 open connection) Factory default: Frequency
	A2/C2 A3/C3 A4/C4 A5/C5	Multi-function relay output A contact	Defined in the inverter signal features such as output via the multi-function output terminal. (AC 250 V≤ 5 A, DC 30 V≤ 5 A).
	S+/S-/SG	RS-485 signal line	Used to send or receive RS-485 signals. Refer to 7*RS-485* Communication Features on page *354* for more details.

Note

- While making wiring connections at the control terminals ensure that the total cable length does not exceed 165 ft (50 m).
- Ensure that the length of any safety related wiring does not exceed 100 ft (30 m).
- Ensure that the cable length between the keypad and the inverter does not exceed 10 ft (3.04 m). Cable connections longer than 10 ft (3.04 m) may cause signal errors.
- Use ferrite material to protect signal cables from electro-magnetic interference.
- Take care when supporting cables using cable ties, to apply the cable ties no closer than 6 inches from the inverter. This provides sufficient access to fully close the terminal cover.

www.nicsanat.com
021-87700210
NIC SANAT
نیک صنعت

Step 5 PNP/NPN Mode Selection

The H100 inverter supports both PNP (Source) and NPN (Sink) modes for sequence inputs at the terminal. Select an appropriate mode to suit requirements using the PNP/NPN selection switch (SW2) on the control board. Refer to the following information for detailed applications.

PNP Mode (Source)

Select PNP using the PNP/NPN selection switch (SW2). Note that the factory default setting is NPN mode. CM is the common ground terminal for all analog inputs at the terminal, and P24 is 24 V internal source. If you are using an external 24 V source, build a circuit that connects the external source (-) and the CM terminal.

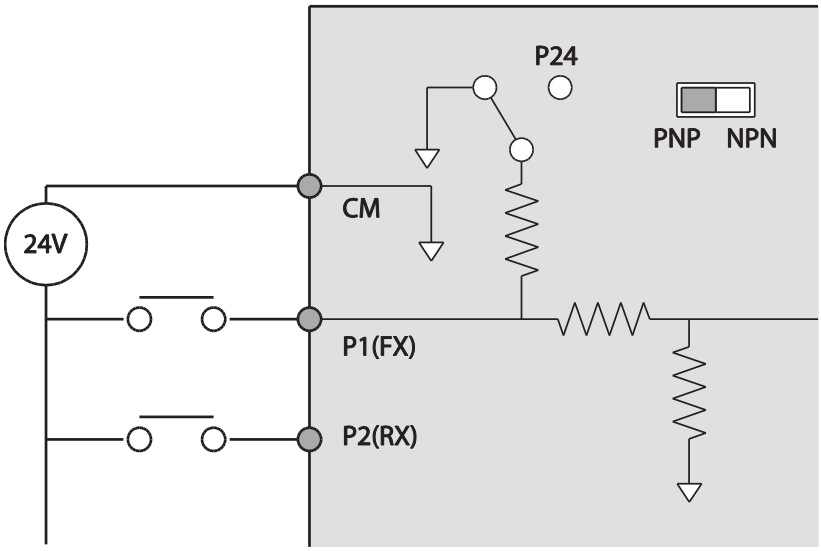

www.nicsanat.com
021-87700210
NIC SANAT
نیک صنعت

NPN Mode (Sink)

Select NPN using the PNP/NPN selection switch (SW2). Note that the factory default setting is NPN mode. CM is the common ground terminal for all analog inputs at the terminal, and P24 is 24 V internal source.

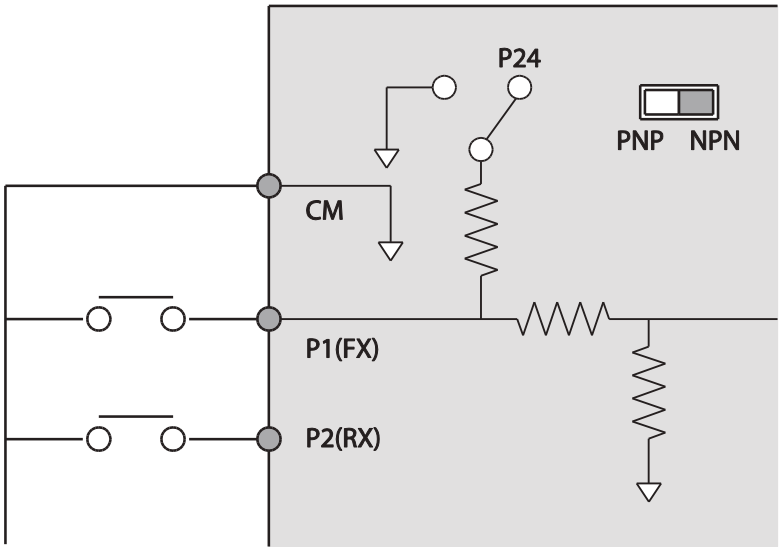

www.nicsanat.com
021-87700210
NIC SANAT
نیک صنعت

Step 6 Disabling the EMC Filter for Power Sources with Asymmetrical Grounding

H100, 400 V 0.75–55 kW, 110~500kW(3 phase) inverters have EMC filters built-in and activated as a factory default design. An EMC filter prevents electromagnetic interference by reducing radio emissions from the inverter. EMC filter use is not always recommended, as it increases leakage current. If an inverter uses a power source with an asymmetrical grounding connection, the EMC filter must be turned off.

Asymmetrical Grounding Connection			
One phase of a delta connection is grounded (TN Systems)	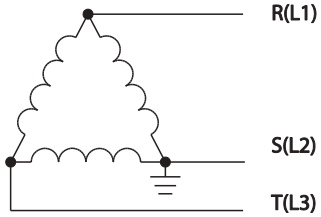	Intermediate grounding point on one phase of a delta connection (TN Systems)	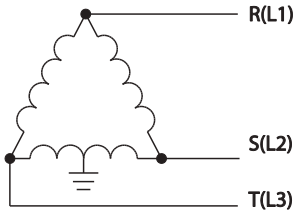
The end of a single phase is grounded (TN Systems)	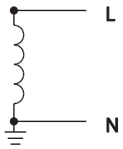	A 3-phase connection without grounding (TN Systems)	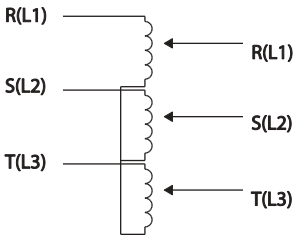

⚠ Danger

- Do not activate the EMC filter if the inverter uses a power source with an asymmetrical grounding structure (corner-earthed systems), for example a grounded delta connection. Personal injury or death by electric shock may result.
- Wait at least 10 minutes before opening the covers and exposing the terminal connections. Before starting work on the inverter, test the connections to ensure all DC voltage has been fully discharged. Personal injury or death by electric shock may result.

Before using the inverter, confirm the power supply's grounding system. Disable the EMC filter if the power source has an asymmetrical grounding connection.

Disabling the Built-in EMC Filter for 0.75–30 kW (3–Phase) Inverters

Refer to the figures below to locate the EMC filter on/off terminal and replace the metal bolt with the plastic bolt. If the EMC filter is required in the future, reverse the steps and replace the plastic bolt with the metal bolt to reconnect the EMC filter.

If the EMC filter is required in the future, reverse the steps and replace the plastic bolt with the metal bolt to enable the EMC filter.

Steel bolt	Plastic bolt
EMC ON	EMC OFF

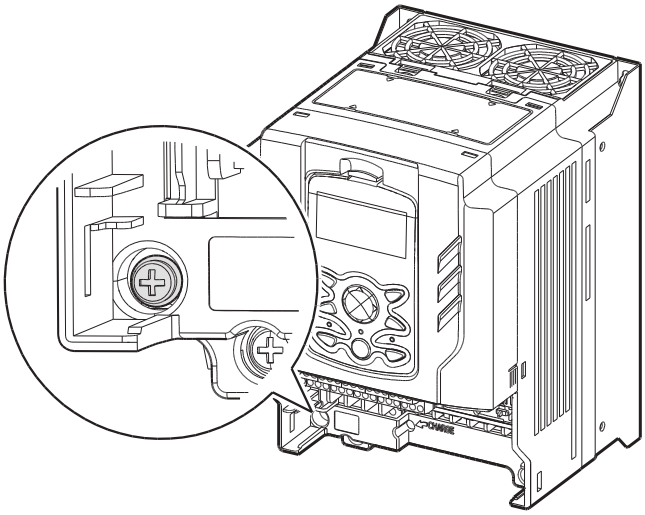

www.nicsanat.com
021-87700210
NIC SANAT
نیک صنعت

Disabling the Built-in EMC Filter for 37–55 kW (3–Phase) Inverters

Follow the instructions listed below to disable the EMC filters for the H100 inverters rated for 37–55 kW.

1 Remove the EMC ground cover located at the bottom of the inverter.

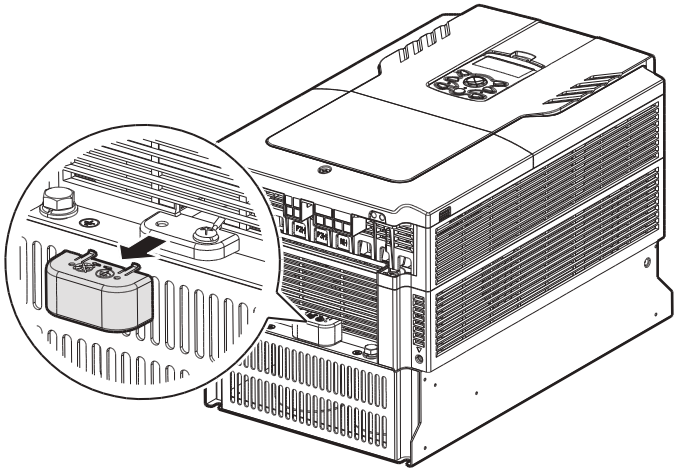

2 Remove the EMC ground cable from the right terminal (EMC filter-ON / factory default), and connect it to the left terminal (EMC filter-OFF / for power sources with asymmetrical grounding).

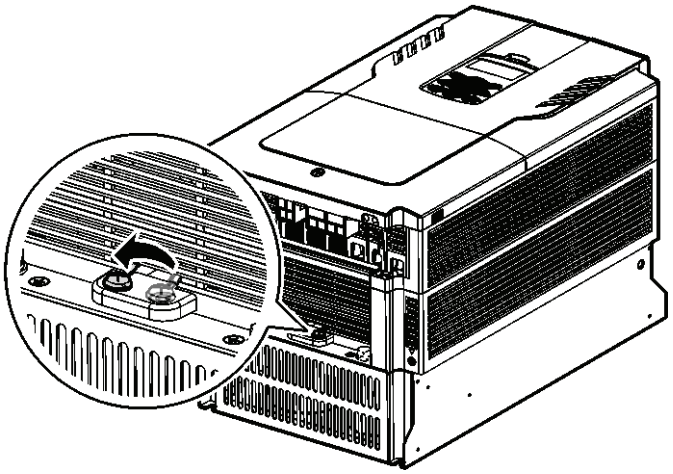

If the EMC filter is required in the future, reverse the steps and connect the EMC ground cable to the right terminal to enable the EMC filter.

Note

The terminal on the right is used to ENABLE the EMC filter (factory default). The terminal on the left is used to DISABLE the EMC filter (for power sources with asymmetrical grounding).

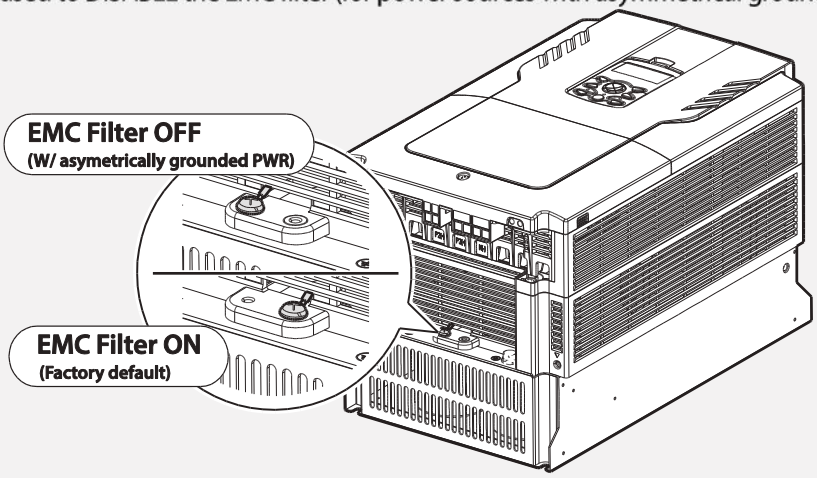

Disabling the Built-in EMC Filter for 110–500 kW (3–Phase) Inverters

Follow the instructions listed below to disable the EMC filters for the H100 inverters rated for 110–500 kW.

1. Remove the front cover located at the top of the inverter.
2. Remove the EMC ground cable from the right terminal (EMC filter-ON / factory default), and connect it to the left terminal (EMC filter-OFF / for power sources with asymmetrical grounding).

110–132 kW (3-Phase)

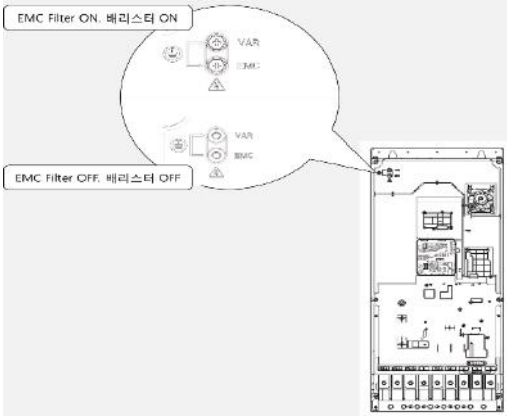

160–185 kW (3-Phase)

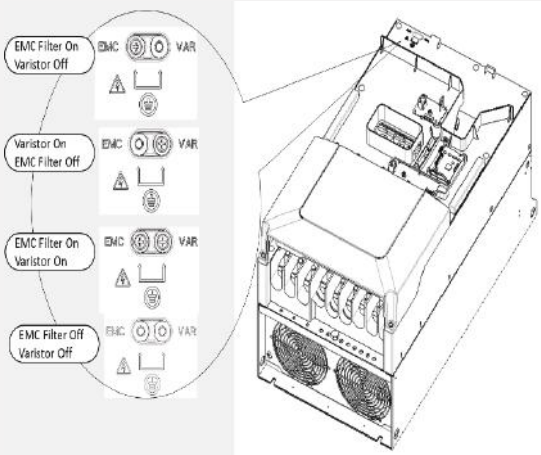

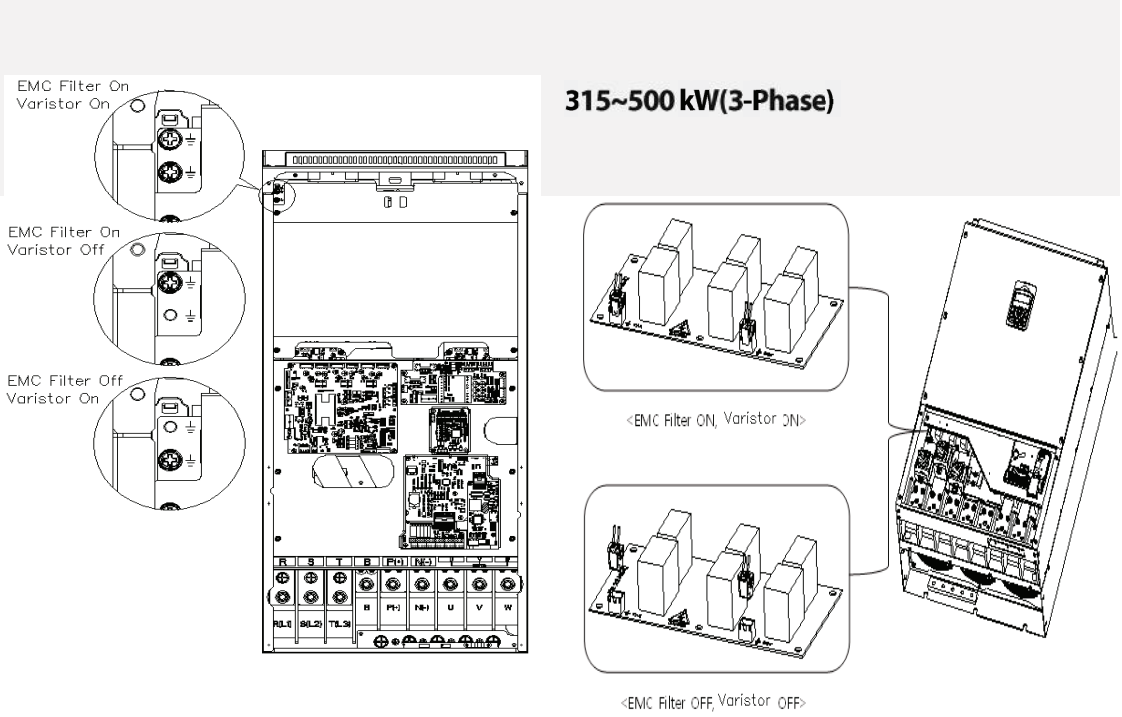

Step 7 Re-assembling the Covers and Routing Bracket

Re-assemble the cable routing bracket and the covers after completing the wiring and basic configurations. Note that the assembly procedure may vary according to the product group or frame size of the product.

www.nicsanat.com
021-87700210
NIC SANAT
نیک صنعت

2.4 Post-Installation Checklist

After completing the installation, check the items in the following table to make sure that the inverter has been safely and correctly installed.

Items	Check Point	Ref.	Result
Installation Location/Power I/O Verification	Is the installation location appropriate?	p.10	
	Does the environment meet the inverter's operating conditions?	p.11	
	Does the power source match the inverter's rated input?	p.585	
	Is the inverter's rated output sufficient to supply the equipment? (Degraded performance will result in certain circumstances. Refer to *11.8 Inverter Continuous Rated Current Derating* on page 618 for details.	p.585	
Power Terminal Wiring	Is a circuit breaker installed on the input side of the inverter?	p.18	
	Is the circuit breaker correctly rated?	p.600	
	Are the power source cables correctly connected to the R/S/T terminals of the inverter? (Caution: connecting the power source to the U/V/W terminals may damage the inverter.)	p.29	
	Are the motor output cables connected in the correct phase rotation (U/V/W)? (Caution: motors will rotate in reverse direction if three phase cables are not wired in the correct rotation.)	p.29	
	Are the cables used in the power terminal connections correctly rated?	p.14	
	Is the inverter grounded correctly?	p.27	
	Are the power terminal screws and the ground terminal screws tightened to their specified torques?	p.29	
	Are the overload protection circuits installed correctly on the motors (if multiple motors are run using one inverter)?	-	
	Is the inverter separated from the power source by a magnetic contactor (if a braking resistor is in use)?	p.18	

Items	Check Point	Ref.	Result
	Are advanced-phase capacitors, surge protection and electromagnetic interference filters installed correctly? (These devices MUST not be installed on the output side of the inverter.)	p.29	
Control Terminal Wiring	Are STP (shielded twisted pair) cables used for control terminal wiring?	-	
	Is the shielding of the STP wiring properly grounded?	-	
	If 3-wire operation is required, are the multi-function input terminals defined prior to the installation of the control wiring connections?	p.36	
	Are the control cables properly wired?	p.36	
	Are the control terminal screws tightened to their specified torques?	p.21	
	Is the total cable length of all control wiring < 165 ft (100 m)?	p.40	
	Is the total length of safety wiring < 100 ft (30 m)?	p.40	
Miscellaneous	Are optional cards connected correctly?	-	
	Is there any debris left inside the inverter?	p.21	
	Are any cables contacting adjacent terminals, creating a potential short circuit risk?	-	
	Are the control terminal connections separated from the power terminal connections?	-	
	Have the capacitors been replaced if they have been in use for > 2 years?	-	
	Has a fuse been installed for the power source?	p.603	
	Are the connections to the motor separated from other connections?	-	

Note

STP (Shielded Twisted Pair) cable has a highly conductive, shielded screen around twisted cable pairs. STP cables protect conductors from electromagnetic interference.

2.5 Test Run

After the post-installation checklist has been completed, follow the instructions below to test the inverter.

1 Turn on the power supply to the inverter. Ensure that the keypad display light is on.

2 Select the command source.

3 Set a frequency reference, and then check the following:

- If V1 is selected as the frequency reference source, does the reference change according to the input voltage at VR?
- If V2 is selected as the frequency reference source, is the voltage/current selector switch (SW4) set to 'voltage', and does the reference change according to the input voltage?
- If I2 is selected as the frequency reference source, is the voltage/current selector switch (SW4) set to 'current', and does the reference change according to the input current?

4 Set the acceleration and deceleration time.

5 Start the motor and check the following:

- Ensure that the motor rotates in the correct direction (refer to the note below).
- Ensure that the motor accelerates and decelerates according to the set times, and that the motor speed reaches the frequency reference.

Note

If the forward command (Fx) is on, the motor should rotate counterclockwise when viewed from the load side of the motor. If the motor rotates in the reverse direction, switch the cables at the U and V terminals.

www.nicsanat.com
021-87700210
NIC SANAT
نیک صنعت

Remarque

Si la commande avant (Fx) est activée, le moteur doit tourner dans le sens anti-horaire si on le regarde côté charge du moteur. Si le moteur tourne dans le sens inverse, inverser les câbles aux bornes U et V.

Verifying the Motor Rotation

1. On the keypad, set DRV-07 to '1 (Keypad)'.
2. Set a frequency reference.
3. If the inverter is in OFF mode, press the [AUTO] key twice on the keypad to operate the inverter in the forward (Fx) direction.
4. If the inver ter is operating in AUTO mode, press the [AUTO] key once on the keypad to operate the inverter in the forward (Fx) direction.
5. Observe the motor's rotation from the load side and ensure that the motor rotates counterclockwise (forward).

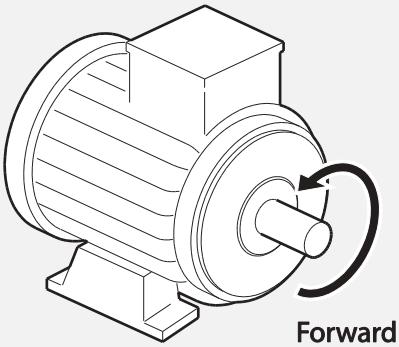

Forward operation

Caution

- Check the parameter settings before running the inverter. Parameter settings may have to be adjusted depending on the load.
- To avoid damaging the inverter, do not supply the inverter with an input voltage that exceeds the rated voltage for the equipment.
- Before running the motor at maximum speed, confirm the motor's rated capacity. As inverters can be used to easily increase motor speed, use caution to ensure that motor speeds do not accidently exceed the motor's rated capacity.

3 Perform Basic Operations

This chapter describes the keypad layout and functions. It also introduces parameter groups and codes required to perform basic operations. The chapter also outlines the correct operation of the inverter before advancing to more complex applications. Examples are provided to demonstrate how the inverter actually operates.

3.1 About the Keypad

The keypad is composed of two main components – the display and the operation (input) keys. Refer to the following illustration to identify part names and functions.

3.1.1 Operation Keys

The following table lists the names and functions of the keypad's operation keys.

www.nicsanat.com
021-87700210
NIC SANAT
نیک صنعت

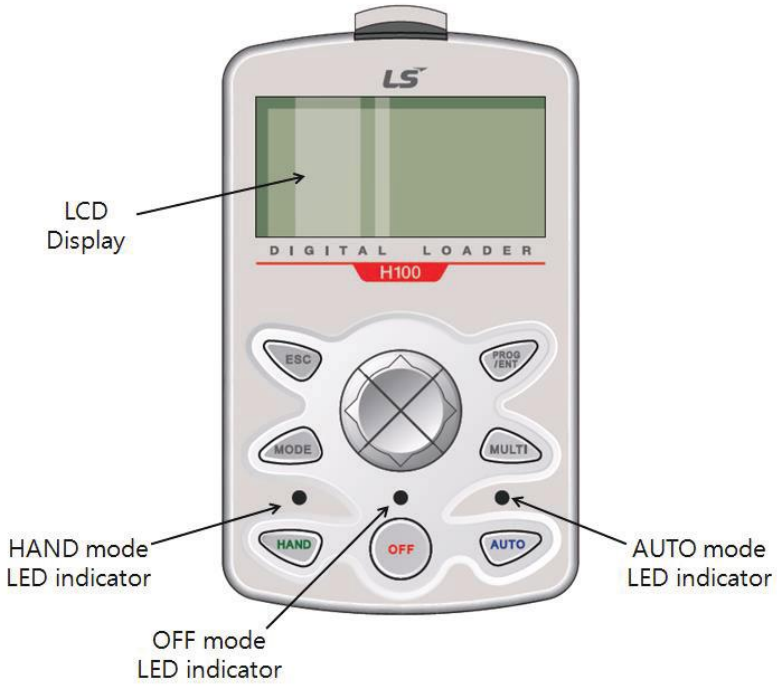

www.nicsanat.com
021-87700210
NIC SANAT
نیک صنعت

MODE	[MODE] Key	Used to switch between modes.
PROG /ENT	[PROG / Ent] Key	Used to select, confirm, or save a parameter value.
	[Up] key [Down] key	Switch between codes or increase or decrease parameter values.
	[Left] key [Right] key	Switch between groups or move the cursor during parameter setup or modification.
MULTI	[MULTI] Key	Used to perform special functions, such as user code registration.
ESC	[ESC] Key	Used to cancel an input during parameter setup. Pressing the [ESC] key before pressing the [PROG / ENT] key reverts the parameter value to the previously set value. Pressing the [ESC] key while editing the codes in any function group makes the keypad display the first code of the function group. Pressing the [ESC] key while moving through the modes makes the keypad display Monitor mode.
HAND	[HAND] Key	Used to switch to HAND (local/manual) operation mode.
OFF	[OFF] Key	Used to switch to OFF (standby) mode or to reset the inverter faults.
AUTO	[AUTO] Key	Used to switch to AUTO (remote) operation mode.

www.nicsanat.com
021-87700210
NIC SANAT
نیک صنعت

3.1.2 About the Display

Monitor mode display

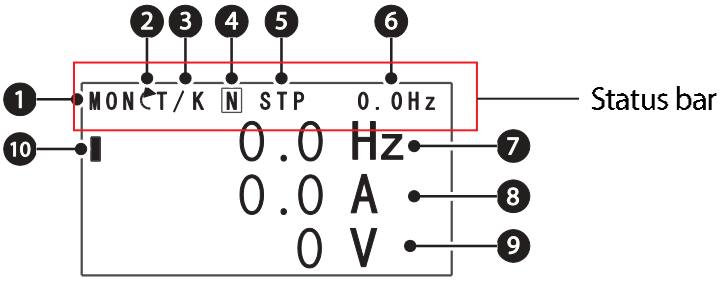

The following table lists display icons and their names/functions.

No.	Name	Description
1	Operation mode	Displays one of the following inverter modes: Mon: Monitor mode PAR: Parameter mode U&M: User defined and Macro mode TRP: Trip mode CNF: Config mode
2	Rotational direction	Displays the motor's rotational direction: - Fx or Rx.
3	Command Source / Frequency reference	Displays a combination of a command source and a frequency reference. Command source K: Keypad O: Optional Fieldbus module A: Application option E: Time event R: Built-in RS-485 communication T: Terminal block Frequency reference source K: Keypad V: V1 terminal I: I2 terminal P: Pulse terminal U: Up operation frequency (Up-down operation) D: Down operation frequency (Up-down operation) S: Stop operation frequency (Up-down operation) O: Optional Fieldbus module

		J: Jog frequency R: Built-in RS-485 frequency 1–7: Multi-step frequency
4	Multi-function key (UserGrp SelKey) configuration	The multi function key (the [MULTI] key) on the keypad is used to register or delete User group parameters in Parameter mode.
5	Operating status	Displays one of the following operation states: STP: Stop FWD: Forward operation REV: Reverse operation ↻: Forward command given ↺: Reverse command given DC: DC output WAN: Warning STL: Stall SPS: Speed search OSS: S/W over current protection is on OSH: H/W overcurrent protection TUN: Auto tuning PHT: Pre-heat FIR: Fire mode operation SLP: Sleep mode operation LTS: Load tuning CAP: Capacity diagnostics PCL: Pump clean
6	Status display item	Status bar display item
7	Monitor mode item 1	Monitor mode display item 1
8	Monitor mode item 2	Monitor mode display item 2
9	Monitor mode item 3	Monitor mode display item 3
10	Monitor mode cursor	Used to highlight currently selected items.

www.nicsanat.com
021-87700210
NIC SANAT
نیک صنعت

Parameter edit mode display

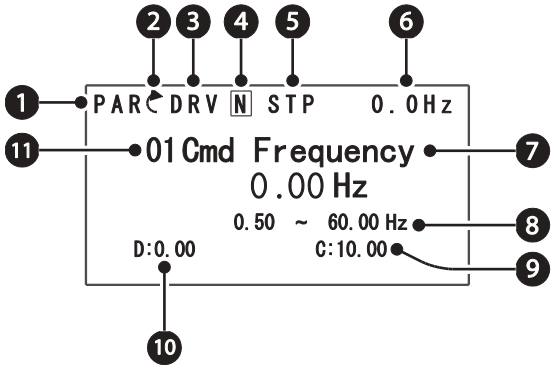

The following table lists display icons and their names/functions.

No.	Name	Description
1	Operation mode	Displays one of the following inverter modes: Mon: Monitor mode PAR: Parameter mode U&M: User defined and Macro mode TRP: Trip mode CNF: Config mode
2	Rotational direction	Displays the motor's rotational direction: - Fx or Rx.
3	Parameter group	Displays one of the following parameter group names: DRV: Drive group BAS: Basic group ADV: Advanced group CON: Control group IN: Input terminal group OUT: Output terminal group COM: Communication group PID: PID group EPI: External PID group AP1: Application 1 group AP2: Application 2 group AP3: Application 3 group PRT: Protection function group M2: 2nd motor group

4	Multi-function key (UserGrp SelKey)configuration	Used to register or delete User group parameters in Parameter mode.
5	Operating status	Displays one of the following operation states: STP: Stop FWD: Forward operation REV: Reverse operation ↻: Forward command given ↺: Reverse command given DC: DC output WAN: Warning STL: Stall SPS: Speed search OSS: S/W over current protection is on OSH: H/W overcurrent protection TUN: Auto tuning PHT: Pre-heat FIR: Fire mode operation SLP: Sleep mode operation LTS: Load tuning CAP: Capacity diagnostics PCL: Pump clean
6	Display item	Displays the value of a monitor display item selected at CNF-20 (Anytime Para).
7	Parameter value	Displays the parameter value of currently selected code.
8	Setting range	Displays the value range for the selected parameter.
9	Set value	Displays the currently set value for the code.
10	Default	Displays the factory default value for the code.
11	Code no. and name	Displays the number and name of the currently selected code.

www.nicsanat.com
021-87700210
NIC SANAT
نیک صنعت

3.1.3 Display Modes

The H100 inverter uses 5 modes to monitor or configure different functions. The parameters in Parameter mode and User & Macro mode are divided into smaller groups of relevant functions.

Press the [MODE] key to navigate between groups

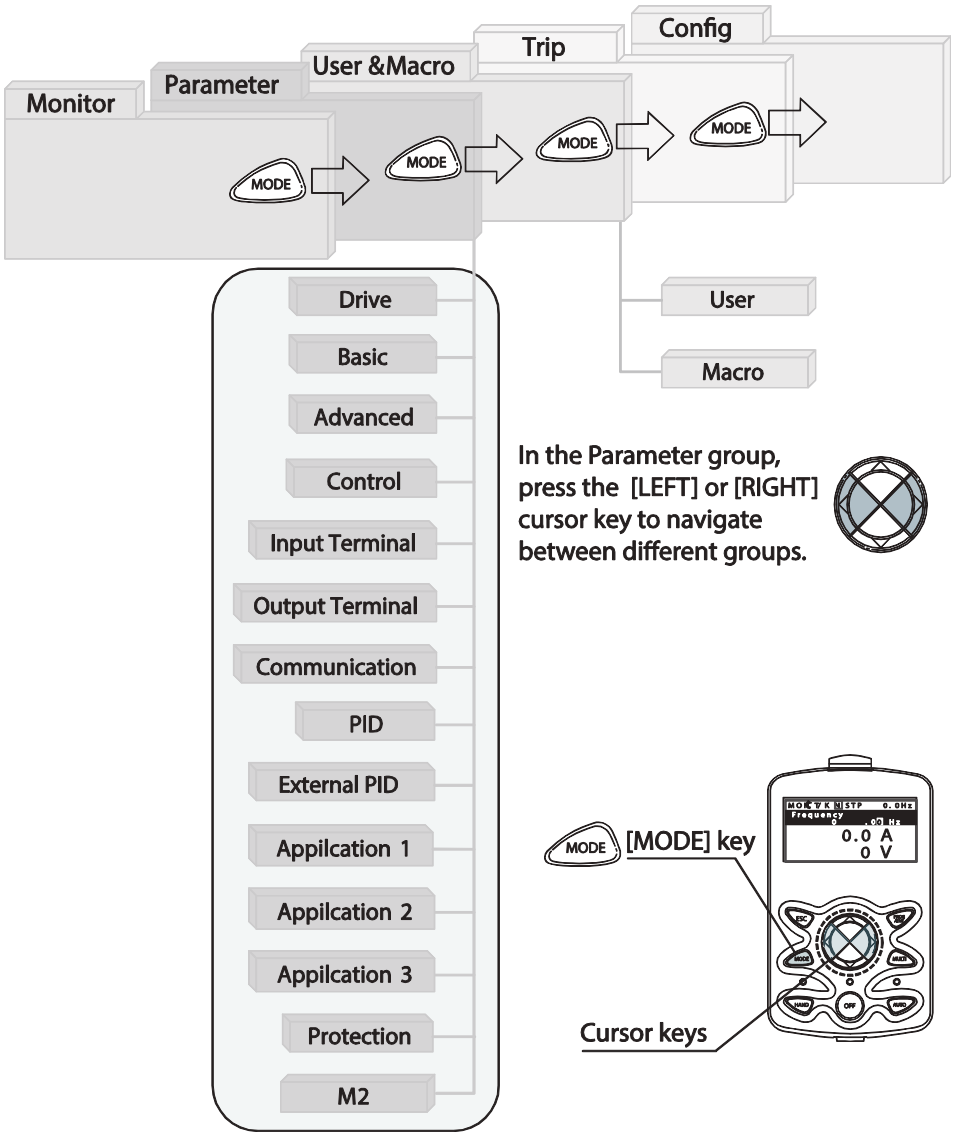

Table of Display Modes

The following table lists the 5 display modes used to control the inverter functions.

Monitor mode	MON	Displays the inverter's operation status information. In this mode, information including the inverter's frequency reference, operation frequency, output current, and voltage may be monitored.
Parameter mode	PAR	Used to configure the functions required to operate the inverter. These functions are divided into 14 groups based on purpose and complexity.
User & Macro mode	U&M	Used to define User groups and Macro groups. These user-definable groups allow specific functions of the inverter to be grouped and managed in separate groups. This mode is not displayed when you navigate through the modes if no user groups or Macro groups have been defined.
Trip mode	TRP	Used to monitor the inverter's fault trip information, including the previous fault trip history. When a fault trip occurs during inverter operation, the operation frequency, output current, and output voltage of the inverter at the time of the fault may be monitored. This mode is not displayed if the inverter is not at fault and fault trip history does not exist.
Config mode	CNF	Used to configure the inverter features that are not directly related to the operation of the inverter. The settings you can configure in the Config mode include keypad display language options, monitor mode environment settings, communication module display settings, and parameter duplication and initialization.

www.nicsanat.com
021-87700210
NIC SANAT
نیک صنعت

Parameter Setting Mode

The following table lists the functions groups under Parameter mode.

www.nicsanat.com
021-87700210
NIC SANAT
نیک صنعت

Drive	DRV	Configures basic operation parameters. These include jog operation, motor capacity evaluation, and torque boost.
Basic	BAS	Configures basic operation parameters. These parameters include motor parameters and multi-step frequency parameters.
Advanced	ADV	Configures acceleration or deceleration patterns, frequency limits, energy saving features, and, regeneration prevention features.
Control	CON	Configures the features related to speed search and KEB (kinetic energy buffering).
Input Terminal	IN	Configures input terminal–related features, including digital multi–functional inputs and analog inputs.
Output Terminal	OUT	Configures output terminal–related features, including digital multi–functional outputs and analog outputs.
Communication	COM	Configures the USB-related features and communication features for the RS-485, Modbus-RTU, LS Bus, Metasys N2, and BACnet. Optional communication module related features may be configured as well, if one is installed.
PID process	PID	Configures the PID control-related features.
EPID process	EPI	Configures the external PID control-related features.
Application 1	AP1	Configures the Sleep Boost, SoftFill, and Multiple motor control (MMC) features related to the PID control.

Application 2	AP2	Configures the HVAC features by setting the features such as load tuning, pump cleaning, and pay back counter.
Application 3	AP3	Configures the time event-related features.
Protection	PRT	Configures motor and inverter protection features.
Motor 2 (Secondary motor)	M2	Configures the secondary motor-related features.

www.nicsanat.com
021-87700210
NIC SANAT
نیک صنعت

User & Macro Mode

User	USR	Used to put the frequently accessed function parameters together into a group. User parameter groups can be configured using the multi-function key on the keypad.
Macro	MCx	Provides different factory-preset groups of functions based on the type of load. Groups MC1, MC2, or MC3 is displayed when the user selects the type of desired load. Macro groups can be selected in CNF mode.

3.2 Learning to Use the Keypad

The keypad enables movement between groups and codes. It also enables users to select and configure functions. At code level, you can set parameter values to turn specific functions on or off or decide how the functions will be used. For detailed information on the codes in each function group, refer to 8 *Table of Functions* on page *415*. Confirm the correct values (or the correct range of the values), then follow the examples below to configure the inverter with the keypad.

3.2.1 Display Mode Selection

The following figure illustrates how the display modes change when you press the [Mode] button on the keypad. You can continue to press the [Mode] key until you get to the desired mode.

www.nicsanat.com
021-87700210
NIC SANAT
نیک صنعت

User & Macro mode and Trip mode are not displayed when all the inverter settings are set to the factory default (User & Macro mode must be configured before it is displayed on the keypad, and Trip mode is displayed only when the inverter is at fault, or has previous trip fault history).

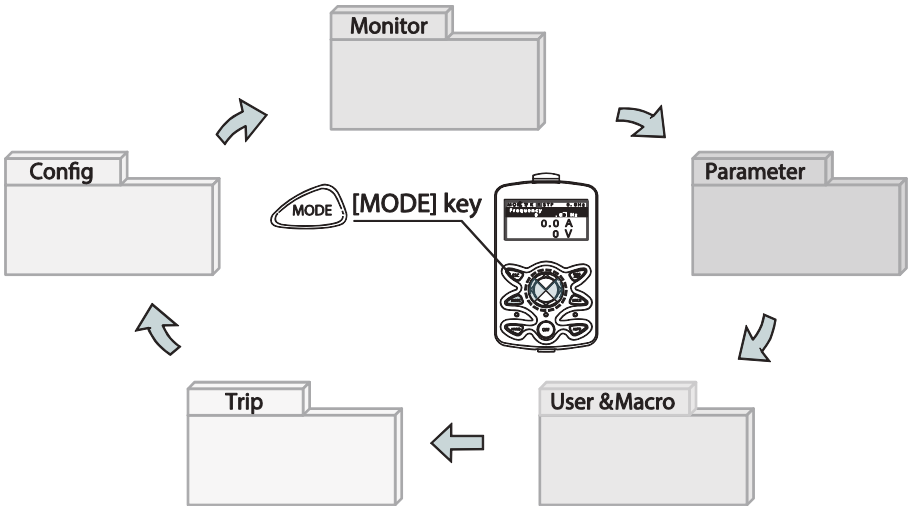

3.2.2 Operation Modes

The inverter is operable only when it is in HAND or AUTO mode. HAND mode is for local control using the keypad, while AUTO mode is for remote control via communication. On the other hand, the inverter stops operating when it is in OFF mode. Select one of the modes (HAND / AUTO / OFF) to operate the inverter or stop the operation.

Follow the examples below to learn how to switch between operation modes.

Operating the Inverter in HAND mode

1. Turn on the inverter. The inverter enters OFF mode and the OFF LED turns on.
2. Move to Parameter mode and set DRV-07 (frequency reference) to '0 (keypad)'.
3. Press the [HAND] key to enter HAND mode (local control mode). HAND mode LED turns on (the OFF LED turns off) and the inverter begins to operate.
4. Press the [OFF] key to stop the inverter operation. The inverter stops operating and the OFF LED turns on.

Operating the inverter in AUTO Mode

1 In OFF mode (when the OFF LED is on), move to Parameter mode and configure the command source at DRV-07 (frequency reference source).

2 Press the [AUTO] key to enter AUTO mode. In AUTO mode, the inverter operates based on the input from the command source set at DRV-07. For example, if DRV-07 (frequency reference source) is set to '0 (Keypad)', the frequency reference is set, and the run command is set to 'ON, the inverter starts operating as soon as the [AUTO] key on the keypad is pressed.

3 Press the [Auto] key again to stop the inverter operation using the keypad. In AUTO mode, the inverter begins or stops operating when the [AUTO] key is pressed.

Note

- You can stop the inverter operation by pressing the [OFF] key when the command source is set to 'Keypad.' In this case, however, the inverter enters OFF mode from AUTO mode.
- If the network communication is set as the command source, the inverter is operable only in AUTO mode. For example, if the run command is set to 'ON' via the network communication and the inverter is in OFF mode, the [AUTO] key must be pressed to start the inverter operation.
- The inverter is operable only in HAND and AUTO modes, but the Fire mode functions operate even when the inverter is in OFF mode.

www.nicsanat.com
021-87700210
NIC SANAT
نیک صنعت

3.2.3 Switching between Groups in Parameter Display Mode

After entering Parameter mode from Monitor mode, press the [Right] key to move to the next code. Press the [Left] key to go back to the previous code.

MON T/K N STP 0.0Hz Frequency 0.00 Hz 0.0 A 0 V	The keypad OFF LED is turned OFF, and the keypad displays Monitor mode. • Press the [Mode] key to change the mode.
PAR DRV N STP 0.0Hz 00 Jump Code 9 CODE 01 Cmd Frequency 0.00 Hz 02 Keypad Run Dir Forward	Parameter mode is displayed. • The Drive group is currently selected. • Press the [Right] key.
PAR BAS N STP 0.0Hz 00 Jump Code 20 CODE 01 Aux Ref Src None 04 Cmd 2nd Src FX/RX-1	• The Basic group is selected. • Press the [Right] key.
PAR ADV N STP 0.0Hz 00 Jump Code 24 CODE 01 Acc Pattern Linear 02 Dec Pattern Linear	• The Advanced group is selected. • Press the [Right] key 9 times.
PAR PRT N STP 0.0Hz 00 Jump Code 40 CODE 05 Phase Loss Chk 06 IPO V Band 15 V	• The Protection group is selected. • Press the [Right] key.

www.nicsanat.com
021-87700210
NIC SANAT
نیک صنعت

PAR DRV N STP 0.0Hz 00 Jump Code 9 CODE 01 Cmd Frequency 0.00 Hz 02 Keypad Run Dir Forward	• The Drive group is selected again.

3.2.4 Switching between Groups in User & Macro Mode

User & Macro mode is accessible only when the user codes are registered or when the macro features are selected. Refer to *8.16 Macro Groups* on page *516* for details about user code registration or macro group selection. After registering the user codes, or selecting a macro group, follow the examples below to access the User & Macro group.

MON T/K N STP 0.0Hz Frequency 0.00 Hz 0.0 A 0 V	• Monitor mode is displayed on the keypad. • Press the [MODE] key twice.
U&M USR N STP 0.0Hz 00 Jump Code 1 CODE 01 Cmd Frequency 0.00 Hz 02 Acc Time 20.0 sec	• User (USR) group in User & Macro mode is displayed. • Press the [Right] key.
U&M MC2 N STP 0.0Hz 00 Jump Code 1 CODE 01 Freq Ref Src Keypad-1 02 Power-on Run ----- No -----	• The Macro (MC2) group in User & Macro mode is displayed. • Press the [Right] key.

www.nicsanat.com
021-87700210
NIC SANAT
نیک صنعت

U&M USR N STP 0.0Hz 00 Jump Code 1 CODE 01 Cmd Frequency 0.00 Hz 02 Acc Time 20.0 sec	• User (USR) group in User & Macro mode is displayed again.

3.2.5 Navigating through the Codes (Functions)

Code Navigation in Monitor mode

The display items in Monitor mode are available only when the inverter is in AUTO mode. In Monitor mode, press the [Up] or [Down] key to move the cursor up or down. Different values, such as the operating frequency, the output current, or voltage are displayed according to the cursor position. The cursor does not move up or down in HAND mode or in OFF mode.

MON T/K N STP 0.0Hz 0.0 Hz 0.0 A 0 V	• In AUTO mode, the cursor appears to the left of the frequency information. • Press the [Down] key.
MON T/K N STP 0.0Hz 0.0 Hz Output Current 0.0 A 0 V	• Information about the second item in Monitor mode (Output Current) is displayed. • Wait for 2 seconds until the information on the display disappears.
MON T/K N STP 0.0Hz 0.0 Hz 0.0 A 0 V	• Information about the second item in Monitor mode (Output Current) disappears and the cursor reappears to the left of the second item. • Press the [Down] key.

MON T/K N STP 0.0Hz 0.0 Hz 0.0 A Output Voltage 0 V	• Information about the third item in Monitor mode (Output Voltage) is displayed. • Wait for 2 seconds until the information on the display disappears.
MON T/K N STP 0.0Hz 0.0 Hz 0.0 A 0 V	• Information about the third item in Monitor mode (Output Voltage) disappears and the cursor appears to the left of the third item. • Press the [Up] key twice.
MON T/K N STP 0.0Hz Frequency 0.00 Hz 0.0 A 0 V	• Information about the first item in Monitor mode (Frequency) is displayed. • Wait for 2 seconds until the information on the display disappears.
MON T/K N STP 0.0Hz 0.0 Hz 0.0 A 0 V	• Information about the first item in Monitor mode (Frequency) disappears and the cursor appears to the left of the first item. • Press the [Up] or [Down] key to move to a desired item and view the information.

www.nicsanat.com
021-87700210
NIC SANAT
نیک صنعت

Code Navigation in Parameter mode

The following examples show you how to move through codes in different function groups (Drive group and Basic group) in Parameter mode. In Parameter mode, press the [Up] or [Down] key to move to the desired functions.

MON T/K N STP 0.0Hz Frequency 0.00 Hz 0.0 A 0 V	• Display turns on when the inverter is powered on. Monitoring mode is displayed. • Press the [MODE] key.
PAR DRV N STP 0.0Hz 00 Jump Code 9 CODE 01 Cmd Frequency 0.00 Hz 02 Keypad Run Dir Forward	• Drive group (DRV) in Parameter mode is displayed. The first code in the Drive group (DRV 00 Jump Code) is currently selected. • If any other group is displayed, press the [MODE] key until the Drive group is displayed, or press the [ESC] key.
PAR DRV N STP 0.0Hz 00 Jump Code 9 CODE 01 Cmd Frequency 0.00 Hz 02 Keypad Run Dir Forward	• Press the [Down] key to move to the second code (DRV 01) of the Drive group. • Press the [Right] key to move to the next function group.
PAR BAS N STP 0.0Hz 00 Jump Code 20 CODE 01 Aux Ref Src None 04 Cmd 2nd Src FX/RX-1	• The Basic group (BAS) is displayed. • Press the [Up] or [Down] key to move to the desired codes and configure the inverter functions.

3.2.6 Navigating Directly to Different Codes

Parameter mode, User & Macro mode, and Config mode allow direct jumps to specific codes. The code used for this feature is called the Jump Code. The Jump Code is the first code of each mode. The Jump Code feature is convenient when navigating for a code in a function group that has many codes.

The following example shows how to navigate directly to code DRV-09 from the initial code (DRV-00 Jump Code) in the Drive group.

PAR DRV N STP 0.0Hz 00 Jump Code 9 CODE 01 Cmd Frequency 0.00 Hz 02 Keypad Run Dir Forward	• The Drive group (DRV) is displayed in Parameter mode. Make sure that the fist code in the Drive group (DRV 00 Jump Code) is currently selected. • Press the [PROG/ENT] key.
PAR DRV N STP 0.0Hz 01 Jump Code 9 CODE 1~99 CODE D:9 C:9	• The Code input screen is displayed and the cursor flashes. A flashing cursor indicates that it is waiting for user input. • Press the [Up] key to increase the number to 16, and then press the [PROG/ENT] key to jump to code DRV-16.
PAR DRV N STP 0.0Hz 01 Jump Code 16 CODE 1~99 CODE D:9 C:9	• DRV-16 (Fwd boost) is displayed. • Press the [MODE] key to view the options available and use the [Up] or [Down] key to move to a desired option.
PAR DRV N STP 0.0Hz 16 Fwd Boost 2.0 % 17 Rev Boost 2.0 % 18 Base Freq 60.00 Hz	• Press the [PROG/ENT] key to save the selection. • The setting is saved and the code is displayed again.
PAR DRV N STP 0.0Hz 00 Jump Code 9 CODE 01 Cmd Frequency 0.00 Hz 02 Keypad Run Dir Forward	• Press the ESC key to go back to the initial code of the Drive group (DRV-00).

www.nicsanat.com
021-87700210
NIC SANAT
نیک صنعت

3.2.7 Parameter Settings available in Monitor Mode

The H100 inverter allows basic parameters, such as the frequency reference, to be modified in Monitor mode. When the inverter is in Hand or OFF mode, the frequency reference can be entered directly from the monitor screen. When the inverter is in AUTO mode, press the [PROG/ENT] key to access the input screen for a frequency reference.

Parameter setting in HAND/OFF mode

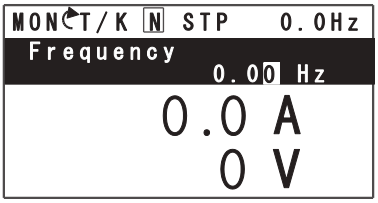	• Ensure that the cursor is at the frequency reference item. If not, move the cursor to the frequency reference item. • When the cursor is at the frequency reference item, detailed information is displayed and the cursor flashes at the input line. A flashing cursor indicates that it is waiting for user input.
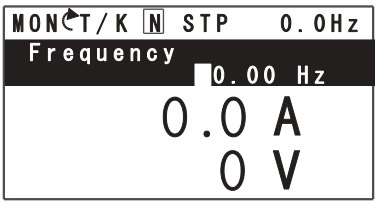	• Press the [Left] or [Right] key to change places.
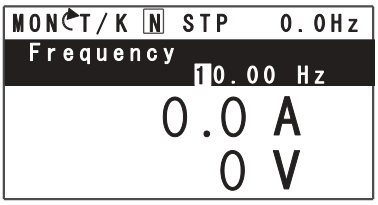	• Press the [Up] or [Down] keys to increase or decrease the numbers, and then press the [Prog/ENT] key to save the change.

www.nicsanat.com
021-87700210
NIC SANAT
نیک صنعت

Parameter setting in AUTO mode

MON T/K N STP 0.0Hz 0.0 Hz 0.0 A 0 V	• Ensure that the cursor is at the frequency reference item. If not, move the cursor to the frequency reference item. • While the cursor is at the frequency reference monitor item, press the [PROG/ENT] key to edit the frequency reference.
MON T/K N STP 0.0Hz Frequency 0.00 Hz 0.0 A 0 V	• Detailed information is displayed and the cursor flashes at the input line. A flashing cursor indicates that it is waiting for user input.
MON T/K N STP 0.0Hz Frequency 0.00 Hz 0.0 A 0 V	• Press the [Left] or [Right] key to move the cursor.
MON T/K N STP 0.0Hz Frequency 10.00 Hz 0.0 A 0 V	• Press the [Up] or [Down] key to increase or decrease the numbers. • When you are done changing the frequency reference, press [PROG/ENT] key to finish setting the parameters.
MON T/K N STP 0.0Hz 10.0 Hz 0.0 A 0 V	• The newly entered frequency reference is displayed.

3.2.8 Setting the Monitor Display Items

In Monitor mode, 3 different items may be monitored at once. Certain monitor items, such as the frequency reference, are selectable. The display items to be displayed on the screen can be selected by the user in the Config (CNF) mode. However, in HAND mode or in OFF mode, the first display item is permanently fixed as the frequency reference. On the top- right

corner of the keypad display's status bar, another frequency item is displayed. This item refers to the frequency reference when the inverter is not operating and the output frequency when the inverter is operating.

The following example shows how to configure the display items in HAND mode.

MON T/K N STP 0.0Hz Frequency 0.00 Hz 0.0 A 0 V	• Monitor mode is displayed on the keypad. The output frequency, output current, and output voltage are displayed (factory default).
CNF N STP 0.0Hz 21 Monitor Line-1 Frequency 22 Monitor Line-2 Output Current 23 Monitor Line-3 Output Voltage	• Go to the Config (CNF) mode. In the Config mode, codes CNF-21–23 are used to select the three monitoring display items. The currently selected display item and its setting are highlighted.
CNF N STP 0.0Hz 21 Monitor Line-1 Frequency 22 Monitor Line-2 Output Current 23 Monitor Line-3 Output Voltage	• To view the available display items and change the setting for the third monitoring display item, press the [Down] key to move to CNF-23 and press the [PROG/ENT] key. • The currently selected display item for CNF-23 (Monitor Line–3) is 'Output Voltage.'
CNF N STP 0.0Hz 23 Monitor Line-3 2 Output Current DC 3 Output Voltage 4 Output Power	• Press the [Up] or [Down] key to view the available display items. • Move to '4 Output Power' and press the [PROG/ENT] key to change the setting.
MON T/K N STP 0.0Hz Frequency 0.00 Hz 0.0 A 0.0 kW	• Press the [MODE] key to go back to Monitor mode. The third display item has been changed to the inverter output power (kW).

www.nicsanat.com
021-87700210
NIC SANAT
نیک صنعت

3.2.9 Selecting the Status Bar Display Items

On the top-right corner of the display, there is a monitoring display item. This monitoring item is displayed as long as the inverter is turned on, regardless of the mode the inverter is operating in. Configure this monitoring item to display the type of information that suits your needs.

This item can be configured only when the inverter is operating in AUTO mode. In HAND or OFF mode, this monitoring item displays frequency reference only.

The following example shows how to configure this monitoring item in AUTO mode.

MON T/K N STP 0.0Hz 0.0 Hz 0.0 A 0 V	• Monitor mode is displayed. • On the top-right edge of the display, the frequency reference is displayed (factory default).
CNF N STP 0.0Hz 20 Anytime Para Frequency 21 Monitor Line-1 Frequency 22 Monitor Line-2 Output Current	• Enter Config mode and go to CNF-20 to select the items to display.
CNF N STP 0.0Hz 20 AnyTime Para 0 Frequency DC 1 Speed 2 Output Current	• Press the [PROG/ENT] key. The currently selected item is highlighted.

CNF N STP 0.0Hz 20 AnyTime Para 0 Frequency DC 1 Speed 2 Output Current	• Press the [Down] key twice to move to '2 (Output Current)', and then press the [PROG/ENT] key to select it.
CNF N STP 0.0A 20 Anytime Para Output Current 21 Monitor Line-1 Frequency 22 Monitor Line-2 Output Current	• The currently selected item is highlighted at CNF- 20 (the display item is changed from 'Frequency' to 'Output Current').
MON T/K N STP 0.0A 0.0 Hz 0.0 A 0 V	• Press the [MODE] key to return to Monitor mode.

www.nicsanat.com
021-87700210
NIC SANAT
نیک صنعت

3.3 Fault Monitoring

3.3.1 Monitoring Faults during Inverter Operation

The following example shows how to monitor faults that occurred during inverter operation.

TRP Current Over Voltage (01) 01 Output Freq 35.10 Hz 02 Output Current 15.5 A	• If a fault trip occurs during inverter operation, the inverter enters Trip mode automatically and displays the type of fault trip that occurred.
TRP Current 01 Output Freq 35.10 Hz 02 Output Current 15.5 A 03 Inverter State Steady	• Press the [Down] key to view the information on the inverter at the time of fault, including the output frequency, output current, and operation type.
TRP Last-1 00 Trip name(1) External Trip 01 Output Freq 45.10 Hz 02 Output Current 12.0 A	• If there were any fault trips that occurred previously, press the [Right] key to display the fault trip information at the times of previous fault trips.
MON T/K N STP 0.0Hz Frequency 0.00 Hz 0.0 A 0 V	• When the inverter is reset and the fault trip is released, the keypad display returns to the screen it was at when the fault trip occurred.

www.nicsanat.com
021-87700210
NIC SANAT
نیک صنعت

3.3.2 Monitoring Multiple Fault Trips

The following example shows how to monitor multiple faults that occur at the same time.

TRP Current Over Voltage (02) 01 Output Freq 35.10 Hz 02 Output Current 15.5 A	• If multiple fault trips occur at the same time, the number of fault trips occurred is displayed on the right side of the fault trip type. • Press the [PROG/ENT] key to view the list of all the fault trips.
TRP Current 00 Trip Name (02) 01 Over Voltage 02 External Trip	• The list of all the fault trips is displayed. • Press the [Down] key to view the types of fault trips that occurred. • Press the [Right] key to display the fault trip information.
MON T/K N STP 0.0Hz Frequency 0.00 Hz 0.0 A 0 V	• When the inverter is reset and the fault trip is released, the keypad display returns to the screen it was at when the fault trip occurred.

www.nicsanat.com
021-87700210
NIC SANAT
نیک صنعت

3.4 Parameter Initialization

The following example demonstrates how to revert all the parameter settings back to the factory default (Parameter Initialization). Parameter initialization may be performed for separate groups in Parameter mode as well.

MON T/K N STP 0.0Hz Frequency 0.00 Hz 0.0 A 0 V	• Monitor mode is displayed.
CNF N STP 0.0Hz 00 Jump Code 20 CODE 01 Language Sel English 02 LCD Contrast	• Press the [MODE] key to move to the Config (CNF) mode.
CNF N STP 0.0Hz 40 Parameter Init ----- No ----- 41 Changed Para View All 42 Multi-Key Sel None	• Press the [Down] key to go to CNF-40 (Parameter Init). • Press the [PROG/ENT] key to configure the parameter initialization options.
CNF N STP 0.0Hz 40 Parameter Init 0 ----- No ----- DC 1 All Grp 2 DRV Grp	• In the list of options, select '1(All Grp),' and then press the [PROG/ENT] key to perform parameter initialization.
CNF N STP 0.0Hz 40 Parameter Init ----- No ----- 41 Changed Para View All 42 Multi-Key Sel None	• The parameter initialization option is displayed again when the initialization is complete.

www.nicsanat.com
021-87700210
NIC SANAT
نیک صنعت

4 Learning Basic Features

This chapter describes the basic features of the H100 inverter. Check the reference page in the table to see the detailed description for each of the advanced features.

Basic Tasks	Description	Ref.
Operation mode selection (HAND / AUTO / OFF)	Used to select the operation mode.	p.83
Frequency reference source configuration for the keypad	Configures the inverter to allow you to setup or modify a frequency reference using the Keypad.	p.88
Frequency reference source configuration for the terminal block (input voltage)	Configures the inverter to allow input voltages at the terminal block (V1, V2) and to setup or modify a frequency reference.	p.89 p.99
Frequency reference source configuration for the terminal block (input current)	Configures the inverter to allow input currents at the terminal block (I2) and to setup or modify a frequency reference.	p.96
Frequency reference source configuration for the terminal block (input pulse)	Configures the inverter to allow input pulse at the terminal block (TI) and to setup or modify a frequency reference.	p.100
Frequency reference source configuration for RS-485 communication	Configures the inverter to allow communication signals from upper level controllers, such as PLCs or PCs, and to setup or modify a frequency reference.	p.102
Frequency control using analog inputs	Enables the user to hold a frequency using analog inputs at terminals.	p.102
Motor operation display options	Configures the display of motor operation values. Motor operation is displayed either in frequency (Hz) or speed (rpm).	p.102
Multi-step speed (frequency) configuration	Configures multi-step frequency operations by receiving an input at the terminals defined for each step frequency.	p.104
Command source configuration for keypad buttons	Command source configuration for keypad buttons.	p.106
Command source configuration for terminal	Configures the inverter to accept inputs at the FX/RX terminals.	p.107

Basic Tasks	Description	Ref.
block inputs		
Command source configuration for RS-485 communication	Configures the inverter to accept communication signals from upper level controllers, such as PLCs or PCs.	p.109
Motor rotation control	Configures the inverter to limit a motor's rotation direction.	p.109
Automatic start-up at power-on	Configures the inverter to start operating at power-on. With this configuration, the inverter begins to run and the motor accelerates as soon as power is supplied to the inverter. To use automatic start-up configuration, the operation command terminals at the terminal block must be turned on.	p.111
Automatic restart after reset of a fault trip condition	Configures the inverter to start operating when the inverter is reset following a fault trip. In this configuration, the inverter starts to run and the motor accelerates as soon as the inverter is reset following a fault trip condition. For automatic start-up configuration to work, the operation command terminals at the terminal block must be turned on.	p.113
Acc/Dec time configuration based on the Max. Frequency	Configures the acceleration and deceleration times for a motor based on a defined maximum frequency.	p.114
Acc/Dec time configuration based on the frequency reference	Configures acceleration and deceleration times for a motor based on a defined frequency reference.	p.117
Multi-stage Acc/Dec time configuration using the multi-function terminal	Configures multi-stage acceleration and deceleration times for a motor based on defined parameters for the multi-function terminals.	p.118
Acc/Dec time transition speed (frequency) configuration	Enables modification of acceleration and deceleration gradients without configuring the multi-functional terminals.	p.120
Acc/Dec pattern configuration	Enables modification of the acceleration and deceleration gradient patterns. Basic patterns to choose from include linear and S-curve patterns.	p.121
Acc/Dec stop command	Stops the current acceleration or deceleration and controls motor operation at a constant speed. Multi-function terminals must be configured for this command.	p.123

Basic Tasks	Description	Ref.
Linear V/F pattern operation	Configures the inverter to run a motor at a constant torque. To maintain the required torque, the operating frequency may vary during operation.	p.125
Square reduction V/F pattern operation	Configures the inverter to run the motor at a square reduction V/F pattern. Fans and pumps are appropriate loads for square reduction V/F operation.	p.126
User V/F pattern configuration	Enables the user to configure a V/F pattern to match the characteristics of a motor. This configuration is for special-purpose motor applications to achieve optimal performance.	p.127
Manual torque boost	Manual configuration of the inverter to produce a momentary torque boost. This configuration is for loads that require a large amount of starting torque, such as elevators or lifts.	p.129
Automatic torque boost	Automatic configuration of the inverter that provides "auto tuning" that produces a momentary torque boost. This configuration is for loads that require a large amount of starting torque, such as elevators or lifts.	p.130
Output voltage adjustment	Adjusts the output voltage to the motor when the power supply to the inverter differs from the motor's rated input voltage.	p.131
Accelerating start	Accelerating start is the general way to start motor operation. The typical application configures the motor to accelerate to a target frequency in response to a run command, however there may be other start or acceleration conditions defined.	p.132
Start after DC braking	Configures the inverter to perform DC braking before the motor starts rotating again. This configuration is used when the motor will be rotating before the voltage is supplied from the inverter.	p.132
Deceleration stop	Deceleration stop is the typical method used to stop a motor. The motor decelerates to 0 Hz and stops on a stop command, however there may be other stop or deceleration conditions defined.	p.133
Stopping by DC braking	Configures the inverter to apply DC braking during motor deceleration. The frequency at which DC braking occurs must be defined and during deceleration, when the motor	p.134

Basic Tasks	Description	Ref.
	reaches the defined frequency, DC braking is applied.	
Free-run stop	Configures the inverter to stop output to the motor using a stop command. The motor will free-run until it slows down and stops.	p.135
Power braking	Configures the inverter to provide optimal, motor deceleration, without tripping over-voltage protection.	p.136
Start/maximum frequency configuration	Configures the frequency reference limits by defining a start frequency and a maximum frequency.	p.137
Upper/lower frequency limit configuration	Configures the frequency reference limits by defining an upper limit and a lower limit.	p.137
Frequency jump	Configures the inverter to avoid running a motor in mechanically resonating frequencies.	p.140
2nd Operation Configuration	Used to configure the 2nd operation mode and switch between operation modes according to your requirements.	p.141
Multi-function input terminal control configuration	Enables the user to improve the responsiveness of the multi-function input terminals.	p.142

4.1 Switching between the Operation Modes (HAND / AUTO / OFF)

The H100 series inverters have two operation modes–the HAND and AUTO modes. HAND mode is used for local control using the keypad. AUTO mode is used for remote control using the terminal inputs or networks commands (the keypad may still be used in AUTO mode if the command source is set as 'keypad').

HAND Mode Operation

Follow the instructions listed below to operate the inverter in HAND mode.

1 On the keypad, use the [Up], [Down], [Left], or [Right] keys to set the frequency reference.

2 Press the [HAND] key. The HAND LED turns on and the inverter starts operating in HAND mode.

3 Press the [OFF] key. The OFF LED turns on and the inverter stops operating.

AUTO Mode Operation

Follow the instructions listed below to operate the inverter in AUTO mode.

1 Press the [AUTO] key to switch to AUTO mode.

2 Operate the inverter using the terminal block input, commands via communication, or keypad input.

3 Press the [OFF] key. The OFF LED turns on and the inverter stops operating.

Mode Keys and LED Status

HAND	Used to enter the HAND operation mode.
OFF	Used to enter the OFF mode (standby mode) or to reset fault trips.
AUTO	Used to enter the AUTO operation mode or to start or stop inverter operation in AUTO mode.
HAND LED	Turns on green (steady) during HAND mode operation.
OFF LED	Turns on red (steady) while the inverter is in OFF mode (standby), and flashes then a fault trip occurs. The LED turns on red (steady) again when the fault trip condition is released.
AUTO LED	Turns on green (steady) when the inverter operates in Auto mode, and flashes green when the inverter is in AUTO mode, but is not operating.

www.nicsanat.com
021-87700210
NIC SANAT
نیک صنعت

Basic HAND/AUTO/OFF Mode Operations

HAND Mode (Locally controlled operation mode)	In HAND mode, operation is available only by the keypad input. In Monitor mode, the currently set frequency reference is displayed at all times. Also, in HAND mode: • The first monitoring item is used to adjust the frequency with the up/down and left/right keys. The set frequency is reflected in DRV-02 (HAND Cmd Freq). • The motor's rotation direction can be set at DRV-02 (Keypad Run Dir). • Terminal block functions do not operate (with the exception of BX, External Trip, and multi-step acc/dec operation related terminal functions). • Fire mode commands take the highest priority (if any are given). • The following advanced features are not available: - PID / EPID control - Flow compensation - Pump clean - Load tuning - Motor preheating - Time scheduling - PowerOn resume - Multiple motor control • Inverter monitoring and protection features are available in HAND mode.
OFF Mode (Standby)	In OFF mode, the inverter operation stops. Pressing the OFF key during HAND/AUTO mode operations will cause the OFF LED to turn on. Then, the inverter stops operating or decelerates and stops, according to the deceleration options set by the user. Also, in AUTO mode: • Terminal block functions do not operate (with the exception of BX, External Trip and multi-step acc/dec operation related terminal functions). • Fire mode commands take the highest priority (if any are given).
AUTO Mode (Remotely controlled operation mode)	In AUTO mode, the inverter operates based on the command from the command source set at DRV-06 (Cmd Source), with the frequency reference from the source set at DRV-07 (Freq Ref Src).

www.nicsanat.com
021-87700210
NIC SANAT
نیک صنعت

Function Codes related to HAND/AUTO/OFF Operation Modes

<table>
<tr><th>Codes / Functions</th><th>Description</th></tr>
<tr><td>DRV-01
Cmd Frequency</td><td>Frequency reference in AUTO mode when DRV-07 is set to'KeyPad'.</td></tr>
<tr><td>DRV-02
KeyPad Run Dir</td><td>Rotation direction of the keypad command in the HAND or AUTO mode.
<table>
<tr><th colspan="2">Settings</th><th>Description</th></tr>
<tr><td>0</td><td>Forward</td><td>Fx operation</td></tr>
<tr><td>1</td><td>Reverse</td><td>Rx operation</td></tr>
</table></td></tr>
<tr><td>DRV-05
KPD H.O.A Lock</td><td>To make HAND-OFF-AUTO enabled/disabled
<table>
<tr><th colspan="2">Settings</th><th>Description</th></tr>
<tr><td>0</td><td>Locked</td><td>To make HAND-OFF-AUTO disabled and turn Auto mode</td></tr>
<tr><td>1</td><td>During Run</td><td>If [DRV-06 Cmd Source] is Fx/Rx-1, Fx/Rx-2, Int485 or fieldbus, HAND-OFF-AUTO is enabled only during working</td></tr>
<tr><td>3</td><td>Unlocked</td><td>To make HAND-OFF-AUTO enabled</td></tr>
</table></td></tr>
<tr><td>DRV-25
HAND Cmd Freq</td><td>Frequency displayed at the monitor display item (Monitor Line-1) when the HAND key is pressed in other modes (default frequency reference for HAND mode).</td></tr>
<tr><td>OUT-31–36
Relay 1–5</td><td>Set AUTO State (36) to ensure that the inverter is in AUTO mode.</td></tr>
<tr><td>OUT-31–36
Relay 1–5</td><td>Set HAND State (37) to ensure that the inverter is in HAND mode.</td></tr>
</table>

Switching between the HAND/AUTO/OFF Modes

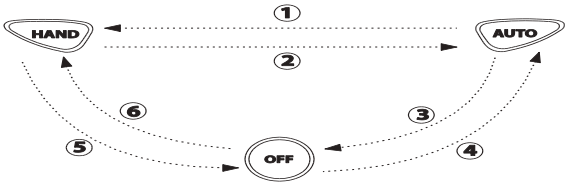

<table>
<tr><th>Mode</th><th>Description</th></tr>
<tr><td>①AUTO→HAND</td><td>Press the HAND key in AUTO mode to switch to HAND mode. The inverter operates as follows based on the setting at DRV-26 (Hand Ref Mode).
<table>
<tr><th colspan="2">Settings</th><th>Description</th></tr>
<tr><td>0</td><td>Hand Parameter</td><td>The inverter operates based on the operation direction set at DRV-02 (Keypad Run Dir) and the frequency reference</td></tr>
</table></td></tr>
</table>

Mode	Description
	set at DRV-25 (HAND Cmd Freq). 1 Follow Auto: The inverter takes over the operation direction and the frequency reference from the settings for AUTO mode and keeps performing the same operation. If the inverter was stopped in AUTO mode, the operation direction is set as Fx and the frequency reference is set as 0 (no inverter output).
②HAND→AUTO	Press the AUTO key in HAND mode to switch to AUTO mode. The inverter operates based on the command source and frequency reference settings set at DRV-06 and DRV-07. If DRV-06 (Cmd Source) is set to 'keypad' press the AUTO key once again to start inverter operation.
③AUTO→OFF	Press the OFF key in AUTO mode to stop the inverter operation (the inverter enters OFF mode).
④OFF→AUTO	Press the AUTO key in OFF mode to switch to AUTO mode. The inverter operates based on the command source and frequency reference settings set at DRV-06 and DRV-07. If DRV-06 (Cmd Source) is set to 'keypad' press the AUTO key once again to start inverter operation.
⑤HAND→OFF	Press the OFF key in HAND mode to stop the inverter operation (the inverter enters OFF mode).
⑥OFF→HAND	Press the HAND key in OFF mode to switch to HAND mode. The inverter operates based on the operation direction set at DRV-02 (Keypad Run Dir) and the frequency reference set at DRV-25 (HAND Cmd Freq).

Operation Mode at Power Recovery

If a power interruption occurs during inverter operation in the OFF or HAND mode, the inverter halts the operation with low voltage fault trip. Then, when the power is recovered, the inverter turns on in OFF mode.

If the inverter was operating in AUTO mode at the time of the low voltage trip following the power interruption, the inverter turns on in AUTO mode, and the operation may vary depending on the inverter's 'PowerOn Resume' and 'Power-on run' settings.

Note

- To operate the inverter using the keypad in AUTO mode, set DRV-06 (CMD Source) to 'KeyPad' and press the AUTO key to enter AUTO mode. Then, press the AUTO key on the keypad once again to start the inverter operation.
- If a fault trip occurs during an operation in the AUTO or HAND mode, the inverter can be reset by pressing the OFF key. After the reset, the fault trip is released and the inverter enters

OFF mode.

- If a fault trip occurs during an operation in the AUTO or HAND mode, the inverter can be reset using the reset signal from the multi-function input terminal as well. In this case, the inverter turns back on in AUTO mode after the fault trip is released.

Caution

Use caution when the inverter is set to operate in AUTO mode by commands over communication, and if COM-96 (PowerOn Resume) is set to 'yes', as the motor will begin rotating when the inverter starts up, without additional run commands.

4.2 Setting Frequency Reference

The H100 inverter provides several methods to setup and modify a frequency reference for an operation. The keypad, analog inputs [for example voltage (V1, V2) and current (I2) signals], or RS-485 (digital signals from higher-level controllers, such as PC or PLC) can be used.

Group	Code	Name	LCD Display	Parameter Setting		Setting Range	Unit
DRV	7	Frequency reference source	Freq Ref Src	0	KeyPad-1	0–11	-
				1	KeyPad-2		
				2	V1		
				4	V2		
				5	I2		
				6	Int 485		
				7	Field Bus		
				9	Pulse		
				10*	V3		
				11	I3		

* '10(V3)~11(I3)' of DRV-07 are available when Extension IO option is equipped. Refer to Extension IO option manual for more detailed information.

www.nicsanat.com
021-87700210
NIC SANAT
نیک صنعت

4.2.1 Keypad as the Source (KeyPad-1 setting)

You can modify frequency reference by using the keypad and apply changes by pressing the [ENT/PROG] key. To use the keypad as a frequency reference input source, go to DRV-07 (Frequency reference source) and change the parameter value to '0 (Keypad-1)'. Input the frequency reference for an operation at DRV-01 (Frequency reference).

Group	Code	Name	LCD Display	Parameter Setting		Setting Range	Unit
DRV	01	Frequency reference	Cmd Frequency	0.00		0.00, Low Freq– High Freq*	Hz
	07	Frequency reference source	Freq Ref Src	0	KeyPad-1	0–11	-

* You cannot set a frequency reference that exceeds the Max. Frequency, as configured with DRV-20.

4.2.2 Keypad as the Source (KeyPad-2 setting)

You can use the [UP] and [DOWN] cursor keys to modify a frequency reference. To use this as a second option, set the keypad as the source of the frequency reference, by going to DRV-07 (Frequency reference source) and change the parameter value to '1 (Keypad-2)'. This allows frequency reference values to be increased or decreased by pressing the [UP] and [DOWN] cursor keys.

Group	Code	Name	LCD Display	Parameter Setting		Setting Range	Unit
DRV	07	Frequency reference source	Freq Ref Src	1	KeyPad-2	0–11	-
	01	Frequency reference		0.00		0.00, Low Freq– High Freq*	Hz

*You cannot set a frequency reference that exceeds the Max. Frequency, as configured with DRV-20.

4.2.3 V1 Terminal as the Source

You can set and modify a frequency reference by setting voltage inputs when using the V1

terminal. Use voltage inputs ranging from 0–10 V (unipolar) for forward only operation. Use voltage inputs ranging from -10 to +10 V (bipolar) for both directions, where negative voltage inputs are used in reverse operations.

4.2.3.1 Setting a Frequency Reference for 0–10 V Input

Set IN-06 (V1 Polarity) to '0 (unipolar)'. Use a voltage output from an external source or use the voltage output from the VR terminal to provide inputs to V1. Refer to the diagrams below for the wiring required for each application.

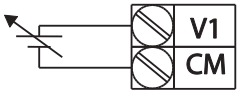

[External source application]

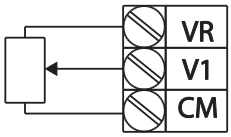

[Internal source (VR) application]

Group	Code	Name	LCD Display	Parameter Setting		Setting Range	Unit
DRV	07	Frequency reference source	Freq Ref Src	2	V1	0–11	-
IN	01	Frequency at maximum analog input	Freq at 100%	Maximum frequency		0.00–Max. Frequency	Hz
	05	V1 input monitor	V1 Monitor[V]	0.00		0.00–12.00	V
	06	V1 polarity options	V1 Polarity	0	Unipolar	0–1	-
	07	V1 input filter time constant	V1 Filter	10		0–10000	msec
	08	V1 minimum input voltage	V1 volt x1	0.00		0.00–10.00	V
	09	V1 output at minimum voltage (%)	V1 Perc y1	0.00		0.00–100.00	%
	10	V1 maximum input voltage	V1 Volt x2	10.00		0 .00– 12.00	V
	11	V1 output at maximum voltage	V1 Perc y2	100.00		0–100	%

Group	Code	Name	LCD Display	Parameter Setting		Setting Range	Unit
		(%)					
	16	Rotation direction options	V1 Inverting	0	No	0–1	-
	17	V1 Quantizing level	V1 Quantizing	0.04		0.00*, 0.04–10.00	%

* Quantizing is disabled if '0' is selected.

Code	Description
IN-01 Freq at 100%	Configures the frequency reference at the maximum input voltage when a potentiometer is connected to the control terminal block. A frequency set with code IN-01 becomes the maximum frequency only if the value set in code IN-11 (or IN-15) is 100 (%). • Set code IN-01 to 40.00 and use default values for codes IN-02–IN-16. Motor will run at 40.00 Hz when a 10 V input is provided at V1. • Set code IN-11 to 50.00 and use default values for codes IN-01–IN-16. Motor will run at 30.00 Hz (50% of the default maximum frequency–60 Hz) when a 10 V input is provided at V1.
IN-05 V1 Monitor[V]	Configures the inverter to monitor the input voltage at V1.
IN-07 V1 Filter	V1 Filter may be used when there are large variations between reference frequencies. Variations can be mitigated by increasing the time constant, but this requires an increased response time. The value t (time) indicates the time required for the frequency to reach 63% of the reference, when external input voltages are provided in multiple steps. 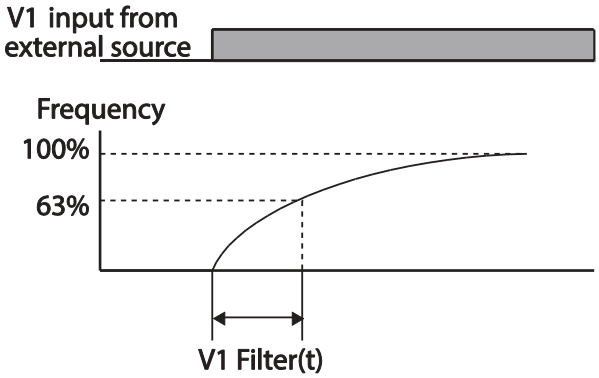 [V1 Filter]

IN-08 V1 volt x1– IN-11 V1 Perc y2	These parameters are used to configure the gradient level and offset values of the Output Frequency, based on the Input Voltage. **Frequency reference** 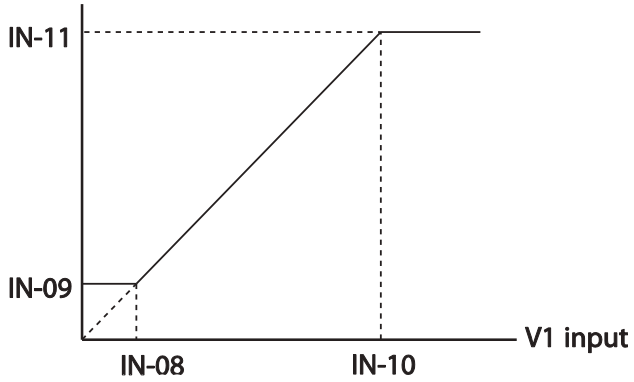
IN-16 V1 Inverting	Inverts the direction of rotation. Set this code to '1 (Yes)' if you need the motor to run in the opposite direction from the current rotation.
IN-17 V1 Quantizing	Quantizing may be used when the noise level is high in the analog input (V1 terminal) signal. Quantizing is useful when you are operating a noise-sensitive system, because it suppresses any signal noise. However, quantizing will diminish system sensitivity (resultant power of the output frequency will decrease based on the analog input). You can also turn on the low-pass filter using code IN-07 to reduce the noise, but increasing the value will reduce responsiveness and may cause pulsations (ripples) in the output frequency. Parameter values for quantizing refer to a percentage based on the maximum input. Therefore, if the value is set to 1% of the analog maximum input (60 Hz), the output frequency will increase or decrease by 0.6 Hz per 0.1 V difference. When the analog input is increased, an increase to the input equal to 75% of the set value will change the output frequency, and then the frequency will increase according to the set value. Likewise, when the analog input decreases, a decrease in the input equal to 75% of the set value will make an initial change to the output frequency. As a result, the output frequency will be different at acceleration and deceleration, mitigating the effect of analog input changes over the output frequency. (ripple)

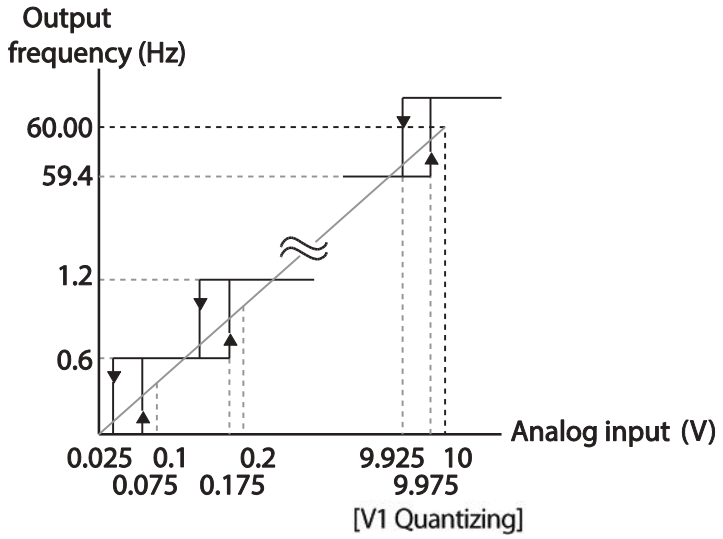

0–10 V Input Voltage Setting Details

www.nicsanat.com
021-87700210
NIC SANAT
نیک صنعت

www.nicsanat.com
021-87700210
NIC SANAT
نیک صنعت

4.2.3.3 Setting a Frequency Reference for -10–+10 V Input

Set DRV-07 (Frequency reference source) to '2 (V1)', and then set IN-06 (V1 Polarity) to '1 (bipolar)'. Use the output voltage from an external source to provide input to V1.

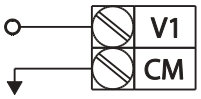

[V1 terminal wiring]

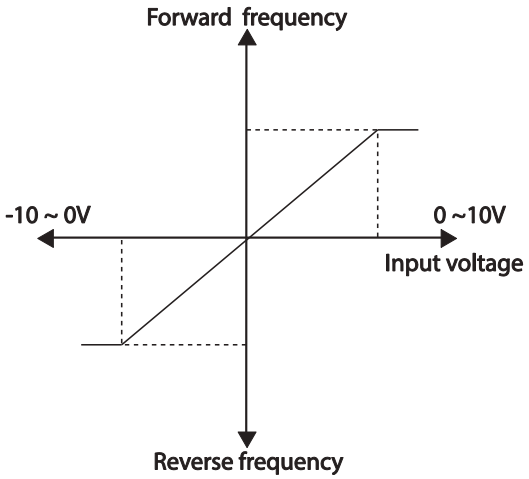

[Bipolar input voltage and output frequency]

Group	Code	Name	LCD Display	Parameter Setting		Setting Range	Unit
DRV	07	Frequency reference source	Freq Ref Src	2	V1	0–11	-
IN	01	Frequency at maximum analog input	Freq at 100%	60.00		0– Max Frequency	Hz
	05	V1 input monitor	V1 Monitor	0.00		-12.00–12.00 V	V
	06	V1 polarity options	V1 Polarity	1	Bipolar	0–1	-
	12	V1 minimum input voltage	V1- volt x1	0.00		-10.00–0.00 V	V
	13	V1 output at minimum voltage (%)	V1- Perc y1	0.00		-100.00–0.00%	%
	14	V1 maximum input voltage	V1- Volt x2	-10.00		-12.00 –0.00 V	V

	15	V1 output at maximum voltage (%)	V1- Perc y2	-100.00	-100.00–0.00%	%

Rotational Directions for Different Voltage Inputs

FWD	Forward	Reverse
REV	Reverse	Forward

-10–10 V Voltage Input Setting Details

IN-12 V1- volt x1– IN-15 V1- Perc y2	Sets the gradient level and off-set value of the output frequency in relation to the input voltage. These codes are displayed only when IN-06 is set to '1 (bipolar)'. As an example, if the minimum input voltage (at V1) is set to -2 (V) with 10% output ratio, and the maximum voltage is set to -8 (V) with 80% output ratio respectively, the output frequency will vary within the range of 6–48 Hz. For details about the 0–+10 V analog inputs, refer to the code descriptions IN-08 V1 volt x1–IN-11 V1 Perc y2 on page 92.

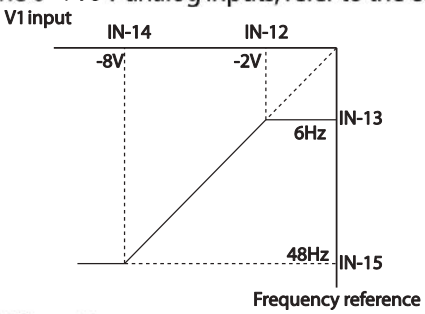

www.nicsanat.com
021-87700210
NIC SANAT
نیک صنعت

4.2.3.4 Setting a Reference Frequency using Input Current (I2)

You can set and modify a frequency reference using input current at the I2 terminal after selecting current input at SW4. Set DRV-07 (Frequency reference source) to '5 (I2)' and apply 0–20 mA input current to I2.

DRV	07	Frequency reference source	Freq Ref Src	5	I2	0–11	-
IN	01	Frequency at maximum analog input	Freq at 100%	60.00		0–Maximum Frequency	Hz
	50	I2 input monitor	I2 Monitor	0.00		0.00–24.00	mA
	52	I2 input filter time constant	I2 Filter	10		0–10000	ms
	53	I2 minimum input current	I2 Curr x1	4.00		0.00–20.00	mA
	54	I2 output at minimum current (%)	I2 Perc y1	0.00		0–100	%
	55	I2 maximum input current	I2 Curr x2	20.00		0.00–24.00	mA
	56	I2 output at maximum current (%)	I2 Perc y2	100.00		0.00–100.00	%
	61	I2 rotation direction options	I2 Inverting	0	No	0–1	-
	62	I2 Quantizing level	I2 Quantizing	0.04		0.00*, 0.04–10.00	%

* Quantizing is disabled if '0' is selected.

www.nicsanat.com
021-87700210
NIC SANAT
نیک صنعت

Input Current (I2) Setting Details

IN-01 Freq at 100%	Configures the frequency reference for operation at the maximum current (when IN-55 is set to 100%). • If IN-01 is set to 40.00, and default settings are used for IN-53–56, 20 mA input current (max) to I2 will produce a frequency reference of 40.00 Hz. • If IN-56 is set to 50.00, and default settings are used for IN-01 (60 Hz) and IN-53–55, 20 mA input current (max) to I2 will produce a frequency reference of 30.00 Hz (50% of 60 Hz).
IN-50 I2 Monitor	Used to monitor input current at I2.
IN-52 I2 Filter	Configures the time for the operation frequency to reach 63% of target frequency based on the input current at I2.
IN-53 I2 Curr x1– IN-56 I2 Perc y2	Configures the gradient level and off-set value of the output frequency. 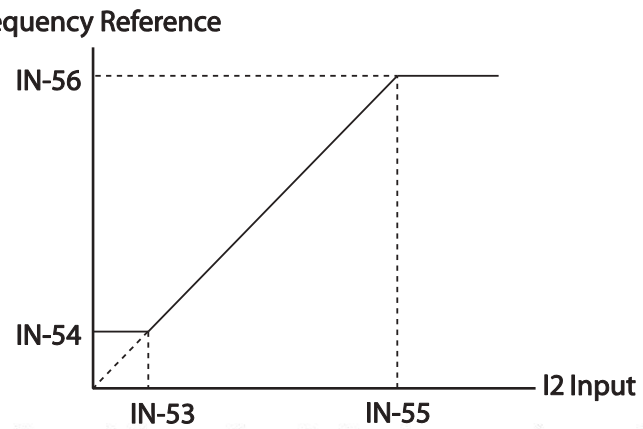 [Gradient and off-set configuration based on output frequency]

www.nicsanat.com
021-87700210
NIC SANAT
نیک صنعت

4.2.4 Setting a Frequency Reference with Input Voltage (Terminal I2)

Set and modify a frequency reference using input voltage at I2 (V2) terminal by setting SW2 to V2. Set the DRV-07 (Frequency reference source) to 4 (V2) and apply 0–12 V input voltage to I2 (=V2, Analog current/voltage input terminal). Codes IN-35–47 will not be displayed when I2 is set to receive current input (DRV-07 is set to '5').

DRV	07	Frequency reference source	Freq Ref Src	4	V2	0–11	-
IN	35	V2 input display	V2 Monitor	0.00		0.00–12.00	V
	37	V2 input filter time constant	V2 Filter	10		0–10000	msec
	38	Minimum V2 input voltage	V2 Volt x1	0.00		0.00–10.00	V
	39	Output% at minimum V2 voltage	V2 Perc y1	0.00		0.00–100.00	%
	40	Maximum V2 input voltage	V2 Volt x2	10.00		0.00–10.00	V
	41	Output% at maximum V2 voltage	V2 Perc y2	100.00		0.00–100.00	%
	46	Invert V2 rotational direction	V2 Inverting	0	No	0–1	-
	47	V2 quantizing level	V2 Quantizing	0.04		0.00*, 0.04–10.00	%

* Quantizing is disabled if '0' is selected.

www.nicsanat.com
021-87700210
NIC SANAT
نیک صنعت

4.2.5 Setting a Frequency with TI Pulse Input

Set a frequency reference by setting the Frq (Frequency reference source) code (code 07) in DRV group to 9 (Pulse) and provide 0–32.00 kHz pulse frequency to TI terminal.

DRV	07	Frequency reference source	Freq Ref Src	9	Pulse	0–11	-
IN	01	Frequency at maximum analog input	Freq at 100%	60.00		0.00–Maximum frequency	Hz
	91	Pulse input display	TI Monitor	0.00		0.00–50.00	kHz
	92	TI input filter time constant	TI Filter	10		0–9999	msec
	93	TI input minimum pulse	TI Pls x1	0.00		0.00–32.00	kHz
	94	Output% at TI minimum pulse	TI Perc y1	0.00		0.00–100.00	%
	95	TI Input maximum pulse	TI Pls x2	32.00		0.00–32.00	kHz
	96	Output% at TI maximum pulse	TI Perc y2	100.00		0.00–100.00	%
	97	Invert TI direction of rotation	TI Inverting	0	No	0–1	-
	98	TI quantizing level	TI Quantizing	0.04		0.00*, 0.04–10.00	%

*Quantizing is disabled if '0' is selected.

www.nicsanat.com
021-87700210
NIC SANAT
نیک صنعت

TI Pulse Input Setting Details

IN-01 Freq at 100%	Configures the frequency reference at the maximum pulse input. The frequency reference is based on 100% of the value set with IN-96. • If IN-01 is set to 40.00 and codes IN-93–96 are set at default, 32 kHz input to TI yields a frequency reference of 40.00 Hz. • If IN-96 is set to 50.00 and codes IN-01, IN-93–95 are set at default, 32 kHz input to the TI terminal yields a frequency reference of 30.00 Hz.
IN-91 TI Monitor	Displays the pulse frequency supplied at TI.
IN-92 TI Filter	Sets the time for the pulse input at TI to reach 63% of its nominal frequency (when the pulse frequency is supplied in multiple steps).
IN-93 TI Pls x1– IN-96 TI Perc y2	Configures the gradient level and offset values for the output frequency. Frequency reference IN-96 IN-94 IN-93 IN-95 TI input
IN-97 TI Inverting– IN-98 TI Quantizing	Identical to IN-16–17 (refer to IN-16 V1 Inverting/IN-17 V1 Quantizing on page 92)

www.nicsanat.com
021-87700210
NIC SANAT
نیک صنعت

4.2.6 Setting a Frequency Reference via RS-485 Communication

Control the inverter with upper-level controllers, such as PCs or PLCs, via RS-485 communication. Set the Frq (Frequency reference source) code (code 07) in the DRV group to 6 (Int 485) and use the RS-485 signal input terminals (S+/S-/SG) for communication. Refer to 7 RS-485 Communication features on page 354.

Group	Code	Name	LCD Display	Parameter Setting		Setting Range	Unit
DRV	07	Frequency reference source	Freq Ref Src	6	Int 485	0–11	-
COM	01	Integrated RS-485 communication inverter ID	Int485 St ID	-	1	1–MaxComID*	-
	02	Integrated communication protocol	Int485 Proto	0	ModBus RTU	0–6	-
				2	LS Inv 485		
				4	BACnet		
				5	Metasys-N2		
				6**	Modbus Master		
	03	Integrated communication speed	Int485 BaudR	3	9600 bps	0–8	-
	04	Integrated communication frame configuration	Int485 Mode	0	D8/PN/S1	0–3	-
				1	D8/PN/S2		
				2	D8/PE/S1		
				3	D8/PO/S1		

*If AP1-40 is set to '4(Serve Drv), MaxComID is '8, and if COM-02 is set to '4(BACnet), MaxComID is '127. Otherwise MaxComID is '250.

** COM-02 is automatically set to '6(Modbus Master)' when AP1-40 is set to '2 or 3. Otherwise a user can set the parameter value at user's choice.

4.3 Frequency Hold by Analog Input

If you set a frequency reference via analog input at the control terminal block, you can hold the operation frequency of the inverter by assigning a multi-function input as the analog frequency hold terminal. The operation frequency will be fixed upon an analog input signal.

DRV	07	Frequency reference source	Freq Ref Src	0	Keypad-1	0–11	-
				1	Keypad-2		
				2	V1		
				4	V2		
				5	I2		
				6	Int 485		
				7	Fied Bus		
				9	Pulse		
				10*	V3		
				11	I3		
IN	65–71	Px terminal configuration	Px Define(Px: P1–P7)	23	Analog Hold	0–55	-

*'10(V3)~11(I3)' of DRV-07 are available when Extension IO option is equipped. Refer to Extension IO option manual for more detailed information.

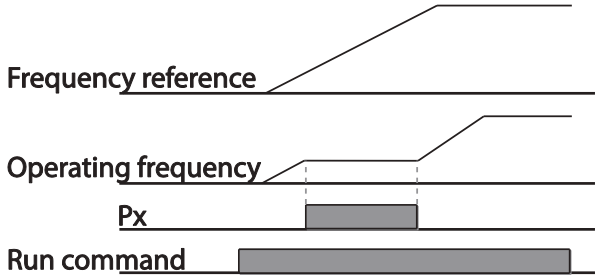

www.nicsanat.com
021-87700210
NIC SANAT
نیک صنعت

4.4 Changing the Displayed Units (Hz↔Rpm)

You can change the units used to display the operational speed of the inverter by setting DRV- 21 (Speed unit selection) to 0 (Hz Display) or 1 (Rpm Display).

DRV	21	Speed unit selection	Hz/Rpm Sel	0	Hz Display	0–1	-
				1	Rpm Display		

4.5 Setting Multi-step Frequency

Multi-step operations can be carried out by assigning different speeds (or frequencies) to the Px terminals. Step 0 uses the frequency reference source set at DRV-07. Px terminal parameter values 7 (Speed-L), 8 (Speed-M) and 9 (Speed-H) are recognized as binary commands and work in combination with Fx or Rx run commands. The inverter operates according to the frequencies set with BAS-50–56 (multi-step frequency 1–7) and the binary command combinations.

BAS	50–56	Multi-step frequency 1–7	Step Freq - 1–7	-		0.00, Low Freq–High Freq*	Hz
IN	65–71	Px terminal configuration	Px Define(Px: P1–P7)	7	Speed-L	0–55	-
				8	Speed-M		-
				9	Speed-H		-
	89	Multi-step command delay time	InCheck Time	1		1–5000	ms

www.nicsanat.com
021-87700210
NIC SANAT
نیک صنعت

Multi-step Frequency Setting Details

Code	Description
BAS Group 50–56	Configure multi-step frequency 1–7.
IN-65–71 Px Define	Choose the terminals to setup as multi-step inputs, and then set the relevant codes (IN-65–71) to 7 (Speed-L), 8 (Speed-M), or 9 (Speed-H). Provided that terminals P5, P6, and P7 have been set to Speed-L, Speed-M and Speed-H respectively, the following multi-step operation will be available. 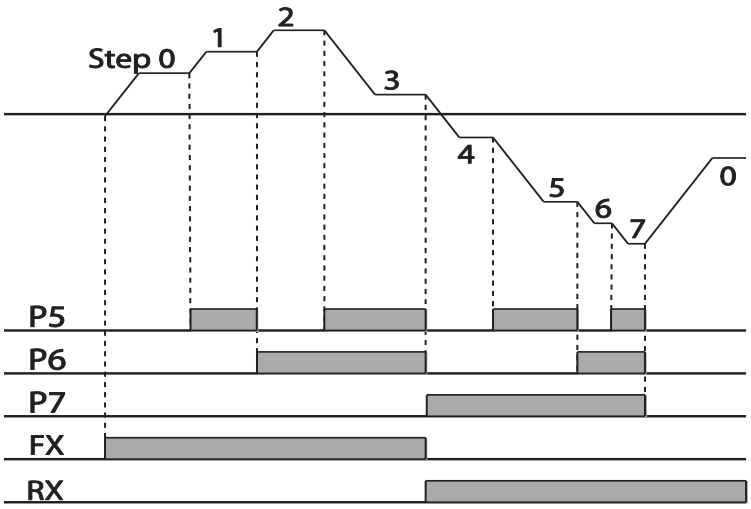 [An example of a multi-step operation]
IN-89 InCheck Time	Set a time interval for the inverter to check for additional terminal block inputs after receiving an input signal. After adjusting IN-89 to 100 ms and an input signal is received at P6, the inverter will search for inputs at other terminals for 100 ms, before proceeding to accelerate or decelerate based on the configuration at P6.

Speed	Fx/Rx	P7	P6	P5
0	✓	-	-	-
1	✓	-	-	✓
2	✓	-	✓	-
3	✓	-	✓	✓
4	✓	✓	-	-
5	✓	✓	-	✓
6	✓	✓	✓	-
7	✓	✓	✓	✓

4.6 Command Source Configuration

Various devices can be selected as command input devices for the H100 inverter. Input devices available to select include keypad, multi-function input terminal, RS-485 communication and field bus adapter.

DRV	06	Command Source	Cmd Source	0	Keypad	0–5	-
				1	Fx/Rx-1		
				2	Fx/Rx-2		
				3	Int 485		
				4	Field Bus		
				5	Time Event		

4.6.1 The Keypad as a Command Input Device

To use the keypad as the command source, press the [AUTO] key to enter AUTO mode. Set DRV-06 to '0 (Keypad)' to select the keypad as the command source and set the operation direction at DRV-02 (Keypad Run Dir).

Since the keypad is now the command source, operation starts when the AUTO key is pressed, and it stops when the AUTO key is pressed again.

The OFF key may be used to stop the operation as well, but the inverter operation mode will be changed to OFF mode.

DRV	06	Command source	Cmd Source	0	KeyPad	0–5	-

www.nicsanat.com
021-87700210
NIC SANAT
نیک صنعت

4.6.2 Terminal Block as a Command Input Device (Fwd/Rev run commands)

Multi-function terminals can be selected as a command input device. This is configured by setting DRV-06 (command source) in the Drive group to '1 (Fx/Rx)'. Select 2 terminals for the forward and reverse operations, and then set the relevant codes (2 of the 7 multi-function terminal codes, IN-65–71 for P1–P7) to '1 (Fx)' and '2 (Rx)' respectively. This application enables both terminals to be turned on or off at the same time, constituting a stop command that will cause the inverter to stop operation.

IN	02	Operation direction for Keypad	Keypad Run Dir	0	Reverse	0–1	-
				1	Forward		
DRV	06	Command source	Cmd Source	1	Fx/Rx-1	0–5	-
IN	65–71	Px terminal configuration	Px Define(Px: P1– P7)	1	Fx	0–55	-
				2	Rx		

Fwd/Rev Command by Multi-function Terminal – Setting Details

DRV-06Cmd Source	Set to 1 (Fx/Rx-1).
IN-65–71 Px Define	Assign a terminal for forward (Fx) operation. Assign a terminal for reverse (Rx) operation.

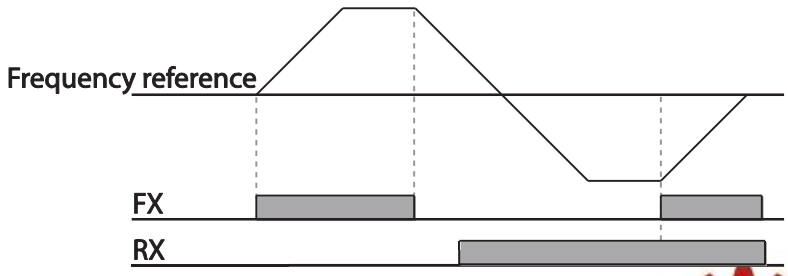

www.nicsanat.com
021-87700210
NIC SANAT
نیک صنعت

4.6.3 Terminal Block as a Command Input Device (Run and Rotation Direction Commands)

Multi-function terminals can be selected as a command input device. This is configured by setting DRV-06 (command source) in the Drive group to 2(Fx/Rx-2). Select 2 terminals for run and rotation direction commands, and then select the relevant codes (2 of the 5 multi-function terminal codes, IN-65–71 for P1–P7) to 1 (Fx) and 2 (Rx) respectively. This application uses an Fx input as a run command, and an Rx input to change a motor's rotation direction (On: Rx, Off: Fx).

DRV	06	Command source	Cmd Source	2	Fx/Rx-2	0–5	-
IN	65–71	Px terminal configuration	Px Define (Px: P1 – P7)	1	Fx	0–55	-
				2	Rx		

Run Command and Fwd/Rev Change Command Using Multi-function Terminal – Setting Details

DRV-06 Cmd Source	Set to '2 (Fx/Rx-2)'.
IN-65–71 Px Define	Assign a terminal for run command (Fx). Assign a terminal for changing rotation direction (Rx).

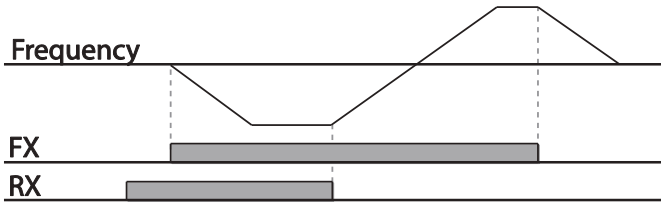

www.nicsanat.com
021-87700210
NIC SANAT
نیک صنعت

4.6.4 RS-485 Communication as a Command Input Device

Internal RS-485 communication can be selected as a command input device by setting DRV-06 (command source) in the Drive group to '3 (Int 485)'. This configuration uses upper level controllers such as PCs or PLCs to control the inverter by transmitting and receiving signals via the S+, S-, and RS-485 signal input terminals at the terminal block. For more details, refer to 7 *RS-485 Communication Features* on page *354*.

DRV	06	Command source	Cmd Source	3	Int 485	0–5	-
COM	01	Integrated communication inverter ID	Int485 St ID	1		1–MaxComID*	-
	02	Integrated communication protocol	Int485 Proto	0	ModBus RTU	0–6	-
	03	Integrated communication speed	Int485 BaudR	3	9600 bps	0–8	-
	04	Integrated communication frame setup	Int485 Mode	0	D8 / PN / S1	0–3	-

*If AP1-40 is set to '4(Serve Drv), MaxComID is '8, and if COM-02 is set to '4(BACnet), MaxComID is '127. Otherwise MaxComID is '250'

www.nicsanat.com
021-87700210
NIC SANAT
نیک صنعت

4.7 Forward or Reverse Run Prevention

The rotation direction of motors can be configured to prevent motors to only run in one direction. Pressing the [REV] key on the keypad when direction prevention is configured, will cause the motor to decelerate to 0 Hz and stop. The inverter will remain on.

ADV	09	Run prevention options	Run Prevent	0	None	0–2	-
				1	Forward Prev		
				2	Reverse Prev		

Forward/Reverse Run Prevention Setting Details

ADV-09 Run Prevent	Choose a direction to prevent.

Setting		Description
0	None	Do not set run prevention.
1	Forward Prev	Set forward run prevention.
2	Reverse Prev	Set reverse run prevention.

www.nicsanat.com
021-87700210
NIC SANAT
نیک صنعت

4.8 Power-on Run

A power-on run feature can be setup to start an inverter operation after powering up based on the run commands by terminal inputs or communication (if they are configured). In AUTO mode, the inverter starts operating at power-on when the following conditions are met.

Terminal block input as the command source

(If they have been configured). To enable power-on run, set DRV-06 (command source) to '1 (Fx/Rx-1)' or '2 (Fx/Rx-2)' in the Drive group and ADV-10 to '1' in the Advanced group.

DRV	06	Command source	Cmd Source	1, 2	Fx/Rx-1 or Fx/Rx-2	0–5	-
ADV	10	Power-on run	Power-on Run	1	Yes	0–1	-

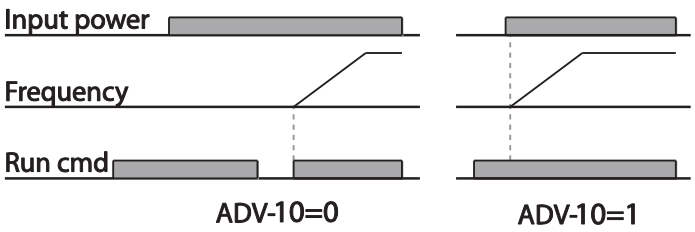

www.nicsanat.com
021-87700210
NIC SANAT
نیک صنعت

Communication as the command source

To enable power-on resume, set COM-96 (PowerOn Resume) to 'YES', and set DRV-06 to '3 (Int 485)' or '4 (Field Bus)'. If the power input to the inverter is cut off due to a power interruption, the inverter memorizes the run command, frequency reference, and the acc/dec time settings at the time of power interruption. If COM-96 (PowerOn Resume) is set to 'Yes', the inverter starts operating based on these settings as soon as the power supply resumes.

Group	Code	Name	LCD Display	Settings		Setting Range	Unit
DRV	06	Command source	Cmd Source	3	Int 485	0 - 5	-
				4	Field Bus		
COM	96	Power-on resume	PowerOn Resume	0	No	0 - 1	-
				1	Yes		

Note

- To prevent a repeat fault trip from occurring, set CON-71 (speed search options) bit 4 the same as bit 1. The inverter will perform a speed search at the beginning of the operation.
- If the speed search is not enabled, the inverter will start its operation in a normal V/F pattern and accelerate the motor. If the inverter has been turned on without 'reset and restart' enabled, the terminal block command must be first turned off, and then turned on again to begin the inverter's operation.

Caution

Use caution when operating the inverter with Power-on Run enabled as the motor will begin rotating when the inverter starts up.

www.nicsanat.com
021-87700210
NIC SANAT
نیک صنعت

4.9 Reset and Restart

Reset and restart operations can be setup for inverter operation following a fault trip, based on the terminal block operation command (if it is configured). When a fault trip occurs, the inverter cuts off the output and the motor will free-run. Another fault trip may be triggered if the inverter begins its operation while motor load is in a free-run state. In PRT-08, bit 1 sets the option for all the fault trips, other than low voltage trips, and bit 2 sets the option for low voltage trips. PRT-10 sets the delay time for restart (the time for the inverter to wait before it restarts).

The number of auto-restarts (PRT-09) refers to the number of times the inverter will try restarting its operation. If fault trips occur again after restart, the retry number counts down each time the inverter restarts until the number becomes '0.' Once the inverter restarts successfully after the initial fault trip, the inverter does not restart until the next fault trip occurs. The number of auto-restarts set at PRT-09 that decreased after a restart reverts to the original setting value if successful operation continues for certain period of time.

DRV	06	Command source	Cmd Source	1	Fx/Rx-1	0–5	-
PRT	08	Reset restart setup	RST Restart	00		00–11	Bit
	09	No. of auto restart	Retry Number	6		0–10	-
	10	Auto restart delay time	Retry Delay	5.0		0.1–600.0	sec

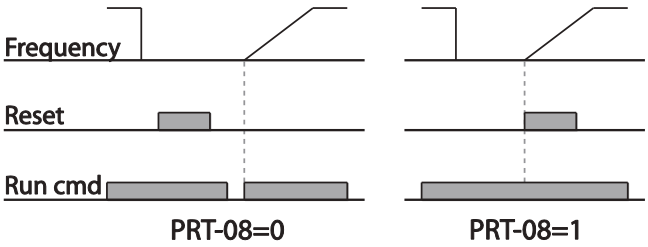

www.nicsanat.com
021-87700210
NIC SANAT
نیک صنعت

Note

- To prevent a repeat fault trip from occurring, set CON-71 (speed search options) bit 2 the same as bit 1. The inverter will perform a speed search at the beginning of the operation.
- If the speed search is not enabled, the inverter will start its operation in a normal V/F pattern and accelerate the motor. If the inverter has been turned on without 'reset and restart' enabled, the terminal block command must be first turned off, and then turned on again to begin the inverter's operation.

Caution

Use caution when operating the inverter with Power-on Run enabled as the motor will begin rotating when the inverter starts up.

4.10 Setting Acceleration and Deceleration Times

4.10.1 Acc/Dec Time Based on Maximum Frequency

Acc/Dec time values can be set based on maximum frequency, not on inverter operation frequency. To set Acc/Dec time values based on maximum frequency, set BAS- 08 (Acc/Dec reference) in the Basic group to '0 (Max Freq)'.

Acceleration time set at DRV-03 (Acceleration time) refers to the time required for the inverter to reach the maximum frequency from a stopped (0 Hz) state. Likewise, the value set at the DRV-04 (Deceleration time) refers to the time required to return to a stopped state (0 Hz) from the maximum frequency.

Group	Code	Name	LCD Display	Parameter Setting		Setting Range	Unit
DRV	03	Acceleration time	Acc Time	20.0	0.75~90KW	0.0–600.0	sec
				60.0	110~250KW		
				100.0	315~500KW		
	04	Deceleration time	Dec Time	30.0	0.75~90KW	0.0–600.0	Sec
				90.0	110~250KW		
				150.0	315~500KW		

Group	Code	Name	LCD Display	Parameter Setting		Setting Range	Unit
	20	Maximum frequency	Max Freq	60.00		40.00–400.00	Hz
BAS	08	Acc/Dec reference frequency	Ramp T Mode	0	Max Freq	0–1	-
	09	Time scale	Time scale	1	0.1 sec	0–2	-

Acc/Dec Time Based on Maximum Frequency – Setting Details

Code	Description
BAS-08 Ramp T Mode	Set the parameter value to 0 (Max Freq) to setup Acc/Dec time based on maximum frequency. Configuration: 0 Max Freq – Set the Acc/Dec time based on maximum frequency. Configuration: 1 Delta Freq – Set the Acc/Dec time based on operating frequency. If, for example, maximum frequency is 60.00 Hz, the Acc/Dec times are set to 5 seconds, and the frequency reference for operation is set at 30 Hz (half of 60 Hz), the time required to reach 30 Hz therefore is 2.5 seconds (half of 5 seconds). Max. Freq. / Frequency / Run cmd / Acc. time / Dec. time
BAS-09 Time scale	Use the time scale for all time-related values. It is particularly useful when a more accurate Acc/Dec times are required because of load characteristics, or when the maximum time range needs to be extended. Configuration: 0 0.01 sec – Sets 0.01 second as the minimum unit. Configuration: 1 0.1 sec – Sets 0.1 second as the minimum unit. Configuration: 2 1 sec – Sets 1 second as the minimum unit.

Caution

Note that the range of maximum time values may change automatically when the units are changed. If for example, the acceleration time is set at 6000 seconds, a time scale change from 1

www.nicsanat.com
021-87700210
NIC SANAT
نیک صنعت

second to 0.01 second will result in a modified acceleration time of 60.00 seconds.

www.nicsanat.com
021-87700210
NIC SANAT
نیک صنعت

4.10.2 Acc/Dec Time Based on Operation Frequency

Acc/Dec times can be set based on the time required to reach the next step frequency from the existing operation frequency. To set the Acc/Dec time values based on the existing operation frequency, set BAS-08 (acc/dec reference) in the Basic group to '1 (Delta Freq)'.

Group	Code	Name	LCD Display	Settings		Setting Range	Unit
DRV	03	Acceleration time	Acc Time	20.0	0.75~90KW	0.0 - 600.0	sec
				60.0	110~250KW		
				100.0	315~500KW		
	04	Deceleration time	Dec Time	30.0	0.75~90KW	0.0 - 600.0	sec
				90.0	110~250KW		
				150.0	315~500KW		
BAS	08	Acc/Dec reference	Ramp T Mode	1	Delta Freq	0 - 1	-

Acc/Dec Time Based on Operation Frequency – Setting Details

Code	Description
BAS-08 Ramp T Mode	Set the parameter value to 1 (Delta Freq) to set Acc/Dec times based on Maximum frequency.

Configuration		Description
0	Max Freq	Set the Acc/Dec time based on Maximum frequency.
1	Delta Freq	Set the Acc/Dec time based on Operation frequency.

If Acc/Dec times are set to 5 seconds, and multiple frequency references are used in the operation in 2 steps, at 10 Hz and 30 Hz, each acceleration stage will take 5 seconds (refer to the graph below).

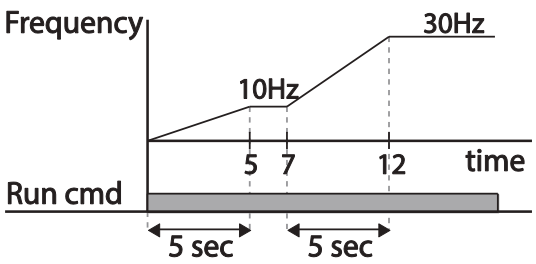

4.10.3 Multi-step Acc/Dec Time Configuration

Acc/Dec times can be configured via a multi-function terminal by setting the ACC (acceleration time) and DEC (deceleration time) codes in the DRV group.

DRV	03	Acceleration time	Acc Time	20.0	0.75~90KW	0.0–600.0	sec
				60.0	110~250KW		
				100.0	315~500KW		
	04	Deceleration time	Dec Time	30.0	0.75 ~90KW	0.0–600.0	sec
				90.0	110~250KW		
				150.0	315~500KW		
BAS	70–83	Multi-step acceleration/Deceleration time1–7	Acc Time 1–7	x.xx		0.0–600.0	sec
			Dec Time 1–7	x.xx		0.0–600.0	sec
IN	65–71	Px terminal configuration	Px Define (Px: P1–P7)	11	XCEL-L	0–55	-
				12	XCEL-M		
				13	XCEL-H		
	89	Multi-step command delay time	In Check Time	1		1–5000	ms

www.nicsanat.com
021-87700210
NIC SANAT
نیک صنعت

Acc/Dec Time Setup via Multi-function Terminals – Setting Details

<table>
<tr><th>Code</th><th>Description</th></tr>
<tr><td>BAS-70–82
Acc Time 1–7</td><td>Set multi-step acceleration time1–7.</td></tr>
<tr><td>BAS-71–83
Dec Time 1–7</td><td>Set multi-step deceleration time1–7.</td></tr>
<tr><td>IN-65–71
Px Define (P1–P7)</td><td>Choose and configure the terminals to use for multi-step Acc/Dec time inputs
<table>
<tr><th colspan="2">Configuration</th><th>Description</th></tr>
<tr><td>11</td><td>XCEL-L</td><td>Acc/Dec command-L</td></tr>
<tr><td>12</td><td>XCEL-M</td><td>Acc/Dec command-M</td></tr>
<tr><td>13</td><td>XCEL-H</td><td>Acc/Dec command-H</td></tr>
</table>
Acc/Dec commands are recognized as binary code inputs and will control the acceleration and deceleration based on parameter values set with BAS-70–82 and BAS-71–83.
If, for example, the P6 and P7 terminals are set as XCEL-L and XCEL-M respectively, the following operation will be available.
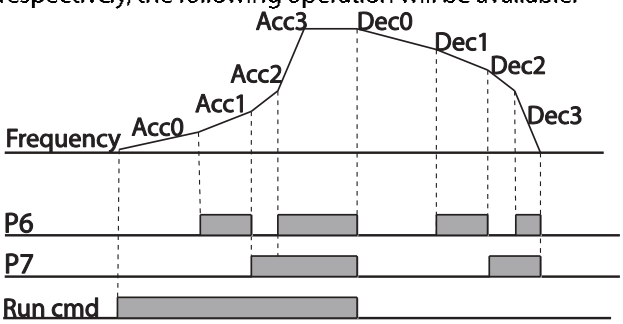

<table>
<tr><th>Acc/Dec time</th><th>P7</th><th>P6</th></tr>
<tr><td>0</td><td>-</td><td>-</td></tr>
<tr><td>1</td><td>-</td><td>✓</td></tr>
<tr><td>2</td><td>✓</td><td>-</td></tr>
<tr><td>3</td><td>✓</td><td>✓</td></tr>
</table>
[Multi-function terminal P6, P7 configuration]</td></tr>
<tr><td>IN-89 In Check Time</td><td>Set the time for the inverter to check for other terminal block inputs. If IN-89 is set to 100 ms and a signal is supplied to the P6 terminal, the inverter searches for other inputs over the next 100 ms. When the time expires, the Acc/Dec time will be set based on the input received at P6</td></tr>
</table>

4.10.4 Configuring Acc/Dec Time Switch Frequency

You can switch between two different sets of Acc/Dec times (Acc/Dec gradients) by configuring the switch frequency without configuring the multi-function terminals.

DRV	03	Acceleration time	Acc Time	20.0	0.75~90KW	0.0–600.0	sec
				60.0	110~250KW		
				100.0	315~500KW		
	04	Deceleration time	Dec Time	30.0	0.75~90KW	0.0–600.0	sec
				90.0	110~250KW		
				150.0	315~500KW		
BAS	70	Multi-step acceleration time1	Acc Time-1	20.0		0.0–600.0	sec
	71	Multi-step deceleration time1	Dec Time-1	20.0		0.0–600.0	sec
ADV	60	Acc/Dec time switch frequency	Xcel Change Fr	30.00		0–Maximum frequency	Hz

Acc/Dec Time Switch Frequency Setting Details

ADV-60 Xcel Change Fr	After the Acc/Dec switch frequency has been set, Acc/Dec gradients configured at BAS-70 and 71 will be used when the inverter's operation frequency is at or below the switch frequency. If the operation frequency exceeds the switch frequency, the gradient level configured for the acceleration and deceleration times (set at DRV-03 and DRV-04) will be used. If you configure the P1–P7 multi-function input terminals for multi-step Acc/Dec gradients (XCEL-L, XCEL-M, XCEL-H), the inverter will operate based on the Acc/Dec inputs at the terminals instead of the Acc/Dec switch frequency configurations. The 'Xcel Change Fr' parameter is applied only when ADV-24 (Freq Limit Mode) is set to 'NO'.

www.nicsanat.com
021-87700210
NIC SANAT
نیک صنعت

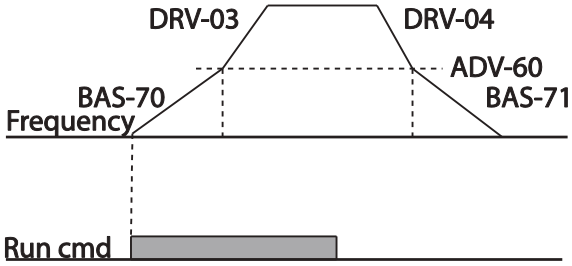

4.11 Acc/Dec Pattern Configuration

Acc/Dec gradient level patterns can be configured to enhance and smooth the inverter's acceleration and deceleration curves. Linear pattern features a linear increase or decrease to the output frequency, at a fixed rate. For an S-curve pattern a smoother and more gradual increase or decrease of output frequency, ideal for lift-type loads or elevator doors, etc. S-curve gradient level can be adjusted using codes ADV-03–06 in the advanced group.

BAS	08	Acc/Dec reference	Ramp T mode	0	Max Freq	0–1	-
ADV	01	Acceleration pattern	Acc Pattern	0	Linear	0–1	-
	02	Deceleration pattern	Dec Pattern	1	S-curve		-
	03	S-curve Acc start gradient	Acc S Start	40		1–100	%
	04	S-curve Acc end gradient	Acc S End	40		1–100	%
	05	S-curve Dec start gradient	Dec S Start	40		1–100	%
	06	S-curve Dec end gradient	Dec S End	40		1–100	%

Acc/Dec Pattern Setting Details

www.nicsanat.com
021-87700210
NIC SANAT
نیک صنعت

ADV-03 Acc S Start	Sets the gradient level as acceleration starts when using an S-curve, Acc/Dec pattern. ADV-03 defines S-curve gradient level as a percentage, up to half of total acceleration. If the frequency reference and maximum frequency are set at 60 Hz and ADV-03 is set to 50%, ADV-03 configures acceleration up to 30 Hz (half of 60 Hz). The inverter will operate S-curve acceleration in the 0-15 Hz frequency range (50% of 30 Hz). Linear acceleration will be applied to the remaining acceleration within the 15–30 Hz frequency range.
ADV-04 Acc S End	Sets the gradient level as acceleration ends when using an S-curve Acc/Dec pattern. ADV-03 defines S-curve gradient level as a percentage, above half of total acceleration. If the frequency reference and the maximum frequency are set at 60 Hz and ADV-04 is set to 50%, setting ADV-04 configures acceleration to increase from 30 Hz (half of 60 Hz) to 60 Hz (end of acceleration). Linear acceleration will be applied within the 30-45 Hz frequency range. The inverter will perform an S-curve acceleration for the remaining acceleration in the 45–60 Hz frequency range.
ADV-05 Dec S Start – ADV-06 Dec S End	Sets the rate of S-curve deceleration. Configuration for codes ADV-05 and ADV-06 may be performed the same way as configuring codes ADV-03 and ADV-04.

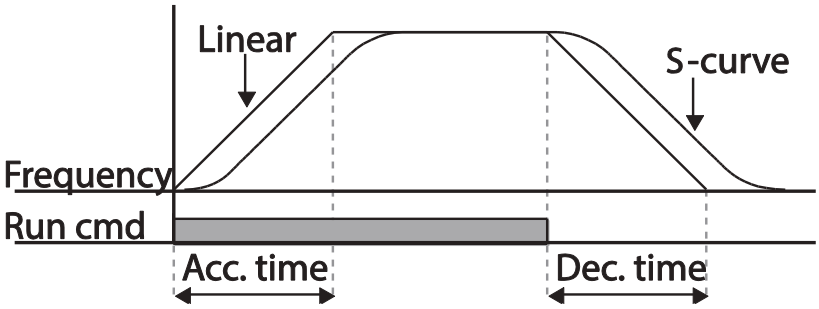

[Acceleration / deceleration pattern configuration]

www.nicsanat.com
021-87700210
NIC SANAT
نیک صنعت

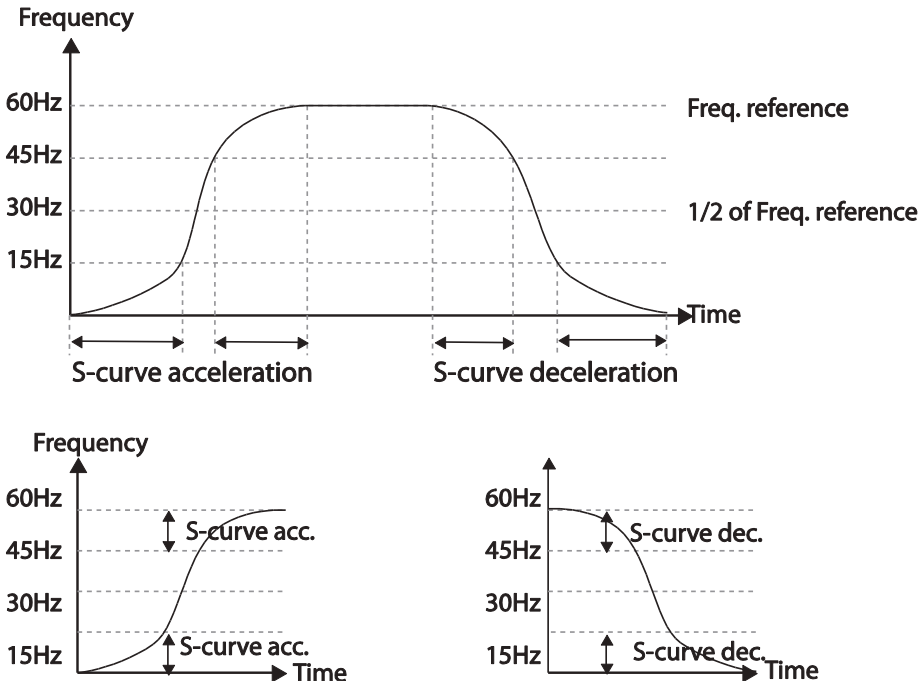

[Acceleration / deceleration S-curve pattern configuration]

Note

The Actual Acc/Dec time during an S-curve application
Actual acceleration time = user-configured acceleration time + user-configured acceleration time x starting gradient level/2 + user-configured acceleration time x ending gradient level/2.
Actual deceleration time = user-configured deceleration time + user-configured deceleration time x starting gradient level/2 + user-configured deceleration time x ending gradient level/2.

Caution

Note that actual Acc/Dec times become greater than user defined Acc/Dec times when S-curve Acc/Dec patterns are in use.

4.12 Stopping the Acc/Dec Operation

Configure the multi-function input terminals to stop acceleration or deceleration and operate the inverter at a fixed frequency.

IN	65–71	Px terminal configuration	Px Define (Px: P1– P7)	14	XCEL Stop	0–55	-

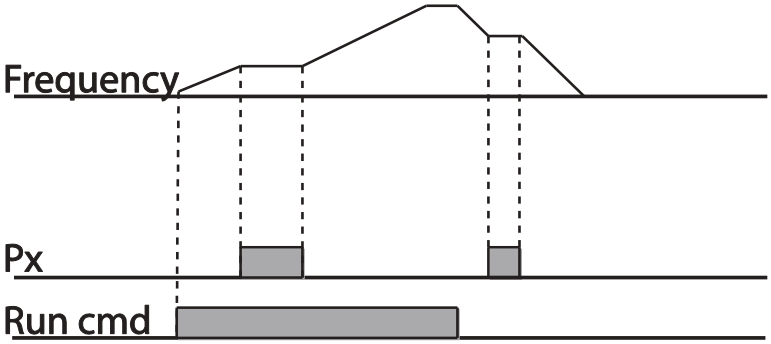

www.nicsanat.com
021-87700210
NIC SANAT
نیک صنعت

4.13 V/F (Voltage/Frequency) Control

Configure the inverter's output voltages, gradient levels, and output patterns to achieve a target output frequency with V/F control. The amount of torque boost used during low frequency operations can also be adjusted.

4.13.1 Linear V/F Pattern Operation

A linear V/F pattern configures the inverter to increase or decrease the output voltage at a fixed rate for different operation frequencies based on V/F characteristics. A linear V/F pattern is particularly useful when a constant torque load is applied.

Group	Code	Name	LCD Display	Parameter Setting		Setting Range	Unit
IN	09	Control mode	Control Mode	0	V/F	0–1	-
	18	Base frequency	Base Freq	60.00		30.00–400.00	Hz
	19	Start frequency	Start Freq	0.50		0.01–10.00	Hz
BAS	07	V/F pattern	V/F Pattern	0	Linear	0–3	-

Linear V/F Pattern Setting Details

Code	Description
DRV-18 Base Freq	Sets the base frequency. A base frequency is the inverter's output frequency when running at its rated voltage. Refer to the motor's rating plate to set this parameter value.
DRV-19 Start Freq	Sets the start frequency. A start frequency is a frequency at which the inverter starts voltage output. The inverter does not produce output voltage while the frequency reference is lower than the set frequency. However, if a deceleration stop is made while operating above the start frequency, output voltage will continue until the operation frequency reaches a full-stop (0 Hz). 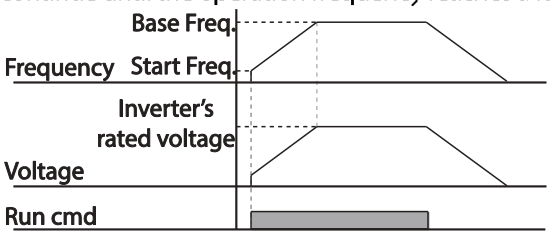

4.13.2 Square Reduction V/FPattern Operation

Square reduction V/F pattern is ideal for loads such as fans and pumps. It provides non-linear acceleration and deceleration patterns to sustain torque throughout the whole frequency range.

BAS	07	V/F pattern	V/F Pattern	1	Square	0–3	-
				3	Square2		

Square Reduction V/F pattern Operation - Setting Details

BAS-07 V/F Pattern	Sets the parameter value to '1 (Square)' or '2 (Square2)' according to the load's start characteristics.

Setting		Function
1	Square	The inverter produces output voltage proportional to 1.5 square of the operation frequency.
3	Square2	The inverter produces output voltage proportional to 2 square of the operation frequency. This setup is ideal for variable torque loads such as fans or pumps.

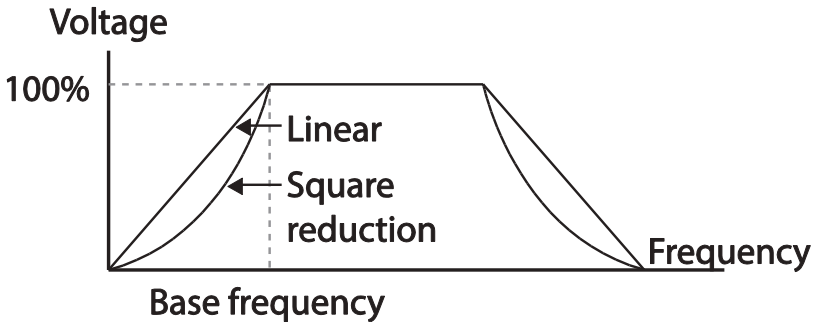

www.nicsanat.com
021-87700210
NIC SANAT
نیک صنعت

4.13.3 User V/F Pattern Operation

The H100 inverter allows the configuration of user-defined V/F patterns to suit the load characteristics of special motors.

BAS	07	V/F pattern	V/F Pattern	2	User V/F	0–3	-
	41	User Frequency 1	User Freq 1	15.00		0–Maximum frequency	Hz
	42	User Voltage 1	User Volt 1	25		0–100%	%
	43	User Frequency 2	User Freq 2	30.00		0–Maximum frequency	Hz
	44	User Voltage 2	User Volt 2	50		0–100%	%
	45	User Frequency 3	User Freq 3	45.00		0–Maximum frequency	Hz
	46	User Voltage 3	User Volt 3	75		0–100%	%
	47	User Frequency 4	User Freq 4	Maximum frequency		0–Maximum frequency	Hz
	48	User Voltage 4	User Volt 4	100		0–100%	%

User V/F pattern Setting Details

BAS-41 User Freq 1 –BAS-48 User Volt 4	Set the parameter values to assign arbitrary frequencies (User Freq x) for start and maximum frequencies. Voltages can also be set to correspond with each frequency, and for each user voltage (User Volt x).

The 100% output voltage in the figure below is based on the parameter settings of BAS-15 (motor rated voltage). If BAS-15 is set to '0' it will be based on the input voltage.

www.nicsanat.com
021-87700210
NIC SANAT
نیک صنعت

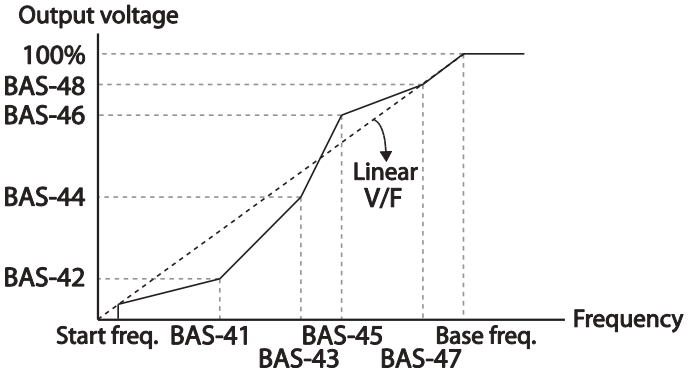

Caution

- When a normal induction motor is in use, care must be taken not to configure the output pattern away from a linear V/F pattern. Non-linear V/F patterns may cause insufficient motor torque or motor overheating due to over-excitation.
- When a user V/F pattern is in use, forward torque boost (DRV-16) and reverse torque boost (DRV-17) do not operate.

www.nicsanat.com
021-87700210
NIC SANAT
نیک صنعت

4.14 Torque Boost

4.14.1 Manual Torque Boost

Manual torque boost enables users to adjust output voltage during low speed operation or motor start. Increase low speed torque or improve motor starting properties by manually increasing output voltage. Configure manual torque boost while running loads that require high starting torque, such as lift-type loads.

Group	Code	Name	LCD Display	Parameter Setting		Setting Range	Unit
DRV	15	Torque boost options	Torque Boost	0	Manual	0–2	-
	16	Forward torque boost	Fwd Boost	2.0	0.75~90kW	0.0–15.0	%
				1.0	110~500kW		
	17	Reverse torque boost	Rev Boost	2.0	0.75~90kW	0.0–15.0	%
				1.0	110~500kW		

Manual Torque Boost Setting Details

Code	Description
DRV-16 Fwd Boost	Set torque boost for forward operation.
DRV-17 Rev Boost	Set torque boost for reverse operation.

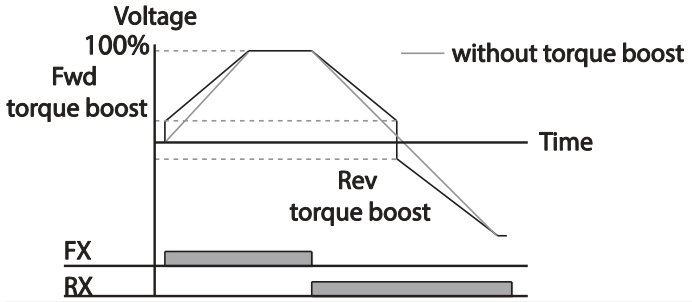

Caution

Excessive torque boost will result in over-excitation and motor overheating

4.14.2 Auto Torque Boost

Set DRV-15 to 'Auto 1' or 'Auto 2' to select the type of torque boost. While manual torque boost adjusts the inverter output based on the setting values regardless of the type of load used in the operation, auto torque boost enables the inverter to automatically calculate the amount of output voltage required for torque boost based on the entered motor parameters. Because auto torque boost requires motor-related parameters such as stator resistance, inductance, and no-load current, auto tuning (BAS-20) has to be performed before auto torque boost can be configured. Similarly to manual torque boost, configure auto torque boost while running a load that requires high starting torque, such as lift-type loads. Refer to *5.21 Auto Tuning* on page *219*.

DRV	15	torque boost mode	Torque Boost	1	Auto 1	0–2	-
BAS	20	auto tuning	Auto Tuning	3	Rs+Lsigma	0–3	-

4.14.3 Auto Torque Boost 2 (No Motor Parameter Tuning Required)

By adjusting the auto torque boost voltage gain set at DRV-15 (ATB Volt Gain), automatic torque boost may be operated without tuning the motor-related parameter values. The DRV-15 (ATB Volt Gain) value is used to adjust the amount of compensation required for each load. It prevents stalls or overcurrent fault trips at start up.

DRV	15	Torque boost mode	Torque Boost	2	Auto 2	0–2	-
CON	21	Auto torque boost filter gain	ATB Filt Gain	10		1 - 9999	msec
CON	22	Auto torque boost voltage gain	ATB Volt Gain	100.0		0 - 300.0	%

www.nicsanat.com
021-87700210
NIC SANAT
نیک صنعت

4.15 Output Voltage Setting

Output voltage settings are required when a motor's rated voltage differs from the input voltage to the inverter. Set BAS-15 to configure the motor's rated operating voltage. The set voltage becomes the output voltage of the inverter's base frequency. When the inverter operates above the base frequency, and when the motor's voltage rating is lower than the input voltage at the inverter, the inverter adjusts the voltage and supplies the motor with the voltage set at BAS-15 (motor rated voltage). If the motor's rated voltage is higher than the input voltage at the inverter, the inverter will supply the inverter input voltage to the motor.

If BAS-15 (motor rated voltage) is set to '0', the inverter corrects the output voltage based on the input voltage in the stopped condition. If the frequency is higher than the base frequency, when the input voltage is lower than the parameter setting, the input voltage will be the inverter output voltage.

BAS	15	Motor rated voltage	Rated Volt	0	0, 170–500	V

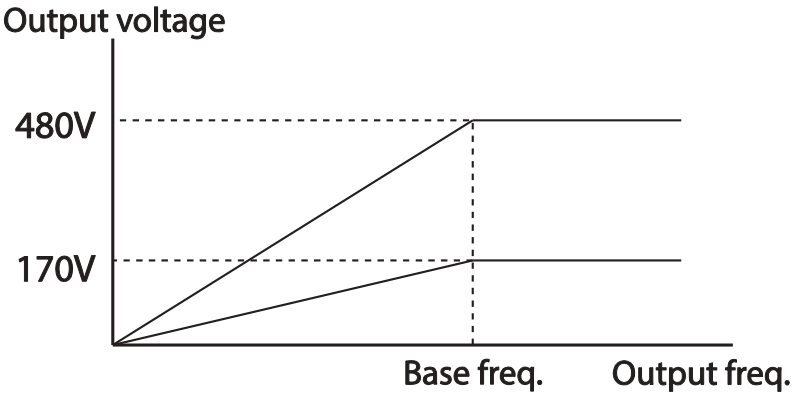

www.nicsanat.com
021-87700210
NIC SANAT
نیک صنعت

4.16 Start Mode Setting

Select the start mode to use when the operation command is input with the motor in the stopped condition.

4.16.1 Acceleration Start

Acceleration start is a general acceleration mode. If there are no extra settings applied, the motor accelerates directly to the frequency reference when the command is input.

Group	Code	Name	LCD Display	Parameter Setting		Setting Range	Unit
ADV	07	Start mode	Start mode	0	Acc	0–1	-

4.16.2 Start After DC Braking

This start mode supplies a DC voltage for a set amount of time to provide DC braking before an inverter starts to accelerate a motor. If the motor continues to rotate due to its inertia, DC braking will stop the motor, allowing the motor to accelerate from a stopped condition. DC braking can also be used with a mechanical brake connected to a motor shaft when a constant torque load is applied, if a constant torque is required after the the mechanical brake is released.

Group	Code	Name	LCD Display	Parameter Setting		Setting Range	Unit
ADV	07	Start mode	Start Mode	1	DC-Start	0–1	-
	12	Start DC braking time	DC-Start Time	0.00		0.00–60.00	sec
	13	DC Injection Level	DC Inj Level	50		0–200	%

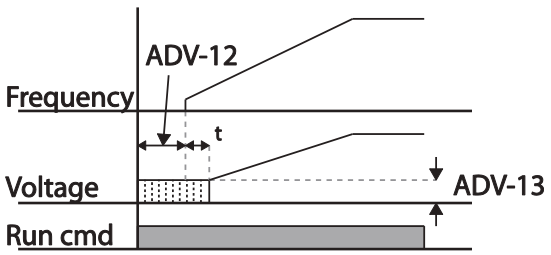

Caution

The amount of DC braking required is based on the motor's rated current. Do not use DC braking resistance values that can cause current draw to exceed the rated current of the inverter. If the DC braking resistance is too high or brake time is too long, the motor may overheat or be damaged

4.17 Stop Mode Setting

Select a stop mode to stop the inverter operation.

4.17.1 Deceleration Stop

Deceleration stop is a general stop mode. If there are no extra settings applied, the motor decelerates down to 0 Hz and stops, as shown in the figure below.

Group	Code	Name	LCD Display	Parameter Setting		Setting Range	Unit
ADV	08	Stop mode	Stop Mode	0	Dec	0–4	-

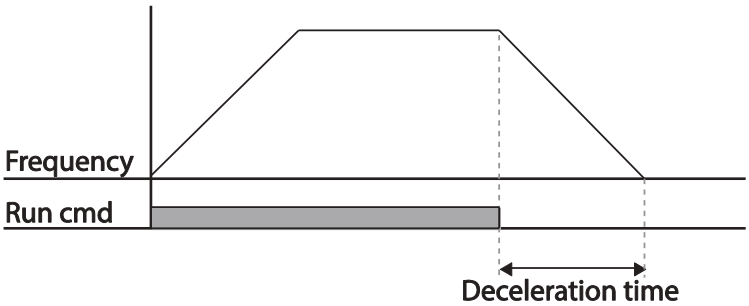

www.nicsanat.com
021-87700210
NIC SANAT
نیک صنعت

4.17.2 Stop After DC Braking

When the operation frequency reaches the set value during deceleration (DC braking frequency) the inverter stops the motor by supplying DC power to the motor. With a stop command input, the inverter begins decelerating the motor. When the frequency reaches the DC braking frequency set at ADV-17, the inverter supplies DC voltage to the motor and stops it.

Group	Code	Name	LCD Display	Parameter Setting		Setting Range	Unit
ADV	08	Stop mode	Stop Mode	1	DC Brake	0–4	-
	14	Output block time before braking	DC-Block Time	0.00	0.75~90kW	0.00–60.00	sec
				2.00	110~500kW		
	15	DC braking time	DC-Brake Time	1.00		0–60	sec
	16	DC braking amount	DC-Brake Level	50		0–200	%
	17	DC braking frequency	DC-Brake Freq	5.00		0.00–60.00	Hz

DC Braking After Stop Setting Details

Code	Description
ADV-14 DC-Block Time	Set the time to block the inverter output before DC braking. If the inertia of the load is great, or if DC braking frequency (ADV-17) is set too high, a fault trip may occur due to overcurrent conditions when the inverter supplies DC voltage to the motor. Prevent overcurrent fault trips by adjusting the output block time before DC braking.
ADV-15 DC-Brake Time	Set the time duration for the DC voltage supply to the motor.
ADV-16 DC-Brake Level	Set the amount of DC braking to apply. The parameter setting is based on the rated current of the motor.
ADV-17 DC-Brake Freq	Set the frequency to start DC braking. When the frequency is reached, the inverter starts deceleration. If the dwell frequency is set lower than the DC braking frequency, dwell operation will not work and DC braking will start instead.

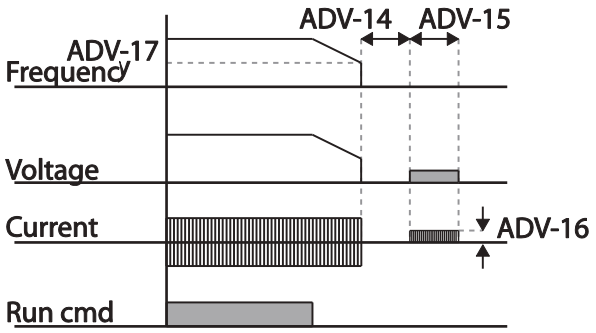

Caution

- Note that the motor can overheat or be damaged if excessive amount of DC braking is applied to the motor or DC braking time is set too long.
- DC braking is configured based on the motor's rated current. To prevent overheating or damaging motors, do not set the current value higher than the inverter's rated current.

4.17.3 Free Run Stop

When the Operation command is off, the inverter output turns off, and the load stops due to residual inertia.

Group	Code	Name	LCD Display	Parameter Setting		Setting Range	Unit
ADV	08	Stop Method	Stop mode	2	Free-Run	0–4	-

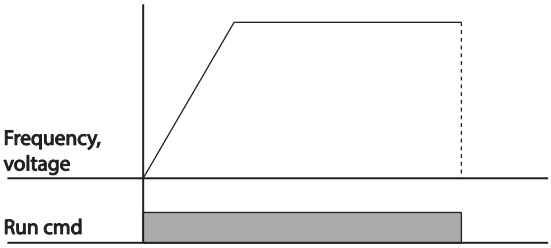

Caution

Note that when there is high inertia on the output side and the motor is operating at high speed, the load's inertia will cause the motor to continue rotating even if the inverter output is blocked

4.17.4 Power Braking

When the inverter's DC voltage rises above a specified level due to motor regenerated energy a control is made to either adjust the deceleration gradient level or reaccelerate the motor in order to reduce the regenerated energy. Power braking can be used when short deceleration times are needed without brake resistors, or when optimum deceleration is needed without causing an over voltage fault trip.

Group	Code	Name	LCD Display	Parameter Setting		Setting Range	Unit
ADV	08	Stop mode	Stop Mode	4	Power Braking	0–4	-

Caution

- To prevent overheating or damaging the motor, do not apply power braking to the loads that require frequent deceleration.
- Stall prevention and power braking only operate during deceleration, and power braking takes priority over stall prevention. In other words, when both bit 3 of PRT-50 (stall prevention and flux braking) and ADV-08 (braking options) are set, power braking will take precedence and operate.
- Note that if deceleration time is too short or inertia of the load is too great, an overvoltage fault trip may occur.
- Note that if a free run stop is used, the actual deceleration time can be longer than the pre-set deceleration time.

www.nicsanat.com
021-87700210
NIC SANAT
نیک صنعت

4.18 Frequency Limit

Operation frequency can be limited by setting maximum frequency, start frequency, upper limit frequency, and lower limit frequency.

4.18.1 Frequency Limit Using Maximum Frequency and Start Frequency

Group	Code	Name	LCD Display	Parameter Setting	Setting Range	Unit
DRV	19	Start frequency	Start Freq	0.50	0.01–10.00	Hz
	20	Maximum frequency	Max Freq	60.00	40.00–400.00	Hz

Frequency Limit Using Maximum Frequency and Start Frequency - Setting Details

Code	Description
DRV-19 Start Freq	Set the lower limit value for speed unit parameters that are expressed in Hz or rpm. If an input frequency is lower than the start frequency, the parameter value will be 0.00.
DRV-20 Max Freq	Set upper and lower frequency limits. All frequency selections are restricted to frequencies from within the upper and lower limits. This restriction also applies when you in input a frequency reference using the keypad. If you use a high speed motor over 60Hz, there will be individual response due to the difference in characteristics. Please contact LSIS.

4.18.2 Frequency Limit Using Upper and Lower Limit Frequency Values

Group	Code	Name	LCD Display	Parameter Setting		Setting Range	Unit
ADV	24	Frequency limit	Freq Limit	0	No	0–1	-
	25	Frequency lower limit value	Freq Limit Lo	0.50		0.0–maximum frequency	Hz
	26	Frequency upper limit value	Freq Limit Hi	Maximum frequency		minimum–maximum	Hz

					frequency	

www.nicsanat.com
021-87700210
NIC SANAT
نیک صنعت

Frequency Limit Using Upper and Lower Limit Frequencies - Setting Details

Code	Description
ADV-24 Freq Limit	The initial setting is '0 (No)'. Changing the setting to '1 (Yes)' allows the setting of frequencies between the lower limit frequency (ADV-25) and the upper limit frequency (ADV-26).
ADV-25 Freq Limit Lo ADV-26 Freq Limit Hi	Set an upper limit frequency to all speed unit parameters that are expressed in Hz or rpm, except for the base frequency (DRV-18). Frequency cannot be set higher.

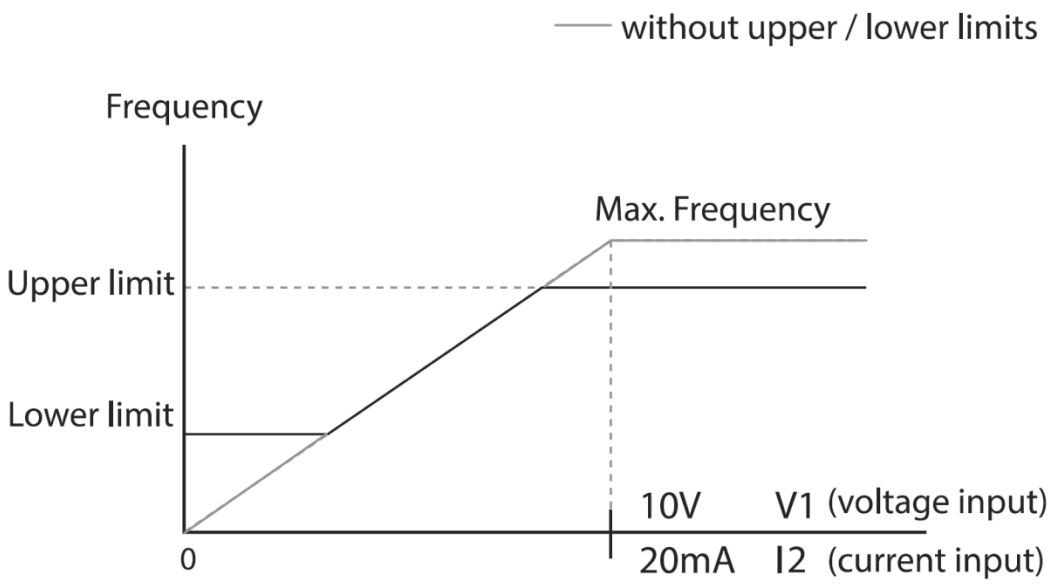

Caution

- When ADV-24 (Freq Limit) is set to 'Yes,' the frequency set at ADV-25 (Freq Limit Lo) is the minimum frequency (Low Freq). If ADV-24 (Freq Limit) is set to 'No,' the frequency set at DRV-19 (Start Freq) becomes the minimum frequency.
- When ADV-24 (Freq Limit) is set to 'Yes,' the frequency set at ADV-26 (Freq Limit Hi) is the maximum frequency (High Freq). If ADV-24 (Freq Limit) is set to 'No,' the frequency set at DRV-20 (Max Freq) becomes the maximum frequency.

4.18.3 Frequency Jump

Use frequency jump to avoid mechanical resonance frequencies. The inverter will avoid identified ranges during acceleration and deceleration. Operation frequencies cannot be set within the pre-set frequency jump band.

When a frequency setting is increased, while the frequency parameter setting value (voltage, current, RS-485 communication, keypad setting, etc.) is within a jump frequency band the frequency will be maintained at the lower limit value of the frequency band. Then, the frequency will increase when the frequency parameter setting exceeds the range of frequencies used by the frequency jump band.

Group	Code	Name	LCD Display	Parameter Setting	Setting Range	Unit
ADV	27	Frequency jump	Jump Freq	0–1	0–1	-
	28	Jump frequency lower limit1	Jump Lo 1	10.00	0.00–Jump frequency upper limit 1	Hz
	29	Jump frequency upper limit1	Jump Hi 1	15.00	Jump frequency lower limit 1–Maximum frequency	Hz
	30	Jump frequency lower limit 2	Jump Lo 2	20.00	0.00–Jump frequency upper limit 2	Hz
	31	Jump frequency upper limit 2	Jump Hi 2	25.00	Jump frequency lower limit 2–Maximum frequency	Hz
	32	Jump frequency lower limit 3	Jump Lo 3	30.00	0.00–Jump frequency upper limit 3	Hz
	33	Jump frequency upper limit 3	Jump Hi 3	35.00	Jump frequency lower limit 3–Maximum	Hz

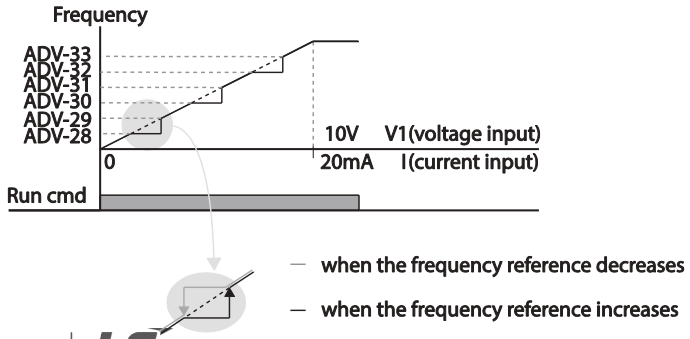

Group	Code	Name	LCD Display	Parameter Setting	Setting Range	Unit
					frequency	

4.19 2nd Operation Mode Setting

Apply two types of operation modes and switch between them as required. For both the first and second command source, set the frequency after shifting operation commands to the multi-function input terminal. Mode switching can be used to stop remote control during an operation using the communication option and to switch operation mode to operate via the local panel, or to operate the inverter from another remote control location.

Select one of the multi-function terminals from codes IN-65–71 and set the parameter value to 15 (2nd Source).

Group	Code	Name	LCD Display	Parameter Setting		Setting Range	Unit
DRV	06	Command source	Cmd Source	1	Fx/Rx-1	0–5	-
	07	Frequency reference source	Freq Ref Src	2	V1	0–11	-
BAS	04	2nd Command source	Cmd 2nd Src	0	Keypad	0–5	-
	05	2nd Frequency reference source	Freq 2nd Src	0	KeyPad-1	0–11	-
IN	65–71	Px terminal configuration	Px Define (Px: P1–P7)	17	2nd Source	0–55	-

2nd Operation Mode Setting Details

Code	Description
BAS-04 Cmd 2nd Src BAS-05 Freq 2nd Src	If signals are provided to the multi-function terminal set as the 2nd command source (2nd Source), the operation can be performed using the set values from BAS-04-05 instead of the set values from the DRV-7 and DRV-01. The 2nd command source settings cannot be changed while operating with the 1st command source (Main Source).

Caution

- When setting the multi-function terminal to the 2nd command source (2nd Source) and input (On) the signal, operation state is changed because the frequency setting and the Operation command will be changed to the 2nd command. Before shifting input to the multi-function terminal, ensure that the 2nd command is correctly set. Note that if the deceleration time is too short or inertia of the load is too high, an overvoltage fault trip may occur.
- Depending on the parameter settings, the inverter may stop operating when you switch the command modes.

4.20 Multi-function Input Terminal Control

Filter time constants and the type of multi-function input terminals can be configured to improve the response of input terminals.

Group	Code	Name	LCD Display	Parameter Setting	Setting Range	Unit
IN	85	Multi-function input terminal On filter	DI On Delay	10	0–10000	msec
	86	Multi-function input terminal Off filter	DI Off Delay	3	0–10000	msec
	87	Multi-function input terminal selection	DI NC/NO Sel	000 0000*	-	-
	90	Multi-function input terminal status	DI Status	000 0000*	-	-

* From the last bit to the first, the bits are for multi-purpose input 1–7 (the last bit is for input 1, and the first bit for input 7).

www.nicsanat.com
021-87700210
NIC SANAT
نیک صنعت

Multi-function Input Terminal Control Setting Details

IN-85 DI On Delay, IN-86 DI Off Delay	If the input terminal's state is not changed during the set time, when the terminal receives an input, it is recognized as On or Off.
IN-87 DI NC/NO Sel	Select terminal contact types for each input terminal. The position of the indicator light corresponds to the segment that is on as shown in the table below. With the bottom segment on, it indicates that the terminal is configured as a A terminal (Normally Open) contact. With the top segment on, it indicates that the terminal is configured as a B terminal (Normally Closed) contact. Terminals are numbered P1–P7, from right to left.

Type	B terminal status (Normally Closed)	A terminal status (Normally Open)
Keypad		

IN-90 DI Status	Display the configuration of each contact. When a segment is configured as A terminal, using DRV-87, the On condition is indicated by the top segment turning on. The Off condition is indicated when the bottom segment is turned on. When contacts are configured as B terminals, the segment lights behave conversely. Terminals are numbered P1–P7, from right to left.

Type	A terminal setting (On)	A terminal setting (Off)
Keypad		

www.nicsanat.com
021-87700210
NIC SANAT
نیک صنعت

4.21 Multi-function Input Terminal On/Off Delay Control

Availability of using On/Off Delay about Multi-function Input Terminal can be set

IN	83	Availability of applying DI On Delay.	DI On DelayEn	111 1111	000 0000 ~ 111 1111	-
	84	Availability of applying DI Off Delay.	DI Off DelayEn	111 1111	000 0000 ~ 111 1111	-

Multi-function Input Terminal On/Off Delay Control Setting Details

IN-83 DI On Delay En IN-84 DI Off Delay En	Every Input Terminal, it is possible to set availability of using On/Off Delay of Input Terminal. From right, Availability of using On/Off Delay about Multi-function Input Terminal can be set with a sequence such as P1~P7. 1: Activate D1 On/Off Delay 0: Inactivate D1 On/Off Delay

www.nicsanat.com
021-87700210
NIC SANAT
نیک صنعت

5 Learning Advanced Features

This chapter describes the advanced features of the H100 inverter. Check the reference page in the table to see the detailed description for each of the advanced features.

Advanced Tasks	Description	Ref.
Auxiliary frequency operation	Use the main and auxiliary frequencies in the predefined formulas to create various operating conditions. Auxiliary frequency operation is ideal for Draw Operation* as this feature enables fine-tuning of operation speeds.	p.147
Jog operation	Jog operation is a kind of a manual operation. The inverter operates to a set of parameter settings predefined for Jog operation while the Jog command button is pressed.	p.153
Up-down operation	Uses the upper and lower limit value switch output signals (i.e. signals from a flow meter) as Acc/Dec commands to motors.	p.155
3-wire operation	3-wire operation is used to latch an input signal. This configuration is used to operate the inverter by a push button.	p.157
Safety operation mode	This safety feature allows the inverter's operation only after a signal is input to the multi-function terminal designated for the safety operation mode. This feature is useful when extra care is needed in operating the inverter using the multi-purpose terminals.	p.158
Dwell operation	Use this feature for the lift-type loads such as elevators, when the torque needs to be maintained while the brakes are applied or released.	p.160
Slip compensation	This feature ensures that the motor rotates at a constant speed, by compensating for the motor slip as a load increases.	p.162
PID control	PID control provides constant automated control of flow, pressure, and temperature by adjusting the output frequency of the inverter.	p.163
Sleep-wakeup operation	When the inverter operation continues below the PID conditions for a set time period, the PID reference is automatically raised to extend the operation standby time. This keeps the inverter in a standby (sleep) mode when the demand is very low.	p.180
Auto-tuning	Used to automatically measure the motor control parameters to optimize the inverter's control mode performance.	p.219
Energy buffering operation	Used to maintain the DC link voltage for as long as possible by controlling the inverter output frequency during power interruptions, thus to delay a low voltage fault trip.	p.197
Energy saving operation	Used to save energy by reducing the voltage supplied to motors during low-load and no-load conditions.	p.239
Speed search operation	Used to prevent fault trips when the inverter voltage is output while the motor is idling or free-running.	p.243

Advanced Tasks	Description	Ref.
Auto restart operation	Auto restart configuration is used to automatically restart the inverter when a trip condition is released, after the inverter stops operating due to activation of protective devices (fault trips).	p.248
Second motor operation	Used to switch equipment operation by connecting two motors to one inverter. Configure and operate the second motor using the terminal input defined for the second motor operation.	p.251
Commercial power source switch operation	Used to switch the power source to the motor from the inverter output to a commercial power source, or vice versa.	p.253
Cooling fan control	Used to control the cooling fan of the inverter.	p.254
Multi-function output On/Off control	Set standard values and turn On/Off the output relays or multi-function output terminals according to the analog input value.	p.294
Regeneration prevention for press operation.	Used during a press operation to avoid motor regeneration, by increasing the motor operation speed.	p.253
Damper operation	Controls the fan motor optimally when a damper is used in the system.	p.194
Lubrication operation	Supplies lubricant to the machinery before starting the inverter and the mechanical system connected to it.	p.196
Flow compensation	Compensates for pressure loss in a system with long pipelines.	p.194
Energy savings display	Displays the amount of energy saved by the use of the inverter, compared to when a commercial power source is used without an inverter.	p.198
Pump clean operation	Cleans the pumps by removing the scales or deposits that are attached to the impeller.	p.200
Inclination setting for operation and stop	Sets the initial operating conditions for a pump by adjusting the acceleration and deceleration times.	p.204
Valve deceleration time setting	Prevents possible pump damage that may be caused by abrupt deceleration.	p.206
Load tuning	Creates load-specific curves for light load operations and the pump clean operation.	p.207
Level detection	Detects and displays the level set by the user.	p.209
Pipe breakage detection	Detects breakages in the pipeline during a PID operation.	p.213
Motor preheating	Prevents motors and pumps from freezing when they are not operated.	p.216
Scheduled operation	Uses the built-in real-time clock (RTC) to operate the inverter according to the desired time schedule.	p.222

Fire mode operation	Operates the inverter in a way to cope with emergency situations, such as fire, by controlling the operation of ventilation (intake and exhaust) fans.	p.240

5.1 Operating with Auxiliary References

Frequency references can be configured with various calculated conditions that use the main and auxiliary frequency references simultaneously. The main frequency reference is used as the operating frequency, while auxiliary references are used to modify and fine-tune the main reference.

DRV	06	Frequency reference source	Freq Ref Src	0	Keypad-1	0–11	-
BAS	01	Auxiliary frequency reference source	Aux Ref Src	1	V1	0–13	-
	02	Auxiliary frequency reference calculation type	Aux Calc Type	0	M+(G*A)	0–7	-
	03	Auxiliary frequency reference gain	Aux Ref Gain	100.0	100.0	-200.0–200.0	%
IN	65–71	Px terminal configuration	Px Define	36	dis Aux Ref	0–55	-

The table above lists the available calculated conditions for the main and auxiliary frequency references. Refer to the table to see how the calculations apply to an example where the DRV-06 Frq Src code has been set to '0 (Keypad-1)', and the inverter is operating at a main reference frequency of 30.00 Hz. Signals at -10 to +10 V are received at terminal V1, with the reference gain set at 5%. In this example, the resulting frequency reference is fine-tuned within the range of 27.00–33.00 Hz [Codes IN-01–16 must be set to the default values, and IN-06 (V1 Polarity), set to '1 (Bipolar)'].

www.nicsanat.com
021-87700210
NIC SANAT
نیک صنعت

Auxiliary Reference Setting Details

<table>
<tr><th>Code</th><th>Description</th></tr>
<tr><td>BAS-01 Aux Ref Src</td><td>Set the input type to be used for the auxiliary frequency reference.
<table>
<tr><th colspan="2">Configuration</th><th>Description</th></tr>
<tr><td>0</td><td>None</td><td>Auxiliary frequency reference is disabled</td></tr>
<tr><td>1</td><td>V1</td><td>Sets the V1 (voltage) terminal at the control terminal block as the source of auxiliary frequency reference.</td></tr>
<tr><td>3</td><td>V2</td><td>Sets the I2 (voltage) terminal at the control terminal block as the source of auxiliary frequency reference (SW4 must be set to 'voltage').</td></tr>
<tr><td>4</td><td>I2</td><td>Sets the I2 (current) terminal at the control terminal block as the source of auxiliary frequency reference (SW4 must be set to 'current').</td></tr>
<tr><td>5</td><td>Pulse</td><td>Sets the TI (pulse) terminal at the control terminal block as the source of auxiliary frequency reference.</td></tr>
</table></td></tr>
<tr><td>BAS-02
Aux Calc Type</td><td>Set the auxiliary reference gain with BAS-03 (Aux Ref Gain) to configure the auxiliary reference and set the percentage to be reflected when calculating the main reference. Note that items 4–7 below may result in either plus (+) or minus (-) references (forward or reverse operation) even when unipolar analog inputs are used.
<table>
<tr><th colspan="2">Configuration</th><th>Formula for frequency reference</th></tr>
<tr><td>0</td><td>M+(G*A)</td><td>Main reference +(BAS-03x BAS-01xIN-01)</td></tr>
<tr><td>1</td><td>M*(G*A)</td><td>Main reference x(BAS-03x BAS-01)</td></tr>
<tr><td>2</td><td>M/(G*A)</td><td>Main reference /(BAS-03x BAS-01)</td></tr>
<tr><td>3</td><td>M+{M*(G*A)}</td><td>Main reference +{ Main reference x(BAS-03x BAS-01)}</td></tr>
<tr><td>4</td><td>M+G*2*(A-50)</td><td>Main reference + BAS-03x2x(BAS-01–50)xIN-01</td></tr>
<tr><td>5</td><td>M*{G*2*(A-50)}</td><td>Main reference x{ BAS-03x2x(BAS-01–50)}</td></tr>
<tr><td>6</td><td>M/{G*2*(A-50)}</td><td>Main reference /{ BAS-03x2x(BAS-01–50)}</td></tr>
</table></td></tr>
</table>

	7 | M+M*G*2*(A-50) | Main reference + Main reference x BAS-03x2x(BAS-01–50) M: Main frequency reference (Hz or rpm) G: Auxiliary reference gain (%) A: Auxiliary frequency reference (Hz or rpm) or gain (%)
BAS-03 Aux Ref Gain	Adjust the size of the input (BAS-01 Aux Ref Src) configured for auxiliary frequency.
IN-65–71 Px Define	Set one of the multi-function input terminals to 36 (dis Aux Ref) and turn it on to disable the auxiliary frequency reference. The inverter will operate using the main frequency reference only.

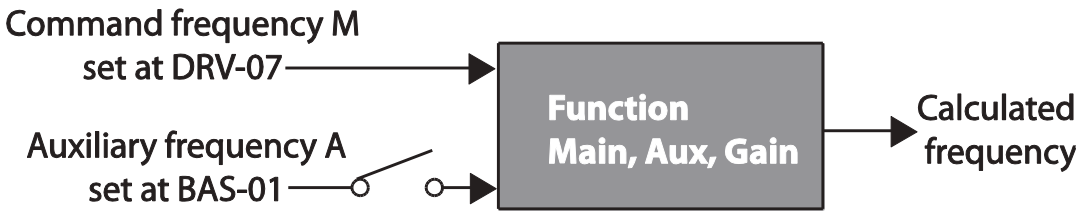

www.nicsanat.com
021-87700210
NIC SANAT
نیک صنعت

Keypad Frequency Setting is Main Frequency and V1 Analog Voltage is Auxiliary Frequency

- Main frequency: Keypad (operation frequency 30 Hz)
- Maximum frequency setting (DRV-20): 400 Hz
- Auxiliary frequency setting (BAS-01): V1[Display by percentage(%) or auxiliary frequency (Hz) depending on the operation setting condition]
- Auxiliary reference gain setting (BAS-03): 50%
- IN-01–32: Factory default

Example: an input voltage of 6 V is supplied to V1, and the frequency corresponding to 10 V is 60 Hz. The table below shows the auxiliary frequency A as 36 Hz[=60 Hz X (6 V/10 V)] or 60%[= 100% X (6 V/10 V)].

Setting *		Calculating final command frequency**
0	M[Hz]+(G[%]*A[Hz])	30 Hz(M)+(50%(G)x36 Hz(A))=48 Hz
1	M[Hz]*(G[%]*A[%])	30 Hz(M)x(50%(G)x60%(A))=9 Hz
2	M[Hz]/(G[%]*A[%])	30 Hz(M)/(50%(G)x60%(A))=100 Hz
3	M[Hz]+{M[Hz]*(G[%]*A[%])}	30 Hz(M)+{30[Hz]x(50%(G)x60%(A))}=39 Hz
4	M[Hz]+G[%]*2*(A[%]-50[%])[Hz]	30 Hz(M)+50%(G)x2x(60%(A)–50%)x60 Hz=36 Hz
5	M[HZ]*{G[%]*2*(A[%]-50[%])}	30 Hz(M)x{50%(G)x2x(60%(A)–50%)}=3 Hz
6	M[HZ]/{G[%]*2*(A[%]-50[%])}	30 Hz(M)/{50%(G)x2x(60%–50%)}=300 Hz
7	M[HZ]+M[HZ]*G[%]*2*(A[%]-50[%])	30 Hz(M)+30 Hz(M)x50%(G)x2x(60%(A)–50%)=33 Hz

* M: main frequency reference (Hz or rpm)/G: auxiliary reference gain (%)/A: auxiliary frequency reference (Hz or rpm) or gain (%).

**If the frequency setting is changed to rpm, it is converted to rpm instead of Hz.

www.nicsanat.com
021-87700210
NIC SANAT
نیک صنعت

Keypad Frequency Setting is Main Frequency and I2 Analog Voltage is Auxiliary Frequency

- Main frequency: Keypad (Operation frequency 30 Hz)
- Maximum frequency setting (BAS-20): 400 Hz
- Auxiliary frequency setting (BAS-01): I2 [Display by percentage (%) or auxiliary frequency (Hz) depending on the operation setting condition]
- Auxiliary reference gain setting (BAS-03): 50%
- IN-01–32: Factory default

Example: an input current of 10.4 mA is applied to I2, with the frequency corresponding to 20 mA of 60 Hz. The table below shows auxiliary frequency as 24 Hz(=60[Hz] X {(10.4[mA]-4[mA])/(20[mA] - 4[mA])} or 40%(=100[%] X {(10.4[mA] - 4[mA])/(20[mA] - 4[mA])}.

Setting*		Calculating final command frequency**
0	M[Hz]+(G[%]*A[Hz])	30Hz(M)+(50%(G)x24Hz(A))=42Hz
1	M[Hz]*(G[%]*A[%])	30Hz(M)x(50%(G)x40%(A))=6Hz
2	M[Hz]/(G[%]*A[%])	30Hz(M)/(50%(G)x40%(A))=150Hz
3	M[Hz]+{M[Hz]*(G[%]*A[%])}	30Hz(M)+{30[Hz]x(50%(G)x40%(A))}=36Hz
4	M[Hz]+G[%]*2*(A[%]-50[%])[Hz]	30Hz(M)+50%(G)x2x(40%(A)–50%)x60Hz=24Hz
5	M[HZ]*{G[%]*2*(A[%]-50[%])	30Hz(M)x{50%(G)x2x(40%(A)–50%)} = -3Hz(Reverse)
6	M[HZ]/{G[%]*2*(A[%]-50[%])}	30Hz(M)/{50%(G)x2x(60%–40%)} = -300Hz(Reverse)
7	M[HZ]+M[HZ]*G[%]*2*(A[%]-50[%])	30Hz(M)+30Hz(M)x50%(G)x2x (40%(A)–50%)=27Hz

* M: main frequency reference (Hz or rpm)/G: auxiliary reference gain (%)/A: auxiliary frequency reference Hz or rpm) or gain (%).

**If the frequency setting is changed to rpm, it is converted to rpm instead of Hz.

www.nicsanat.com
021-87700210
NIC SANAT
نیک صنعت

V1 is Main Frequency and I2 is Auxiliary Frequency

- Main frequency: V1 (frequency command setting to 5 V and is set to 30 Hz)
- Maximum frequency setting (DRV-20): 400 Hz
- Auxiliary frequency (BAS-01): I2[Display by percentage (%) or auxiliary frequency (Hz) depending on the operation setting condition]
- Auxiliary reference gain (BAS-03): 50%
- IN-01–32: Factory default

Example: An input current of 10.4 mA is applied to I2, with the frequency corresponding to 20 mA of 60 Hz. The table below shows auxiliary frequency Aas 24 Hz (=60[Hz]x{(10.4[mA]-4[mA])/(20[mA]-4[mA])} or 40% (=100[%] x {(10.4[mA] - 4[mA]) /(20 [mA] - 4[mA])}.

Setting*		Calculating final command frequency**
0	M[Hz]+(G[%]*A[Hz])	30 Hz(M)+(50%(G)x24 Hz(A))=42 Hz
1	M[Hz]*(G[%]*A[%])	30 Hz(M)x(50%(G)x40%(A))=6 Hz
2	M[Hz]/(G[%]*A[%])	30 Hz(M)/(50%(G)x40%(A))=150 Hz
3	M[Hz]+{M[Hz]*(G[%]*A[%])}	30 Hz(M)+{30[Hz]x(50%(G)x40%(A))}=36 Hz
4	M[Hz]+G[%]*2*(A[%]-50[%])[Hz]	30 Hz(M)+50%(G)x2x(40%(A)–50%)x60 Hz=24 Hz
5	M[HZ]*{G[%]*2*(A[%]-50[%])}	30 Hz(M)x{50%(G)x2x(40%(A)–50%)}=-3 Hz(Reverse)
6	M[HZ]/{G[%]*2*(A[%]-50[%])}	30 Hz(M)/{50%(G)x2x(60%–40%)}=-300 Hz(Reverse)
7	M[HZ]+M[HZ]*G[%]*2*(A[%]-50[%])	30 Hz(M)+30 Hz(M)x50%(G)x2x(40%(A)–50%)=27 Hz

* M: main frequency reference (Hz or rpm)/G: auxiliary reference gain (%)/A: auxiliary frequency reference (Hz or rpm) or gain (%).

**If the frequency setting is changed to rpm, it is converted to rpm instead of Hz.

Note

When the maximum frequency value is high, output frequency deviation may result due to analog input variation and deviations in the calculations.

www.nicsanat.com
021-87700210
NIC SANAT
نیک صنعت

5.2 Jog Operation

The jog operation allows for a temporary control of the inverter. You can enter a jog operation command using the multi-function terminals or by using the [ESC] key on the keypad.

The jog operation is the second highest priority operation, after the dwell operation. If a jog operation is requested while operating the multi-step, up-down, or 3-wire operation modes, the jog operation overrides all other operation modes.

5.2.1 Jog Operation 1-Forward Jog by Multi-function Terminal

The jog operation is available in either forward or reverse direction, using the keypad or multi-function terminal inputs. The table below lists parameter setting for a forward jog operation using the multi-function terminal inputs.

Group	Code	LCD Display	LCD Display	Parameter Setting		Setting Range	Unit
DRV	11	Jog frequency	JOG Frequency	10.00		0.00, Low Freq–High Freq	Hz
	12	Jog operation acceleration time	JOG Acc Time	20.00		0.00–600.00	sec
	13	Jog operation deceleration time	JOG Dec Time	30.00		0.00–600.00	sec
IN	65–71	Px terminal configuration	Px Define (Px: P1–P7)	6	JOG	0-55	-

Forward Jog Description Details

Code	Description
IN-65–71 Px Define	Select the jog frequency from P1- P7 and then select 6. Jog from IN-65-71. 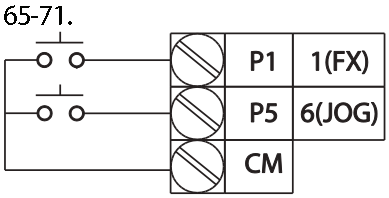 [Terminal settings for jog operation]

Code	Description
DRV-11 JOG Frequency	Set the operation frequency.
DRV-12 JOG Acc Time	Set the acceleration speed.
DRV-13 JOG Dec Time	Set the deceleration speed.

If a signal is entered at the jog terminal while an FX operation command is on, the operation frequency changes to the jog frequency and the jog operation begins.

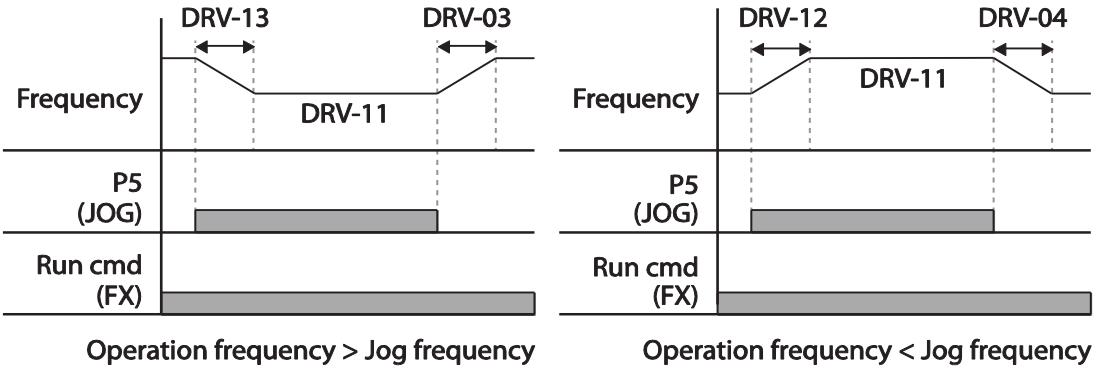

5.2.2 Jog Operation 2-Forward/Reverse Jog by Multi-function Terminal

For jog operation 1, an operation command must be entered to start operation, but while using jog operation 2, a terminal that is set for a forward or reverse jog also starts an operation. The priorities for frequency, Acc/Dec time and terminal block input during operation in relation to other operating modes (Dwell, 3-wire, up/down, etc.) are identical to jog operation 1. If a different operation command is entered during a jog operation, it is ignored and the operation maintains the jog frequency.

Group	Code	Name	LCD Display	Parameter setting	Setting Range	Unit
DRV	11	Jog frequency	JOG Frequency	10.00	0.00, Low Freq–High Freq	Hz
	12	Jog operation acceleration time	JOG Acc Time	20.00	0.00–600.00	sec
	13	Operation deceleration time	JOG Dec Time	30.00	0.00–600.00	sec

IN	65–71	Px terminal configuration	Px Define (Px: P1–P7)	38	FWD JOG	0-55	-
				39	REV JOG		

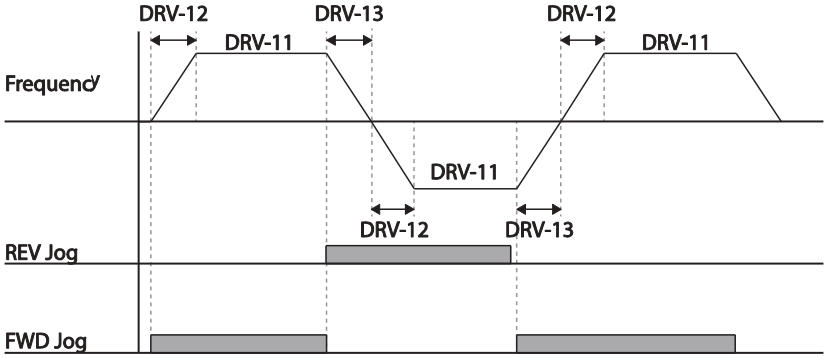

5.3 Up-down Operation

The Acc/Dec time can be controlled through input at the multi-function terminal block. Similar to a flowmeter, the up-down operation can be applied easily to a system that uses the upper-lower limit switch signals for Acc/Dec commands.

ADV	65	Up-down operation frequency save	U/D Save Mode	1	Yes	0–1	-
IN	65–71	Px terminal configuration	Px Define(Px: P1–P7)	19	Up	0–55	-
				20	Down		
				22	U/D Clear		

www.nicsanat.com
021-87700210
NIC SANAT
نیک صنعت

Up-down Operation Setting Details

Code	Description
IN-65–71 Px Define	Select two terminals for up-down operation and set them to '19 (Up)' and '20 (Down)', respectively. With the operation command input, acceleration begins when the Up terminal signal is on. Acceleration stops and constant speed operation begins when the signal is off. During operation, deceleration begins when the Down signal is on. Deceleration stops and constant speed operation begins when both Up and Down signals are entered at the same time. 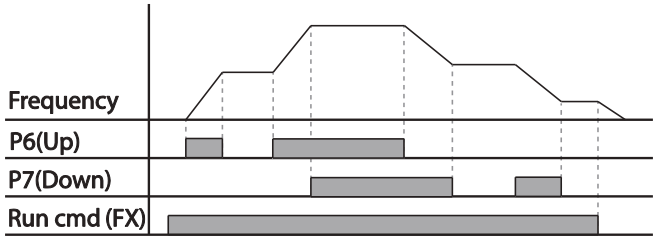
ADV-65 U/D Save Mode	During a constant speed operation, the operating frequency is saved automatically in the following conditions: the operation command (Fx or Rx) is off, a fault trip occurs, or the power is off. When the operation command is turned on again, or when the inverter regains the power source or resumes to a normal operation from a fault trip, it resumes operation at the saved frequency. To delete the saved frequency, use the multi-function terminal block. Set one of the multi-function terminals to 22 (U/D Clear) and apply signals to it during constant speed operation. The saved frequency and the up-down operation configuration will be deleted. 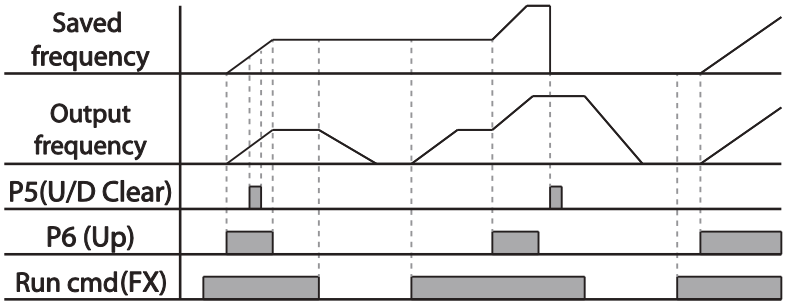

5.4 3- Wire Operation

The 3-wire operation latches the signal input (the signal stays on after the button is released), and is used when operating the inverter with a push button.

DRV	07	Command source	Cmd Source*	1	Fx/Rx - 1	0-11	-
IN	65–71	Px terminal configuration	Px Define(Px: P1–P7)	16	3-Wire	0-55	-

To enable the 3-wire operation, the following circuit sequence is necessary. The minimum input time (t) for 3-wire operation is 2 ms, and the operation stops when both forward and reverse operation commands are entered at the same time.

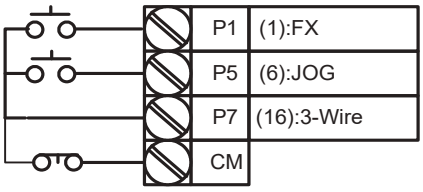

[Terminal connections for 3-wire operation]

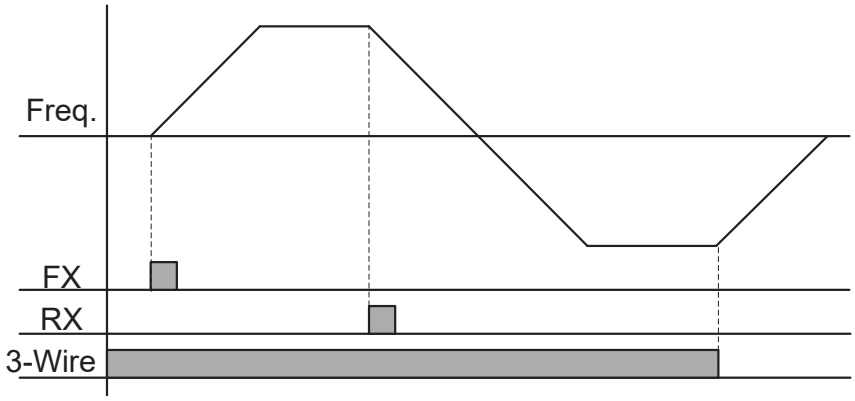

[3- wire operation]

www.nicsanat.com
021-87700210
NIC SANAT
نیک صنعت

5.5 Safe Operation Mode

When the multi-function terminals are configured to operate in safe mode, operation commands can be entered in the Safe operation mode only. Safe operation mode is used to safely and carefully control the inverter through the multi-function terminals.

Group	Code	Name	LCD Display	Parameter Setting		Setting Range	Unit
ADV	70	Safe operation selection	Run En Mode	1	DI Dependent	0-1	-
	71	Safe operation stop mode	Run Dis Stop	0	Free-Run	0–2	-
	72	Safe operation deceleration time	Q-Stop Time	5.0		0.0–600.0	sec
IN	65–71	Px terminal configuration	Px Define(Px: P1–P7)	15	RUN Enable	0-55	-

Safe Operation Mode Setting Details

<table>
<tr><th>Code</th><th>Description</th></tr>
<tr><td>IN-65–71 Px Define</td><td>From the multi-function terminals, select a terminal to operate in safe operation mode and set it to '15 (RUN Enable)'.</td></tr>
<tr><td>ADV-70 Run En Mode</td><td><table><tr><th colspan="2">Setting</th><th>Function</th></tr><tr><td>0</td><td>Always Enable</td><td>Enables safe operation mode</td></tr><tr><td>1</td><td>DI Dependent</td><td>Recognizes the operation command from a multi-function input terminal.</td></tr></table></td></tr>
<tr><td>ADV-71 Run Dis Stop</td><td>Set the operation of the inverter when the multi-function input terminal in safe operation mode is off.
When the safety operation mode terminal signal is given, the inverter decelerates based on the settings at the Q-Stop time. The inverter decelerates and stops based on the deceleration time (Dec Time) settings if the run command is off.<table><tr><th colspan="2">Setting</th><th>Function</th></tr><tr><td>1</td><td>Free-Run</td><td>Blocks the inverter output when the multi-function terminal is off.</td></tr><tr><td>2</td><td>Q-Stop</td><td>The deceleration time (Q-Stop Time) used in safe</td></tr></table></td></tr>
</table>

			operation mode. It stops after deceleration and then the operation can resume only when the operation command is entered again. The operation will not begin if only the multi-function terminal is on.
	3	Q-Stop Resume	The inverter decelerates to the deceleration time (Q-Stop Time) in safe operation mode. It stops after deceleration. Then if the multi-function terminal is on, the operation resumes as soon as the operation command is entered again.
ADV-72 Q-Stop Time	Sets the deceleration time when ADV-71 Run Dis Stop is set to '1 (Q-Stop)' or '2 (Q-Stop Resume)'.		

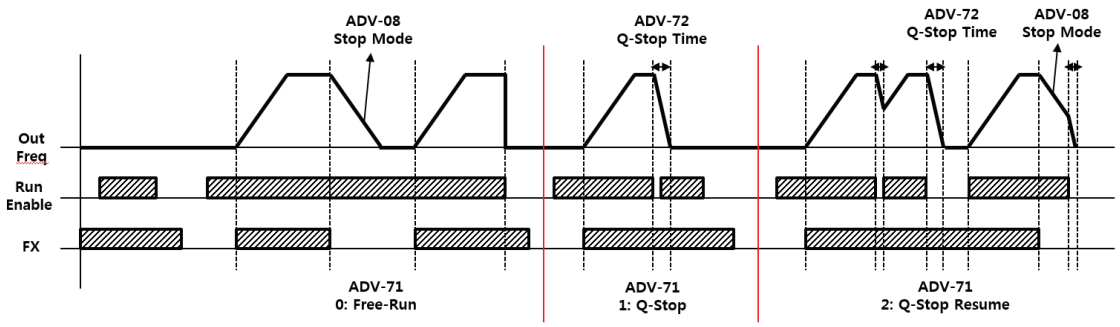

www.nicsanat.com
021-87700210
NIC SANAT
نیک صنعت

5.6 Dwell Operation

The dwell operation is used to maintain torque during the application and release of the mechanical brakes on lift-type loads. Inverter dwell operation is based on the Acc/Dec dwell frequency and the dwell time set by the user. The following points also affect dwell operation.

- **Acceleration Dwell Operation**: When an operation command runs, acceleration continues until the acceleration dwell frequency and constant speed is reached within the acceleration dwell operation time (Acc Dwell Time). After the Acc Dwell Time has passed, acceleration is carried out based on the acceleration time and the operation speed that was originally set.
- **Deceleration Dwell Operation**: When a stop command is run, deceleration continues until the deceleration dwell frequency and constant speed are reached within the deceleration dwell operation time (Dec Dwell Freq). After the set time has passed, deceleration is carried out based on the deceleration time that was originally set, then the operation stops.

Group	Code	Name	LCD Display	Parameter Setting	Setting Range	Unit
ADV	20	Dwell frequency during acceleration	Acc Dwell Freq	5.00	Start frequency – Maximum frequency	Hz
	21	Operation time during acceleration	Acc Dwell Time	0.0	0.0–10.0	sec
	22	Dwell frequency during deceleration	Dec Dwell Freq	5.00	Start frequency – Maximum frequency	Hz
	23	Operation time during deceleration	Dec Dwell Time	0.0	0 .0– 60.0	sec

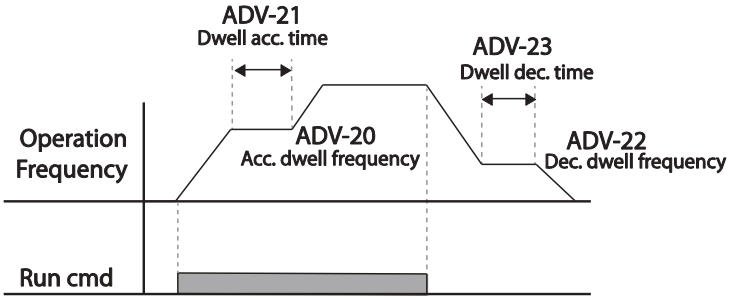

Note

Dwell operation does not work when:

- Dwell operation time is set to 0 sec or dwell frequency is set to 0 Hz.

- Re-acceleration is attempted from stop or during deceleration, as only the first acceleration dwell operation command is valid.

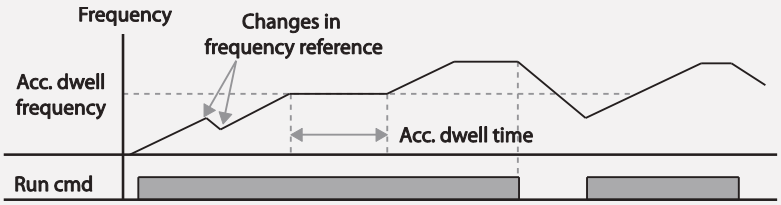

[Acceleration dwell operation]

- Although deceleration dwell operation is carried out whenever stop commands are entered and the deceleration dwell frequency is passed through, it does not work during a deceleration by simple frequency change (which is not a deceleration due to a stop operation), or during external brake control applications.

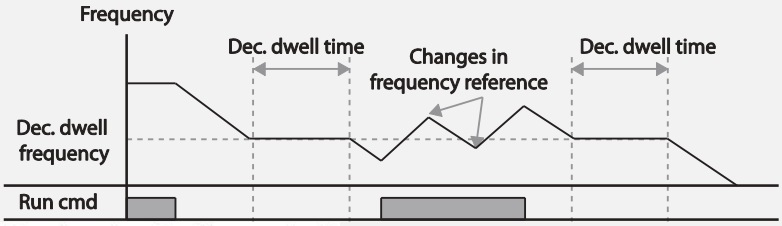

[Deceleration dwell operation]

www.nicsanat.com
021-87700210
NIC SANAT
نیک صنعت

5.7 Slip Compensation Operation

Slip refers to the variation between the setting frequency (synchronous speed) and motor rotation speed. As the load increases there can be variations between the setting frequency and motor rotation speed. Slip compensation is used for loads that require compensation of these speed variations.

Group	Code	Name	LCD Display	Parameter Setting		Setting Range	Unit
DRV	09	Control Mode	Control Mode	1	Slip Compen	-	-
	14	Motor Capacity	Motor Capacity	2	5.5 kW	0–20	-
BAS	11	Number of motor poles	Pole Number	4		2–48	-
	12	Rated slip speed	Rated Slip	40 (5.5 kW based)		0–3000	Rpm
	13	Rated motor current	Rated Curr	3.6 (5.5 kW based)		1.0–1000.0	A
	14	Motor no-load current	Noload Curr	1.6 (5.5 kW based)		0.5–1000.0	A
	16	Motor efficiency	Efficiency	72 (5.5 kW based)		70–100	%

Slip Compensation Operation Setting Details

Code	Description
DRV-09 Control Mode	Set DRV-09 to '2 (Slip Compen)' to carry out the slip compensation operation.
DRV-14 Motor Capacity	Set the capacity of the motor connected to the inverter.
BAS-11 Pole Number	Enter the number of poles from the motor rating plate.
BAS-12 Rated Slip	Enter the number of rated rotations from the motor rating plate. $f_s = f_r - \frac{Rpm \times P}{120}$ f_s= Rated slip frequency f_r= Rated frequency Rpm= Number of the rated motor rotations

Code	Description
	P= Number of motor poles
BAS-13 Rated Curr	Enter the rated current from the motor rating plate.
BAS-14 Noload Curr	Enter the measured current when the load on the motor axis is removed and when the motor is operated at the rated frequency. If no-load current is difficult to measure, enter a current equivalent to 30-50% of the rated motor current.
BAS-16 Efficiency	Enter the efficiency from the motor rating place.

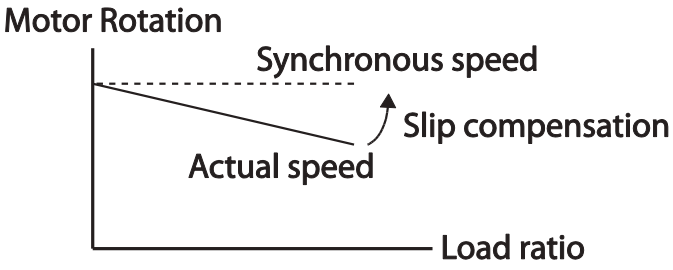

5.8 PID Control

PID control is one of the most common auto-control methods. It uses a combination of proportional, integral, and differential (PID) controls that provide more effective control for automated systems. The functions of PID control that can be applied to the inverter operation are as follows:

Purpose	Function
Speed Control	Controls speed by monitoring the current speed levels of the equipment or machinery being controlled. Control maintains consistent speed or operates at the target speed.
Pressure Control	Controls pressure by monitoring the current pressure levels of the equipment or machinery being controlled. Control maintains consistent pressure or operates at the target pressure.
Flow Control	Controls flow by monitoring the current amount of flow in the equipment or machinery being controlled. Control maintains consistent flow or operates at a target flow.

Purpose	Function
Temperature Control	Controls temperature by monitoring the current temperature levels of the equipment or machinery to be controlled. Control maintains a consistent temperature or operates at a target temperature.

5.8.1 PID Basic Operation

PID operates by controlling the output frequency of the inverter, through automated system process control to maintain speed, pressure, flow, temperature or tension.

Group	Code	Name	LCD Display	Parameter Setting		Setting Range	Unit
PID	01	PID Options	PID Sel	0	No	0–1	-
	03	PID output monitor	PID Output	-		-	-
	04	PID reference monitor	PID Ref Value	-		-	-
	05	PID feedback monitor	PID Fdb Value	-		-	-
	06	PID Error Monitor	PID Err Value				
	10	PID reference source	PID Ref1 Source	0	Keypad	0–11	-
	11	PID reference setting	PID Ref Set	Unit Default		Unit Min–Unit Max	Unit
	12	PID reference 1 auxiliary source selection	PID Ref1AuxSrc	0	None	0–13	-
	13	PID reference 1 auxiliary mode selection	PID Ref1AuxMod	0	M+(G*A)	0–13	-
	14	PID reference auxiliary gain	PID Ref 1 Aux G	0.0		-200.0–200.0	Unit
	15	PID reference 2 auxiliary source	PID Ref 2 Src	0	Keypad	0–11	-

Group	Code	Name	LCD Display	Parameter Setting		Setting Range	Unit
		selection					
	16	PID reference 2 keypad setting	PID Ref 2 Set	Unit Default		Unit Min–Unit Max	Unit
	17	PID reference 2 auxiliary source selection	PID Ref2AuxSrc	0	None	0–13	-
	18	PID reference 2 auxiliary mode selection	PID Ref2AuxMod	0	M+(G*A)	0–12	-
	19	PID reference 2 auxiliary gain	PID Ref2 Aux G	0.0		-200.0–200.0	Unit
	20	PID feedback source selection	PID Fdb Src	0	V1	0–9	
	21	PID feedback auxiliary source selection	PID Fdb AuxSrc	0	None	0–11	
	22	PID feedback auxiliary mode selection	PID Fdb AuxMod	0	M+(G+A)	0–13	
	23	PID feedback auxiliary gain	PID Fdb Aux G	0.0		-200.0–200.0	Unit
	24	PID feedback band	PID Fdb Band	0		0–Unit Band	Unit
	25	PID proportional gain 1	PID P-Gain 1	50.0		0.0–300.00	Unit
	26	PID integral time 1	PID I-Time 1	10.0		0.0–200.0	sec
	27	PID differential time 1	PID D-Time 1	0.00		0–1.00	sec
	28	PID feed forward gain	PID FF-Gain	0.0		0.0–1000.0	Unit
	29	PID output filter	PID Out LPF	0.00		0–10.00	sec
	30	PID output upper limit	PID Limit Hi	100.00		PID Limit Lo–100.00	Unit

Group	Code	Name	LCD Display	Parameter Setting		Setting Range	Unit
	31	PID output lower limit	PID Limit Lo	0.00		-100.00–PID Limit Hi	Unit
	32	PID proportional gain 2	PID P-Gain 2	5.0		0.0–300.00	Unit
	33	PID integral time 2	PID I-Time 2	10.0		0.0–200.0	sec
	34	PID differential time 2	PID D-Time 2	0.00		0–1.00	sec
	35	PID output mode setting	PID Out Mode	4		PID or Main	0–4
	36	PID output reverse	PID Out Inv	0		No	0–1
	37	PID output scale	PID Out Scale	100.0		0.1–1000.0	Unit
	40	PID multi-step reference setting 1	PID Step Ref 1	Unit Default		Unit Min–Unit Max	Unit
	41	PID multi-step reference setting 2	PID Step Ref 2	Unit Default		Unit Min–Unit Max	Unit
	42	PID multi-step reference setting 3	PID Step Ref 3	Unit Default		Unit Min–Unit Max	Unit
	43	PID multi-step reference setting 4	PID Step Ref 4	Unit Default		Unit Min–Unit Max	Unit
	44	PID multi-step reference setting 5	PID Step Ref 5	Unit Default		Unit Min–Unit Max	Unit
	45	PID multi-step reference setting 6	PID Step Ref 6	Unit Default		Unit Min–Unit Max	Unit
	46	PID multi-step reference setting 7	PID Step Ref 7	Unit Default		Unit Min–Unit Max	Unit
	50	PID controller unit selection	PID Unit Sel	0	%	0–40	-
	51	PID control setting scale	PID Unit Scale	2	X 1	0–4	-
	52	PID control 0% setting figure	PID Unit 0%	0.00		Differ depending on PID-50 setting	

Group	Code	Name	LCD Display	Parameter Setting		Setting Range	Unit
	53	PID control 100% setting figure	PID Unit 100%	100.00		Differ depending on PID-50 setting	
IN	65–71	Px circuit function setting	Px Define(Px: P1–P7)	1	none	0–55	-

Note

- Normal PID output (PID OUT) is bipolar and is limited by PID-46 (PID Limit Hi) and PID-47 (PID Limit Lo) settings. DRV-20 (MaxFreq) value equals a 100% of PID OUT.
- The following are the variables used in PID operation, and how they are calculated:
  - Unit MAX = PID Unit 100% (PID-68)
  - Unit Min = (2xPID Unit 0% (PID-67)–PID Unit 100%)
  - Unit Default = (PID Unit 100%-PID Unit 0%)/2
  - Unit Band = Unit 100%-Unit 0%
- PID control may be utilized for the following operations:
  Soft fill, auxiliary PID reference compensation, MMC, flow compensation, pipe breakage detection
- During a PID operation, the PID output becomes the frequency reference. The inverter accelerates or decelerates to the frequency reference based on the Acc/Dec times.

PID Basic Operation Setting Details

Code	Description
PID-01 PID Sel	Sets the code to '1 (Yes)' to select functions for the process PID.
PID-03 PID Output	Displays the existing output value of the PID controller. The unit, gain, and scale that were set in the PID group are applied on the display.
PID-04 PID Ref Value	Displays the existing reference value set for the PID controller. The unit, gain, and scale that were set in the PID group are applied on the display.
PID-05 PID Fdb Value	Displays the latest feedback value of the PID controller. The unit, gain, and scale that were set in the PID group are applied on the display.
PID-06 PID Err Value	Displays the differences between the existing reference and the feedback (error value). The unit, gain, and scale that were set in the PID group are applied on the display.
PID-10 PID Ref 1 Src	Selects the reference input for the PID control. If the V1 terminal is set to a PID feedback source (PID F/B Source), the V1 terminal cannot be set to the PID reference source (PID Ref Source). To set V1 as a reference source, change the

<table>
<tr><th>Code</th><th>Description</th></tr>
<tr><td></td><td>feedback source.
<table>
<tr><th colspan="2">Setting</th><th>Function</th></tr>
<tr><td>0</td><td>Keypad</td><td>Keypad</td></tr>
<tr><td>1</td><td>V1</td><td>-10-10 V input voltage terminal</td></tr>
<tr><td>3</td><td>V2</td><td rowspan="2">I2 analog input terminal
When the analog voltage/current input terminal selection switch (SW4) at the terminal block is set to I (current), input 0-20 mA current. If it is set to V (voltage), input 0–10 V.</td></tr>
<tr><td>4</td><td>I2</td></tr>
<tr><td>5</td><td>Int. 485</td><td>RS-485 input terminal</td></tr>
<tr><td>7</td><td>FieldBus</td><td>Communication command via a communication option card</td></tr>
<tr><td>8</td><td>Pulse</td><td>TI Pulse input terminal (0-32 kHz Pulse input)</td></tr>
<tr><td>9</td><td>E-PID Output</td><td>External PID output</td></tr>
<tr><td>10</td><td>V3</td><td rowspan="2">V3 analoge input terminal of Extension IO option
When the analog voltage/current input terminal selection switch (SW2) at the terminal block is set to I3(current), input 0-20 mA current. If it is set to V3 (voltage), input 0–10 V.</td></tr>
<tr><td>11</td><td>I3</td></tr>
</table></td></tr>
<tr><td>PID-11 PID Ref Set</td><td>A reference value can be entered if the PID reference type (PID-10) is set to ‘0 (Keypad)’.</td></tr>
<tr><td>PID-12 PID Ref1AuxSrc</td><td>Selects the external input source to be used as the reference for a PID control. If an external input source is selected, the reference is determined using the input value at the source (set at PID-10) and the value set at PID-13 PID Ref1AuxMod.
<table>
<tr><th colspan="2">Setting</th><th>Function</th></tr>
<tr><td>0</td><td>None</td><td>Not used</td></tr>
<tr><td>1</td><td>V1</td><td>-10-10 V input voltage terminal</td></tr>
<tr><td>3</td><td>V2</td><td rowspan="2">I2 analog input terminal
[If the analog voltage/current input terminal selection switch (SW4) at the terminal block is set to I (current), input 0-20 mA current. If it is set to V (voltage), input 0–10 V]</td></tr>
<tr><td>4</td><td>I2</td></tr>
<tr><td>6</td><td>Pulse</td><td>TI Pulse input terminal (0-32 kHz Pulse input)</td></tr>
<tr><td>7</td><td>Int. 485</td><td>RS-485 input terminal</td></tr>
<tr><td>8</td><td>FieldBus</td><td>Communication command via a communication option card</td></tr>
<tr><td>10</td><td>EPID1</td><td>External PID 1 Output</td></tr>
</table></td></tr>
</table>

<table>
<tr><th>Code</th><th>Description</th></tr>
<tr><td></td><td>
<table>
<tr><td></td><td>Output</td><td></td></tr>
<tr><td>11</td><td>EPID1 Fdb Val</td><td>External PID 1 feedback value</td></tr>
<tr><td>12</td><td>V3</td><td rowspan="2">V3 analog input terminal of Extension IO option
When the analog voltage/current input terminal selection switch (SW2) at the terminal block is set to I3 (current), input 0-20 mA current. If it is set to V3 (voltage), input 0–10 V.</td></tr>
<tr><td>13</td><td>I3</td></tr>
</table>
</td></tr>
<tr><td>PID-13 PID Ref1 AuxMod</td><td>PID-13 (PID Ref1) provides formulas to calculate the reference 1 value. If PID-12 (PID RefAuxSrc) is set to any other value than 'None,' the final reference 1 value is calculated using the input value at the source (set at PID-10) and the input value set at PID-12).
<table>
<tr><td>Setting</td><td></td></tr>
<tr><td>0</td><td>M+(G*A)</td></tr>
<tr><td>1</td><td>M*(G*A)</td></tr>
<tr><td>2</td><td>M/(G*A)</td></tr>
<tr><td>3</td><td>M+(M*(G*A))</td></tr>
<tr><td>4</td><td>M+G*2*(A-50)</td></tr>
<tr><td>5</td><td>M*(G*2*(A-50))</td></tr>
<tr><td>6</td><td>M/(G*2*(A-50))</td></tr>
<tr><td>7</td><td>M+M*G*2*(A-50)</td></tr>
<tr><td>8</td><td>(M-A)^2</td></tr>
<tr><td>9</td><td>M^2+A^2</td></tr>
<tr><td>10</td><td>MAX(M,A)</td></tr>
<tr><td>11</td><td>MIN(M,A)</td></tr>
<tr><td>12</td><td>(M+A)/2</td></tr>
<tr><td>13</td><td>Square Root(M+A)</td></tr>
</table>
M= Value by the source set at PID-10
G= Gain value set at PID-14
A= Value input by the source set at PID-12</td></tr>
<tr><td>PID-14 PID Ref1 Aux G</td><td>Gain value for the formulas provided by PID-13.</td></tr>
<tr><td>PID-20 PID Fdb Src</td><td>Selects feedback input for PID control. If the V1 terminal is set as the PID feedback source (PID F/B Source), the V1 terminal cannot be set as the PID reference source (PID Ref Source). To set V1 as a feedback source, change the reference source.
<table>
<tr><td>Setting</td><td></td><td>Function</td></tr>
<tr><td>0</td><td>V1</td><td>-10-10 V input voltage terminal</td></tr>
<tr><td>2</td><td>V2</td><td>I2 analog input terminal</td></tr>
</table></td></tr>
</table>

<table>
<tr><th>Code</th><th>Description</th></tr>
<tr><td></td><td>
<table>
<tr><td>3</td><td>I2</td><td>[If the analog voltage/current input terminal selection switch (SW4) at the terminal block is set to I (current), input 0-20 mA current. If it is set to V (voltage), input 0–10 V]</td></tr>
<tr><td>4</td><td>Int. 485</td><td>RS-485 input terminal</td></tr>
<tr><td>5</td><td>FieldBus</td><td>Communication command via a communication option card</td></tr>
<tr><td>7</td><td>Pulse</td><td>TI Pulse input terminal (0-32 kHz Pulse input)</td></tr>
<tr><td>8</td><td>EPID1 Output</td><td>External PID 1 output</td></tr>
<tr><td>9</td><td>EPID1 Fdb Val</td><td>External PID 1 feedback</td></tr>
</table>
</td></tr>
<tr><td>PID-21 PID Fdb AuxSrc</td><td>Selects the external input source to be used as the reference for a PID control. When the external input source is selected, the reference is determined using the input value at the source (set at PID-10) and the value set at PID-13 PID Ref1AuxMod.
<table>
<tr><td>Setting</td><td></td><td>Function</td></tr>
<tr><td>0</td><td>None</td><td>Not used</td></tr>
<tr><td>1</td><td>V1</td><td>-10-10 V input voltage terminal</td></tr>
<tr><td>3</td><td>V2</td><td rowspan="2">I2 analog input terminal
[When the analog voltage/current input terminal selection switch (SW4) at the terminal block is set to I (current), input 0-20 mA current. If it is set to V (voltage), input 0–10 V]</td></tr>
<tr><td>4</td><td>I2</td></tr>
<tr><td>6</td><td>Pulse</td><td>TI Pulse input terminal (0-32 kHz Pulse input)</td></tr>
<tr><td>7</td><td>Int. 485</td><td>RS-485 input terminal</td></tr>
<tr><td>8</td><td>FieldBus</td><td>Communication command via a communication option card</td></tr>
<tr><td>10</td><td>EPID1 Output</td><td>External PID 1 output</td></tr>
<tr><td>11</td><td>EPID1 Fdb Val</td><td>External PID 1 feedback</td></tr>
</table>
</td></tr>
<tr><td>PID-22 PID FDB AuxMod</td><td>The PID-30 (PID FDB AuxMod) provides formulas to calculate the final feedback value. If PID-31 (PID RefAuxSrc) is set to any other value than 'None,' the final feedback is calculated using the input values at the sources (set at PID-31 and PID-32).
<table>
<tr><td colspan="2">Setting</td></tr>
<tr><td>0</td><td>M+(G*A)</td></tr>
<tr><td>1</td><td>M*(G*A)</td></tr>
</table>
</td></tr>
</table>

Code	Description
	2 M/(G*A) 3 M+(M*(G*A)) 4 M+G*2*(A-50) 5 M*(G*2*(A-50)) 6 M/(G*2*(A-50)) 7 M+M*G*2*(A-50) 8 (M-A)^2 9 M^2+A^2 10 MAX(M,A) 11 MIN(M,A) 12 (M+A)/2 13 Square Root(M+A) M= Value by the source set at PID-30 G= Gain value set at PID-33 A= Value by the source set at PID-31
PID-23 PID Fdb Aux G	Gain value used a formula set at PID-22.
PID-24 PID Fdb Band	Sets the maximum and minimum value by adding or subtracting the PID Fdb Band value (set at PID-24) from the reference value. When the feedback value is between the maximum and minimum value, this code maintains the PID output.
PID-25 PID P-Gain1 PID-32 PID P-Gain2	Set the output ratio for differences (errors) between the reference and feedback. If the P Gain is set to 50%, then 50% of the error is output.
PID-26 PID I- Time 1 PID-33 PID I- Time 2	Sets the time to output accumulated errors. When the error is 100%, the time taken for 100% output is set. When the integral time (PID I-Time) is set to 1 second, 100% output occurs after 1 second of the error remaining at 100%. Differences in a normal state can be reduced by PID I Time. When the multi-function terminal block is set to '24 (I-Term Clear)' and is turned on, all of the accumulated errors are deleted. PID output (final frequency reference) is affected by the gains set at PID-26, PID-33, and the Acc/Dec times to achieve the PID output change based on the DRV-03 and DRV-04 settings. Therefore, consider the relationship between these values when configuring the gains and the Acc/Dec times.
PID-27 PID D-Time 1 PID-34 PID D-Time 2	Sets the output volume for the rate of change in errors. If the differential time (PID D-Time) is set to 1 ms and the rate of change in errors per sec is 100%, output occurs at 1% per 10 ms.

<table>
<tr><th>Code</th><th>Description</th></tr>
<tr><td>PID-28 PID FF-Gain</td><td>Sets the ratio that adds the target to the PID output. Adjusting this value leads to a faster response.</td></tr>
<tr><td>PID-29
PID Out LPF</td><td>Used when the PID controller output changes too quickly or the entire system is unstable, due to severe oscillation. In general, a lower value (default value=0) is used to speed up response time, but in some cases a higher value increases stability. The higher the value, the more stable the PID controller output is, but the slower the response time.</td></tr>
<tr><td>PID-30 PID Limit Hi,
PID-31 PID Limit Lo</td><td>Limit the output of the controller.</td></tr>
<tr><td>PID-35
PID Out Mode</td><td>Selects one of the PID output modes to modify the PID output. Modifications can be made by adding input values and the main operation frequency of the PID output to the final PID output value.
The following table lists the 5 modes that are available.
<table>
<tr><th colspan="2">Setting</th></tr>
<tr><td>0</td><td>PID Output</td></tr>
<tr><td>1</td><td>PID+Main Freq</td></tr>
<tr><td>2</td><td>PID+EPID1 Out</td></tr>
<tr><td>3</td><td>PID+EPID1+Main</td></tr>
<tr><td>4</td><td>PID or Main</td></tr>
</table></td></tr>
<tr><td>PID-36
PID Out Inv</td><td>When PID-36 (PID Out Inv) is set to 'Yes,' the difference (error) between the reference and the feedback is set as the feedback–reference value.</td></tr>
<tr><td>PID-37 PID Out Scale</td><td>Adjusts the volume of the controller output.</td></tr>
<tr><td>PID-40–46 Step Ref 1–7</td><td>Sets the PID reference by multi-function input settings at IN 65–71.</td></tr>
<tr><td>D-50
PID Unit Sel</td><td>Sets the unit for the control variable.
0: CUST is a custom unit defined by the user.
<table>
<tr><th colspan="4">Setting</th></tr>
<tr><td>0</td><td>CUST</td><td>21</td><td>m 3/m(m 3/min)</td></tr>
<tr><td>1</td><td>%</td><td>22</td><td>m 3/h(m 3/h)</td></tr>
<tr><td>2</td><td>PSI</td><td>23</td><td>l/s</td></tr>
<tr><td>3</td><td>˚F</td><td>24</td><td>l/m</td></tr>
<tr><td>4</td><td>˚C</td><td>25</td><td>l/h</td></tr>
<tr><td>5</td><td>inWC</td><td>26</td><td>kg/s</td></tr>
<tr><td>6</td><td>inM</td><td>27</td><td>kg/m</td></tr>
<tr><td>7</td><td>Bar</td><td>28</td><td>kg/h</td></tr>
</table></td></tr>
</table>

	8 mBar 29 gl/s 9 Pa 30 gl/m 10 kPa 31 gl/h 11 Hz 32 ft/s 12 Rpm 33 f3/s(ft3/min) 13 V 34 f3/h (ft3/h) 14 I 35 lb/s 15 kW 36 lb/m 16 HP 37 lb/m 17 mpm 38 lb/h 18 ft 39 ppm 19 m/s 40 pps 20 m3/s(m 3/S)
PID-51 PID Unit Scale	Adjusts the scale to fit the unit selected at PID-50 PID Unit Sel.
PID-52 PID Unit 0 % PID-53 PID Unit 100%	Sets the Unit 0% and Unit 100% values as the minimum and maximum values set at PID-50.

www.nicsanat.com
021-87700210
NIC SANAT
نیک صنعت

PID Command Block

www.nicsanat.com
021-87700210
NIC SANAT
نیک صنعت

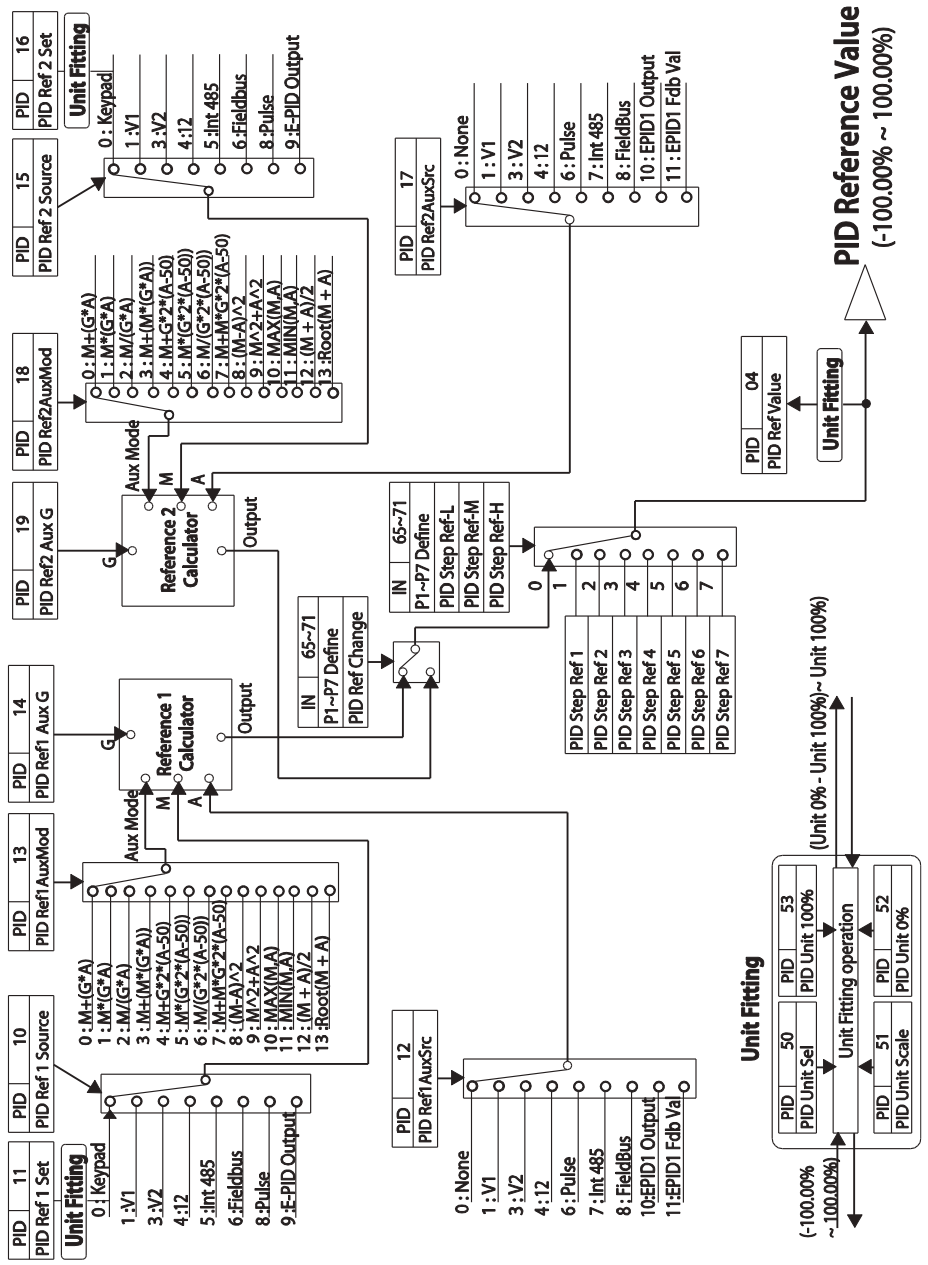
PID 11 PID Ref 1 Set
Unit Fitting
0 : Keypad
1 : V1
3 : V2
4 : I2
5 : Int 485
6 : Fieldbus
8 : Pulse
9 : E-PID Output
PID 10 PID Ref 1 Source
PID 13 PID Ref1 AuxMod
0 : M+(G*A)
1 : M*(G*A)
2 : M/(G*A)
3 : M+(M*(G*A))
4 : M+G*2*(A-50)
5 : M*(G*2*(A-50))
6 : M/(G*2*(A-50))
7 : M+M*G*2*(A-50)
8 : (M-A)^2
9 : M^2+A^2
10 : MAX(M,A)
11 : MIN(M,A)
12 : (M + A)/2
13 :Root(M + A)
Aux Mode
PID 14 PID Ref1 Aux G
G
M
A
Reference 1 Calculator
Output
PID 19 PID Ref2 Aux G
Reference 2 Calculator
PID 18 PID Ref2AuxMod
PID 15 PID Ref 2 Source
PID 16 PID Ref 2 Set
Unit Fitting
IN 65~71
P1~P7 Define
PID Ref Change
PID 12 PID Ref1AuxSrc
PID 17 PID Ref2AuxSrc
IN 65~71
P1~P7 Define
PID Step Ref-L
PID Step Ref-M
PID Step Ref-H
PID Step Ref 1
PID Step Ref 2
PID Step Ref 3
PID Step Ref 4
PID Step Ref 5
PID Step Ref 6
PID Step Ref 7
PID 04 PID Ref Value
Unit Fitting
PID Reference Value
(-100.00% ~ 100.00%)
Unit Fitting
PID 50 PID Unit Sel
PID 53 PID Unit 100%
Unit Fitting operation
PID 51 PID Unit Scale
PID 52 PID Unit 0%
(Unit 0% - Unit 100%)~ Unit 100%)
(-100.00% ~ 100.00%)

PID Feedback Block

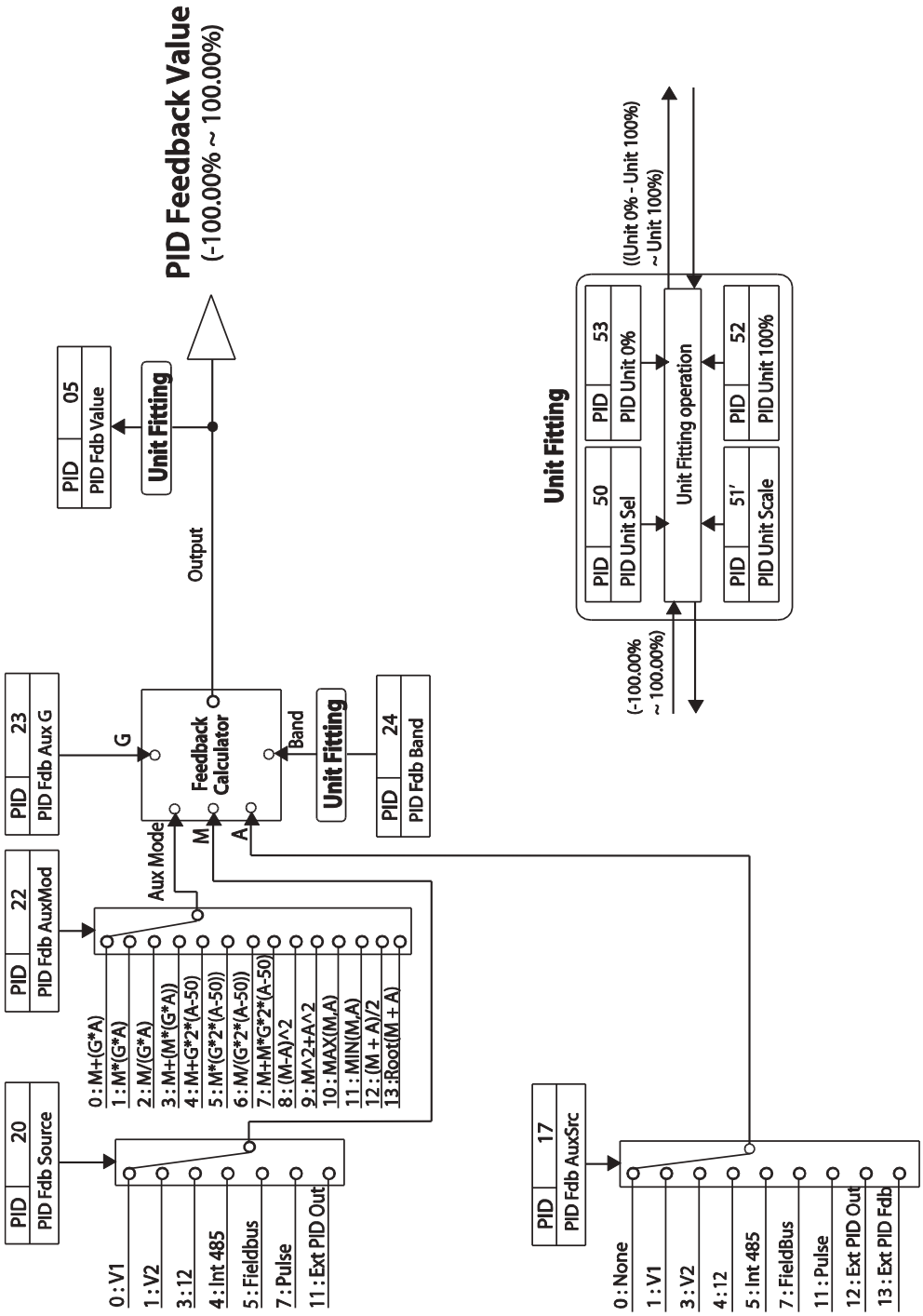

PID Output Block

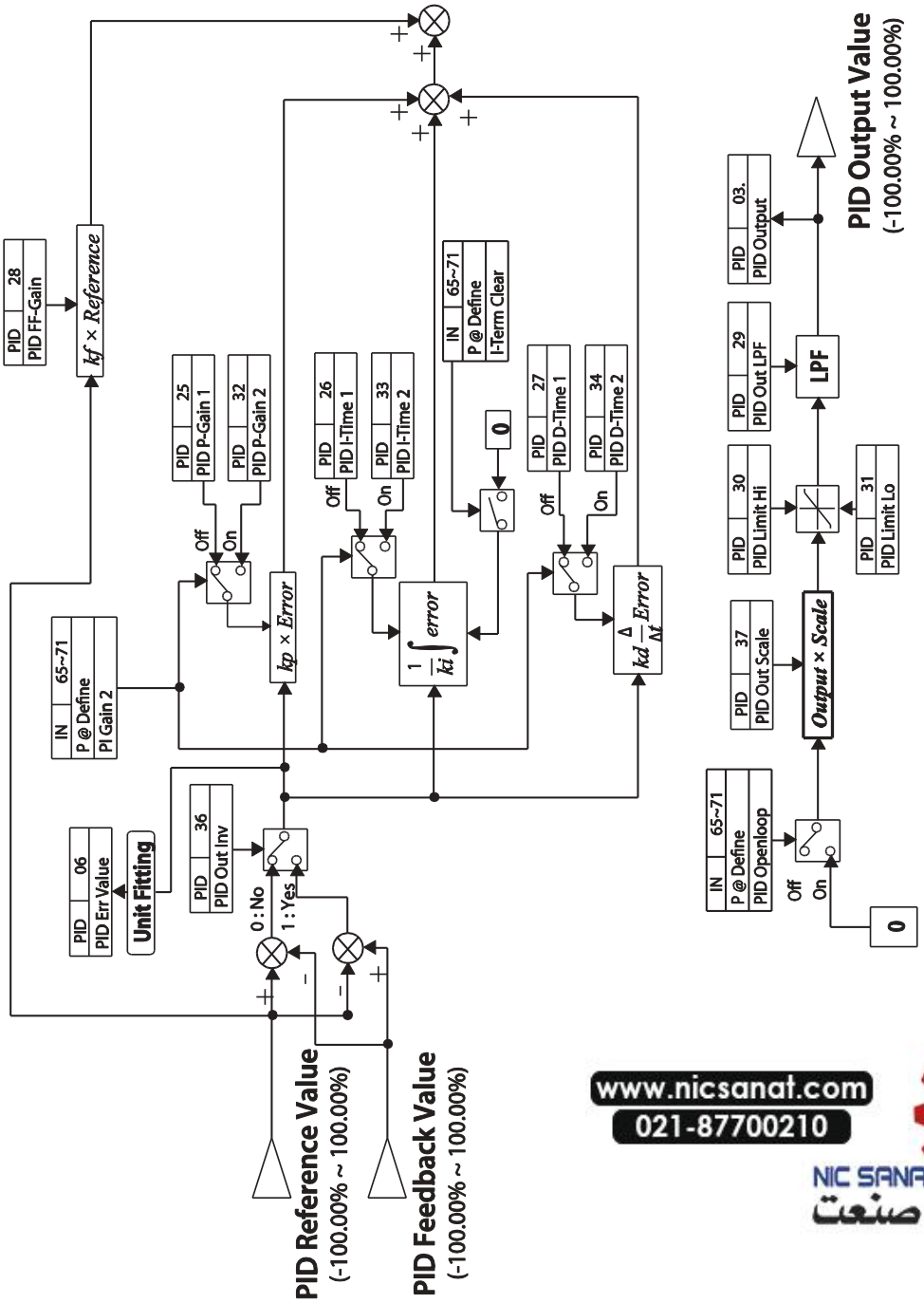

www.nicsanat.com
021-87700210
NIC SANAT
نیک صنعت

PID Output Mode Block

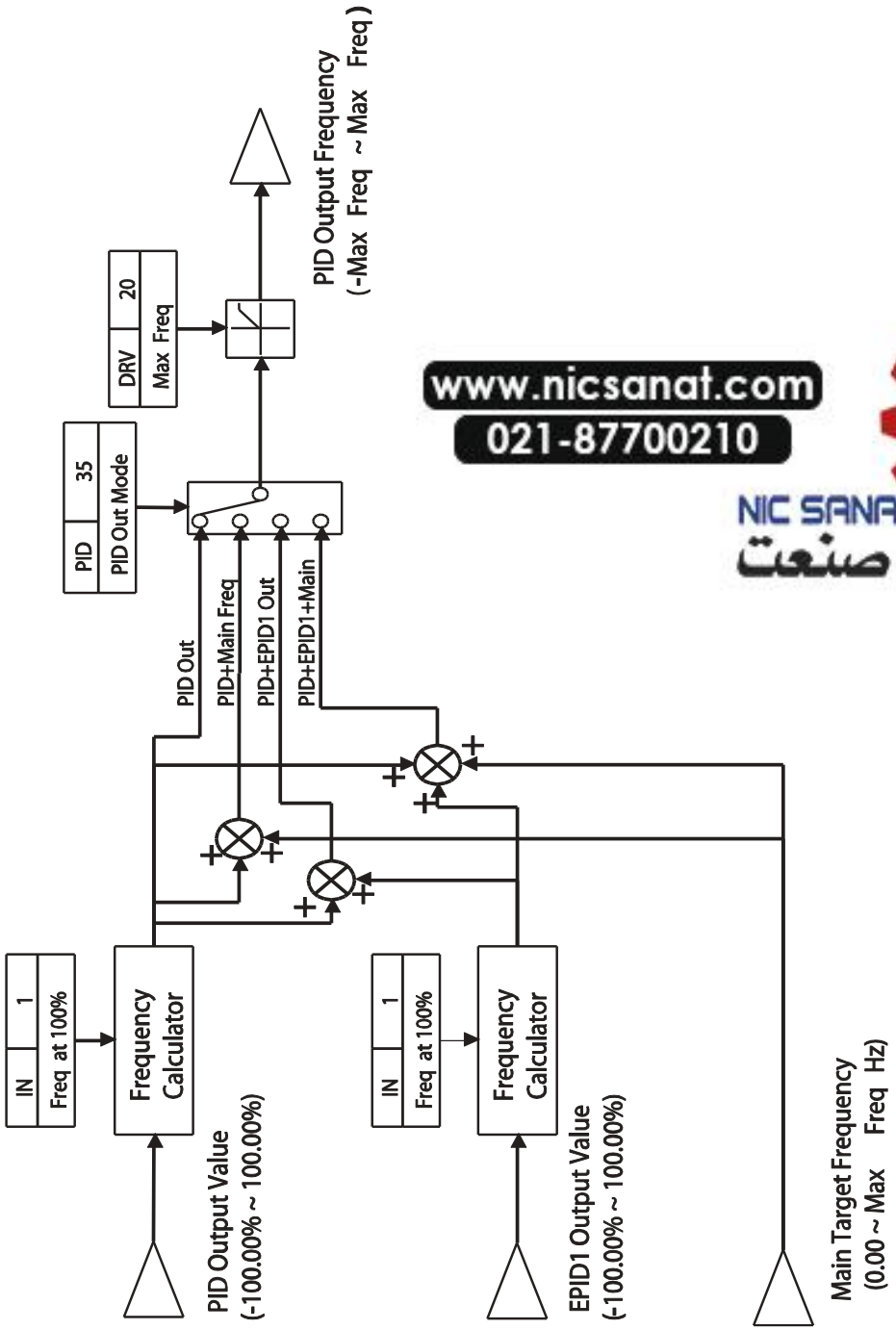

www.nicsanat.com
021-87700210
NIC SANAT
نیک صنعت

5.8.2 Soft Fill Operation

A soft fill operation is used to prevent excessive pressure from building in the pipe system at the initial stage of a pump operation. When the operation command is given, a general acceleration (without PID control) begins and continues until the output reaches the frequency set at AP1-21, for the time set at AP1-22. Then, the soft fill PID operation is performed unless the feedback value has reached the value set at AP1-23 (Soft Fill Set value). The soft fill PID operation continues until the feedback or the soft fill PID reference value reaches the value set at AP1-23 (Soft Fill Set value). When the soft fill operation ends, a normal PID operation starts.

Group	Code	Name	LCD Display	Parameter Setting		Setting Range	Unit
AP1	20	Soft Fill options	Soft Fill Sel	0	No	0–1	-
	21	Pr- PID operation frequency	Pre-PID Freq	30.00		Low Freq–High Freq	Hz
	22	Pre-PID duration	Pre-PID Delay	60.0		600.0	sec
	23	Soft fill escape value	Soft Fill Set	20.00		Unit Min–Unit Max	%
	24	Soft fill reference increment	Fill Step Set	2.00		0–Unit Band	%
	25	Soft fill reference increment cycle	Fill Step Time	20		0–9999	sec
	26	Soft fill feedback difference	Fill Fdb Diff	0.00		0–Unit Band	%

Soft Fill Operation Setting Details

Code	Description
AP1-20 Soft Fill Sel	Enables or disables the soft fill PID.
AP1-21 Pre-PID Freq	Sets the frequency range for a general acceleration without PID control. If AP1-21 (Pre-PID Freq) is set to 30 Hz, general operation is performed until the PID feedback reaches the value set at AP1-23 (Soft Fill Set). However, if the PID reference or feedback exceeds the value set at AP1-23 during the pre-PID operation, a normal PID operation starts immediately.
AP1-22 Pre-PID	In general, a PID operation starts when the feedback volume (controlled

Delay AP1-23 Soft Fill Set	variables) of PID controller exceeds the value set at AP1-23. However, if AP1-22 (Pre-PID Delay) is set, the feedback after the set time becomes the default value for the soft fill PID reference, and the inverter starts the soft fill operation. When the feedback or the Soft Fill PID Reference exceeds the Soft Fill Set value, the soft fill operation ends and a normal process PID operation begins.
AP1-24 Fill Step Set AP1-25 Fill Step Time AP1-26 Fill Fdb Diff	The Soft Fill PID Reference increases each time the set time [at AP1-25 (Fill Step Time)] is elapsed, by the amount set at AP1-24 (Fill Step Set). However, note that if the difference between the Soft Fill PID Reference value and the feedback value is greater than the value set at AP1-26 (Fill Fdb Diff value), the Soft Fill PID Reference value does not increase.

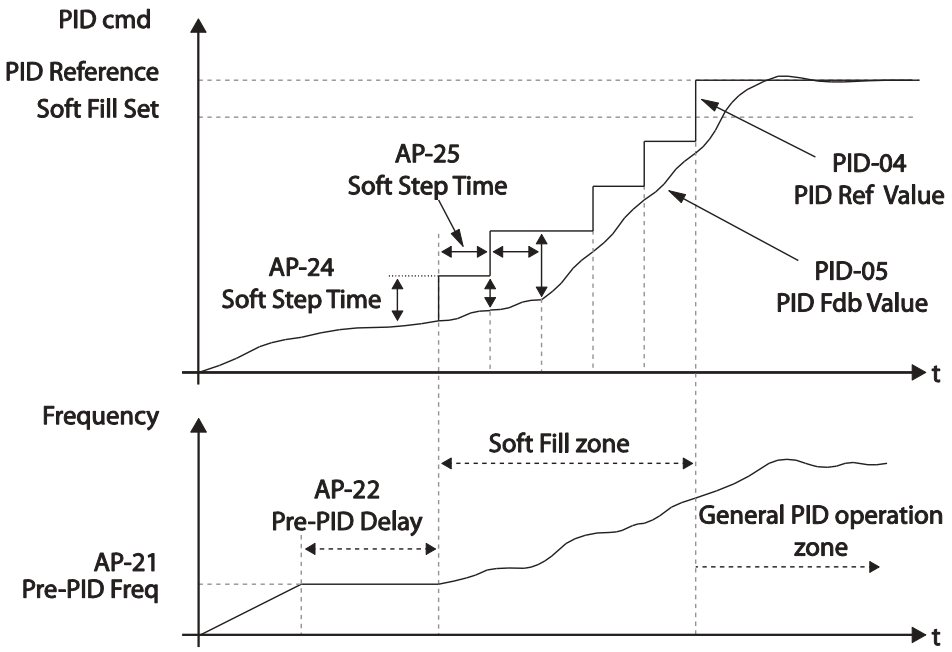

When a PID process is performed after the soft fill PID operation, the PID Reference value becomes the PID-11 PID Ref1 Set value.

www.nicsanat.com
021-87700210
NIC SANAT
نیک صنعت

5.8.3 PID Sleep Mode

If an operation continues at a frequency lower than the PID operation conditions, a boost operation is performed to extend sleep mode by raising the PID Reference, and then the inverter enters PID sleep mode. In PID sleep mode, the inverter resumes PID operation when the PID feedback falls below the PID Wakeup level and maintains the condition for the time set at AP1-09 (PID WakeUp1 DT) or AP1-13 (PID WakeUp2DT).

Note

PID Wakeup level may be calculated using the following formula:
PID Wakeup Level = PID-04 (PID Ref Value)–AP1-10 (PID WakeUp1Dev) or, PID-04 (PID Ref Value) - AP1-14 PID (WakeUp2Dev).

Two sets of configurations are available in PID sleep mode for sleep mode frequency, sleep mode delay time, wakeup variation, and wakeup delay time. One of the two configurations may be selected depending on the multi-function input terminal configuration and input conditions.

Group	Code	Name	LCD Displays	Parameter Setting	Setting Range	Unit
AP1	05	Sleep boost settings	Sleep Bst Set	0.00	0–Unit Max	Unit
	06	Sleep boost speed	Sleep Bst Freq	60.00	0.00, Low Freq–High Freq	Hz
	07	PID sleep mode 1 delay time	PID Sleep 1 DT	20.0	0–6000.0	sec
	08	PID sleep mode 1 frequency	PID Sleep1Freq	0.00	0.00, Low Freq–High Freq	Hz
	09	PID wakeup 1 delay time	PID WakeUp1 DT	20.0	0–6000.0	sec
	10	PID wakeup 1 value	PID WakeUp1Dev	20.00	0–Unit Band	Unit
	11	PID sleep mode 2 delay time	PID Sleep 2 DT	20.0	0–6000.0	sec
	12	PID sleep mode 2 frequency	PID Sleep2Freq	0.00	0.00, Low Freq–High Freq	Hz

	13	PID wakeup 2 delay time	PID WakeUp2 DT	20.0		0–6000.0	sec
	14	PID wakeup 2 value	PID WakeUp2Dev	20.00		0–Unit Band	Unit
	20	Soft Fill options	Soft Fill Sel	0	No	0–1	-

PID Operation Sleep Mode Setting Details

AP1-05 Sleep Bst Set	Sets the sleep boost volume. Feedback must reach the boost level (PID Reference+Sleep Bst Set) for the inverter to enter the Sleep Mode.
AP1-06 Sleep Bst Freq	Sets the inverter operation frequency to reach sleep boost level.
AP1-07 PID Sleep1 DT AP1-11 PID Sleep2 DT AP1-08 PID Sleep1Freq AP1-12 PID Sleep2Freq	If the operating frequency stays below the frequencies set at AP1-08 and AP1-12 for the set times at AP1-07 and AP1-11, the inverter accelerates to the PID sleep boost frequency (PID Sleep Bst Freq). Then, when the feedback reaches the value set at the boost level, the inverter enters standby mode.
AP1-09 PID WakeUp1 DT AP1-13 PID WakeUp2 DT AP1-10 PID WakeUp1Dev AP1-14 PID WakeUp2Dev	Sets the reference for PID operation in PID sleep mode. PID operation resumes when PID feedback variation (from the PID reference) exceeds the values set at AP1-10 and AP1-14, and maintains the condition for times set at AP1-09 or AP1-13.
IN-65–71 P1–7 Define	When the PID Sleep Wake 2 terminal is set and input, PID operation sleep mode is operated based on the parameter settings at AP1-11–14.

www.nicsanat.com
021-87700210
NIC SANAT
نیک صنعت

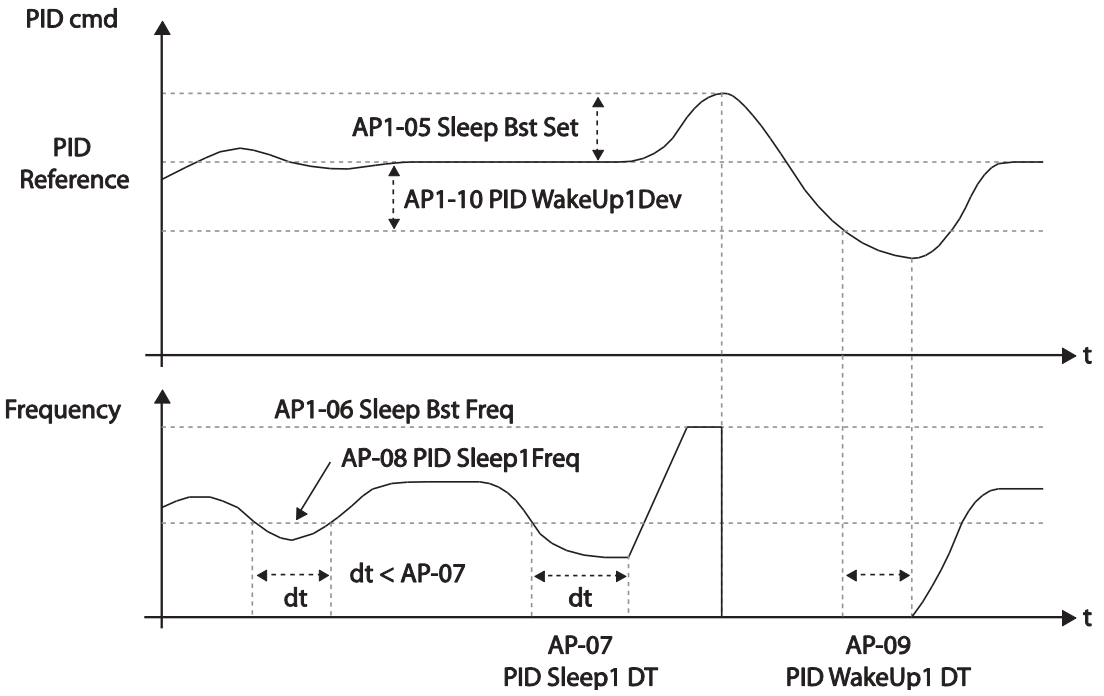

5.8.4 PID Switching (PID Openloop)

When one of the multi-function terminals (IN-65–71) is set to '25 (PID Openloop)' and is turned on, the PID operation stops and is switched to general operation. When the terminal turns off, the PID operation starts again.

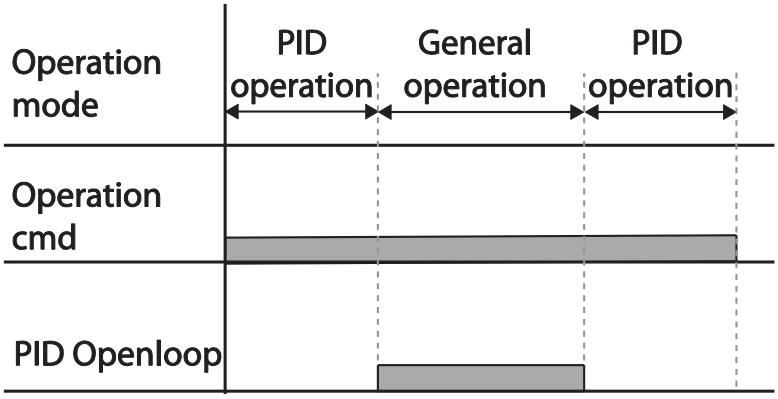

5.9 External PID

External PID refers to the PID features other than the basic PID features required to control the inverter. The following table shows the areas where external PID controls can be applied.

Purpose	Function
Speed Control	Controls speed by monitoring the current speed levels of the equipment or machinery being controlled. Control maintains consistent speed or operates at the target speed.
Pressure Control	Controls pressure by monitoring the current pressure levels of the equipment or machinery being controlled. Control maintains consistent pressure or operates at the target pressure.
Flow Control	Controls flow by monitoring the amount of flow in the equipment or machinery to be controlled. Control maintains consistent flow or operates at a target flow.
Temperature Control	Controls temperature by monitoring the current temperature levels of the equipment or machinery to be controlled. Control maintains a consistent temperature or operates at a target temperature.

Depending on the PID output mode, the EPID output value can be overlapped to the PID output. External output is also available through the analog output settings at OUT-01 and OUT-07.

Group	Code	Name	LCD Display	Parameter Setting		Setting Range	Unit
EPI	00	Jump Code	Jump Code	40		1–99	
	01	EPID 1 Mode Selection	EPID1 Mode	0	None	0–3	
	02	EPID1output monitor value	EPID1 Output	0.00		-100.00–100.00%	Unit
	03	EPID1 reference monitor value	EPID1 Ref Val	-		-	-
	04	EPID1 feedback monitor value	EPID1 Fdb Val	-		-	-
	05	EPID1error monitor value	EPID1 Err Val	-		-	-
	06	EPID1 command source selection	EPID1 Ref Src	0	Keypad	0–10	-
	07	EPID1 keypad command value	EPID1 Ref Set	Unit Min		Unit Min–Unit Max	%

Group	Code	Name	LCD Display	Parameter Setting		Setting Range	Unit
	08	EPID1 feedback source selection	EPID1 Fdb Src	0	V1	0–9	-
	09	EPID1 proportional gain	EPID1 P-Gain	50.0		0.0–300.0%	Unit
	10	EPID1 integral time	EPID1 I-Time	10.0		0.0–200.0	Sec
	11	EPID1 differentiation time	EPID1 D-Time	0.00		0–0.00	Sec
	12	EPID1 feed-forward gain	EPID1 FF-Gain	0.0		0.0–1000.0	Unit
	13	EPID1 output filter	EPID1 Out LPF	0		0–10.00	Sec
	14	EPID1 output upper limit	EPID1 Limit Hi	100.00		EPID1 Limit Lo–100.00	-
	15	EPID1 lower limit	EPID1 Limit Lo	0.00		-100.00–EPID1 Limit Hi	-
	16	EPID1 output inverse	EPID1 Out Inv	0	No	0–1	-
	17	EPID1 unit	EPID1 Unit Sel	1: %		Refer to EPID unit details table	-
	18	EEPID1 unit scale	EPID1 Unit Scl	2: X1		0: X100 1: X10 2: X1 3: X0.1 4: X0.01	-
	19	EPID1 unit 0% value	EPID1 Unit0%	Differs depending on the unit setting		X100: -32000–Unit 100% X10: -3200.0–Unit 100% X1: -320.00–Unit 100% X0.1: -32.000–Unit 100% X0.01: -3.2000–Unit 100%	-

Group	Code	Name	LCD Display	Parameter Setting		Setting Range	Unit
	20	EPID1 unit 100% value	EPID1 Unit100%	Differs depending on the unit setting		X100: Unit 0%–32000 X10: Unit 0%–3200.0 X1: Unit 0%–320.00 X0.1: Unit 0%–32.000 X0.01: Unit 0%–3.2000	-
	31	EPID2 Mode selection	EPID2 Mode	0	None	0–3	-
	32	EPID2 output monitor value	EPID2 Output	0.00		-100.00–100.00%	Unit
	33	EPID2 reference monitor value	EPID2 Ref Val	-		-	-
	34	EPID2 feedback monitor value	EPID2 Fdb Val	-		-	-
	35	EPID2 error monitor value	EPID2 Err Val	-		-	-
	36	EPID2 command source selection	EPID2 Ref Src	0	Keypad	0–10	-
	37	EPID2 keypad command value	EPID2 Ref Set	Unit Min		Unit Min–Unit Max	Unit
	38	EPID2 feedback source selection	EPID2 Fdb Src	0	V1	0–9	-
	39	EPID2 proportional gain	EPID2 P-Gain	50.0		0.0–300.0	Unit
	40	EPID2 integral time	EPID2 I-Time	10.0		0.0–200.0	Sec
	41	EPID2 differentiation time	EPID2 D-Time	0.00		0–1.00	Sec
	42	EPID2 feed-forward gain	EPID2 FF-Gain	0.0		0.0–1000.0	Unit
	43	EPID2 output filter	EPID2 Out LPF	0		0–10.00	Sec

Group	Code	Name	LCD Display	Parameter Setting	Setting Range	Unit
	44	EPID2 output upper limit	EPID2 Limit Hi	100.00	EPID2 Limit Lo–100.00	-
	45	EPID2 output lower limit	EPID2 Limit Lo	0.00	-100.00–EPID2 Limit Hi	-
	46	EPID2 output inverse	EPID2 Out Inv	0: No	0 No 1 Yes	-
	47	EPID2 unit	EPID2 Unit Sel	0: CUST	Refer to EPID unit details table	-
	48	EPID2 unit scale	EPID2 Unit Scl	2: X1	0: X100 1: X10 2: X1 3: X0.1 4: X0.01	-
	49	EPID2 unit 0% value	EPID2 Unit0%	Differs depending on the unit setting	X100: -32000–Unit 100% X10: -3200.0–Unit 100% X1: -320.00–Unit 100% X0.1: -32.000–Unit -100% X0.01: -3.2000–Unit 100%	-
	50	EPID2 unit 100% value	EPID2 Unit100%	Differs depending on the unit setting	X100: Unit 0%–32000 X10: Unit 0%–3200.0 X1: Unit 0%–320.00 X0.1: Unit 0%–32.000 X0.01: Unit 0%–3.2000	-

Note

- The EPID1–2 output (EPID OUT) is bipolar, and is limited by the EPI-14 (EPID 1 Limit Hi) and EPI-15 (EPID 1 Limit Lo) settings.
- The following are the variables used in PID operation, and how they are calculated:

- Unit MAX = EPID1 (EPID2) Unit 100% (PID-68)
- Unit Min = (2xEPID1 (EPID2) Unit0%-EPID1 (EPID2) Unit 100%)
- Unit Default = (EPID1 (EPID2) Unit 100%-EPID1 (EPID2) Unit 0%)/2

www.nicsanat.com
021-87700210
NIC SANAT
نیک صنعت

EPID Basic Operation Setting Details

<table>
<tr><th>Code</th><th>Description</th></tr>
<tr><td>EPI-01 EPID1 Mode</td><td>Sets the EPID1 modes.
<table>
<tr><th colspan="2">Setting</th><th>Function</th></tr>
<tr><td>0</td><td>None</td><td>EPID1 is not used.</td></tr>
<tr><td>1</td><td>Always On</td><td>EPID1 operates at all times.</td></tr>
<tr><td>2</td><td>During Run</td><td>Operates only when the inverter is running.</td></tr>
<tr><td>3</td><td>DI Dependent</td><td>Operates when terminal input (EPID1 Run) is on.</td></tr>
</table></td></tr>
<tr><td>EPI-02 PID Output</td><td>Displays the existing output value for the EPID controller. The unit, gain, and scale that were set in the EPID group are applied on the display.</td></tr>
<tr><td>EPI-03 EPID Ref Value</td><td>Displays the existing reference value set for the EPID controller. The unit, gain, and scale that were set in the EPID group are applied on the display.</td></tr>
<tr><td>EPI-04 EPID1 Fdb Value</td><td>Displays the existing feedback value set for the EPID controller. The unit, gain, and scale that were set in the EPID group are applied on the display.</td></tr>
<tr><td>EPI-05 EPID1 Err Value</td><td>Displays the difference between the existing reference and the feedback (error value). The unit, gain, and scale that were set in the PID group are applied on the display.</td></tr>
<tr><td>EPI1-06 EPID1 Ref Src</td><td>Selects the reference input for the EPID control. If the V1 terminal is set to an EPID1 feedback source (EPID1 F/B Source), V1 cannot be set as the EPID1 reference source (EPID1 Ref Source). To set V1 as a reference source, change the feedback source.
<table>
<tr><th colspan="2">Setting</th><th>Function</th></tr>
<tr><td>0</td><td>Keypad</td><td>Keypad</td></tr>
<tr><td>1</td><td>V1</td><td>-10-10 V input voltage terminal</td></tr>
<tr><td>3</td><td>V2</td><td rowspan="2">I2 analog input terminal [When analog voltage/current input terminal selection switch (SW2) at the terminal block is set to I (current), input 0-20 mA current. If it is set to V (voltage), input 0–10 V]</td></tr>
<tr><td>4</td><td>I2</td></tr>
<tr><td>5</td><td>Int. 485</td><td>RS-485 input terminal</td></tr>
<tr><td>7</td><td>FieldBus</td><td>Communication command via a communication option card</td></tr>
<tr><td>8</td><td>Pulse</td><td>TI Pulse input terminal (0-32 kHz Pulse input)</td></tr>
</table></td></tr>
</table>

<table>
<tr><th>Code</th><th>Description</th></tr>
<tr><td>EPI-07 EPID1 Ref Set</td><td>Set the EPI control reference type (EPI-06) to '0 (Keypad)' to enter the reference value.</td></tr>
<tr><td>EPI-09 EPID1 P-Gain</td><td>Sets the output ratio for differences (errors) between the reference and feedback. If the P-Gain x 2 is set to 50%, then 50% of the error is output. The setting range for P-Gain is 0.0-1,000%.</td></tr>
<tr><td>EPI-08 EDPID1 Fdb Src</td><td>Selects the feedback input for the EPID control. When the V1 terminal is set to an EPID feedback source (PID F/B Source), V1 cannot be set as the PID reference source (PID Ref Source). To set V1 as a reference source, change the feedback source.
<table>
<tr><th colspan="2">Setting</th><th>Function</th></tr>
<tr><td>0</td><td>Keypad</td><td>Keypad</td></tr>
<tr><td>1</td><td>V1</td><td>-10-10 V input voltage terminal</td></tr>
<tr><td>3</td><td>V2</td><td rowspan="2">I2 analog input terminal [When analog voltage/current input terminal selection switch (SW4) at the terminal block is set to I (current), input 0-20 mA current. If it is set to V (voltage), input 0–10 V voltage]</td></tr>
<tr><td>4</td><td>I2</td></tr>
<tr><td>5</td><td>Int. 485</td><td>RS-485 input terminal</td></tr>
<tr><td>7</td><td>FieldBus</td><td>Communication command via a communication option card</td></tr>
</table></td></tr>
<tr><td>EPI-10 EPID1 I-Time</td><td>Sets the time to output accumulated errors. When the error is 100%, the time taken for 100% output is set. When the integral time (EPID I-Time) is set to 1 second, 100% output occurs after 1 second of the error remaining at 100%. Differences in a normal state can be reduced by EPID I Time.
All the accumulated errors can be deleted by setting the multi-function terminal block to '42 (EPID1 ITerm Clr)' or '48 (EPID2 ITerm Clr)'.</td></tr>
<tr><td>EPI-11
EPI1 D-Time</td><td>Sets the output volume for the rate of change in errors. If the differential time (EPID1 D-Time) is set to 1 ms and the rate of change in errors per sec is 100%, output occurs at 1% per 10 ms.</td></tr>
<tr><td>EPI-12 EPID1 FF-Gain</td><td>Sets the ratio that adds the target to the EPID output. Adjusting this value leads to a faster response.</td></tr>
<tr><td>EPI-13EPID1 Out LPF</td><td>Used when the output of the EPID controller changes too fast or the entire system is unstable, due to severe oscillation. In general, a lower value (default value=0) is used to speed up response time, but in some cases a higher value increases stability. The higher the value, the more</td></tr>
</table>

	stable the EPID controller output is, but the slower the response time.
EPI-14 EPID1 Limit Hi, EPI-15 EPID1 Limit Lo	Limits the output of the controller.
EPI-16 EPID1 Out Inv	If EPID Out Inv is set to 'Yes,' the difference (error) value between the reference and the feedback is set as the feedback–reference value.
EPI-17 EPID1 Unit Sel	Sets the unit for the control variable. 0: CUST is a custom unit defined by the user.

Setting			
0	CUST	21	m 3/m(m 3/min)
1	%	22	m 3/h(m 3/h)
2	PSI	23	l/s
3	˚F	24	l/m
4	˚C	25	l/h
5	inWC	26	kg/s
6	inM	27	kg/m
7	Bar	28	kg/h
8	mBar	29	gl/s
9	Pa	30	gl/m
10	kPa	31	gl/h
11	Hz	32	ft/s
12	Rpm	33	f3/s(ft3/min)
13	V	34	f3/h (ft3/h)
14	I	35	lb/s
15	kW	36	lb/m
16	HP	37	lb/m
17	mpm	38	lb/h
18	ft	39	ppm
19	m/s	40	pps
20	m3/s(m 3/S)		

EPI-18 EPID1 Unit Scl	Adjusts the scale to fit the unit selected at EPI-17 EPI1 Unit Sel.
EPI-19 EPID1 Unit 0 % EPI-20 EPID1 Unit 100%	Sets the EPID1 Unit 0% value and the EPID1 Unit 100% value as the minimum and maximum values set at EPI1-17.

www.nicsanat.com
021-87700210
NIC SANAT
نیک صنعت

EPID1 Control block

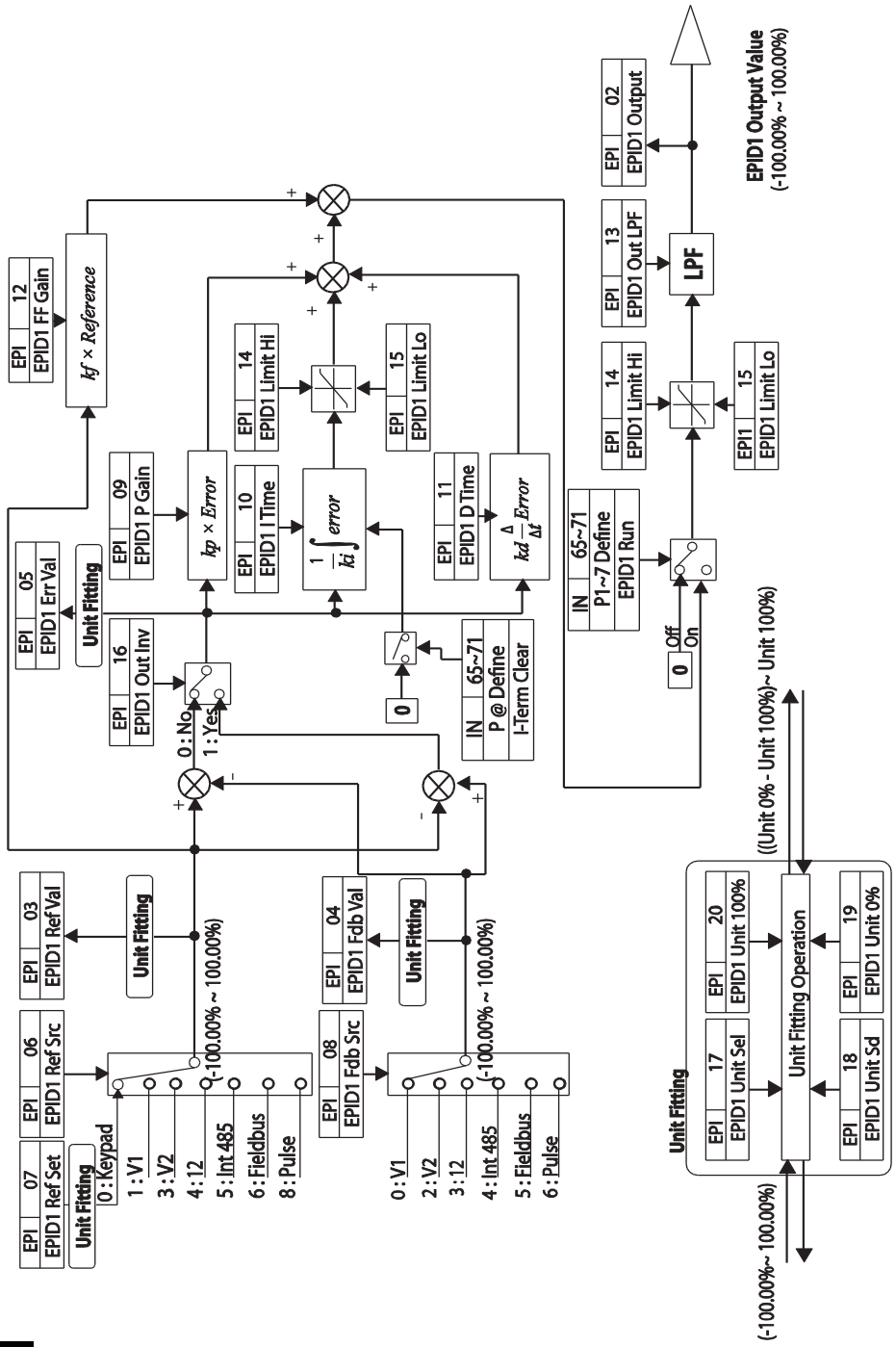

EPID2 Control block

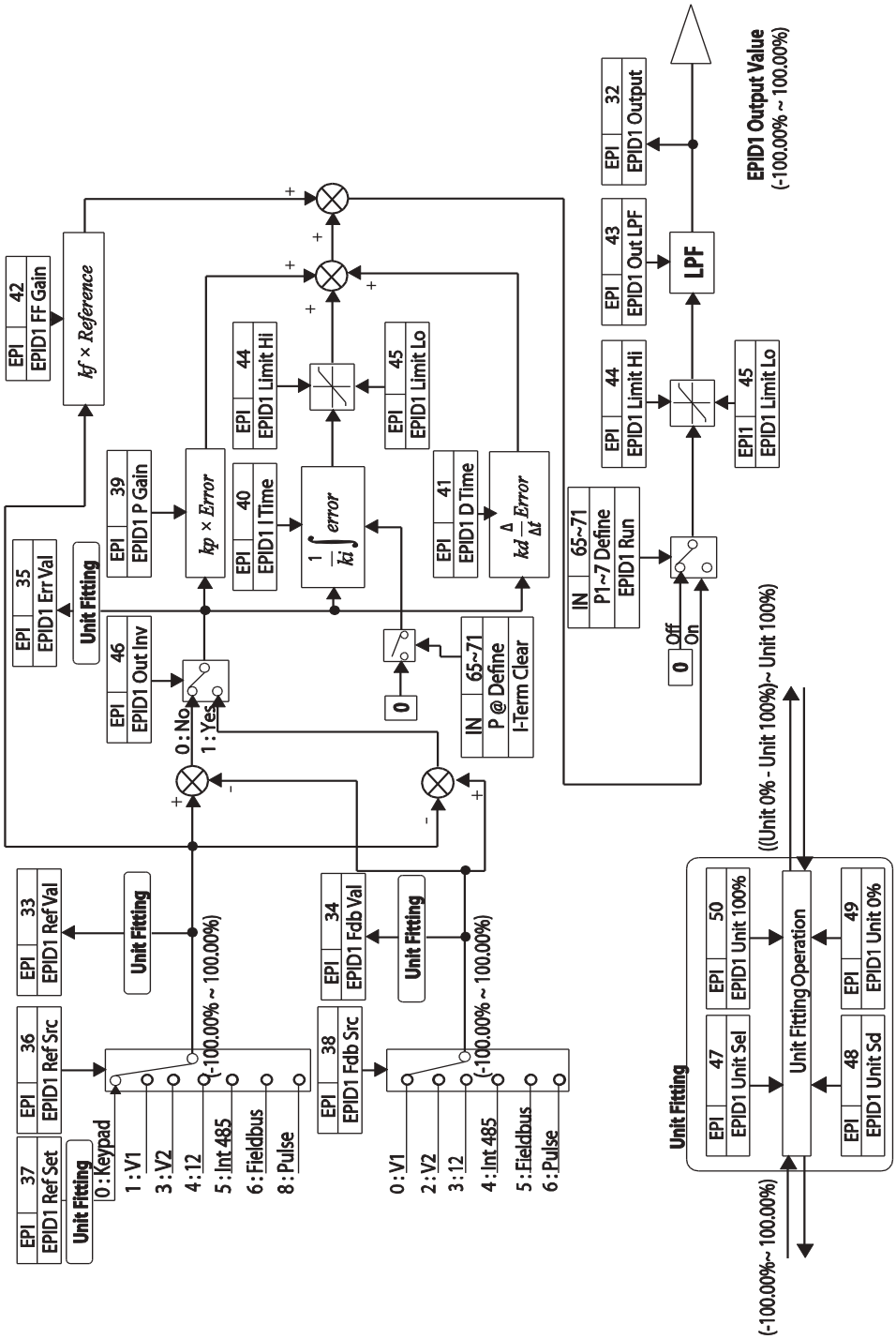

5.10 Damper Operation

A damper is a device that controls the flow in a ventilation system. If a fan and a damper are used together in a system, the inverter may be configured to operate according to the damper's operation status. During a damper operation, one of the relay outputs OUT-31–35 (Relay 1–5) may be set to '33 (Damper Control)' to output a signal based on the damper's operation status. One of the multi-function terminal inputs (IN-65–71) may also be set to '45 (Damper Open)' to receive the damper status input. The inverter starts operating when both the run command and the damper open signal are turned on (relay output setting at OUT-31–35 is not necessary).

When the time difference between the inverter run command and the damper open signal exceeds the delay time set at AP2-45 (Damper DT), damper error (Damper Err) occurs. If the damper open relay output and damper control input are set at the same time, and if the damper open signal is not received until the time set at AP2-45 (Damper DT) is elapsed (when the inverter is not operating), damper error (Damper Err) occurs.

AP2	45	Damper check time	Damper DT	-	0.1–600.0	sec
IN	65-71	P1–7 Px terminal configuration	P1–P7 Define	45 (Damper open)	-	-
OUT	31-35	Multi-function relay 1–5	Relay 1–5	33 (Damper Control)	-	-

Damper Operation Setting Details

AP2-45 Damper DT	Sets the damper open delay time. Detects the inverter run command or the damper open signal (whichever is received first) and outputs a damper error (Damper Err) if the other signal is not received until the time set at AP2-45 elapses.
IN-65–71 P1–7 define	Sets one of the multi-functional terminals to '45 (Damper Open)' to enable damper operation.
OUT-31–35 Relay 1–5	Sets one of the relay outputs to '33 (Damper Control)' to provide a relay output when the inverter run command is turned on.

www.nicsanat.com
021-87700210
NIC SANAT
نیک صنعت

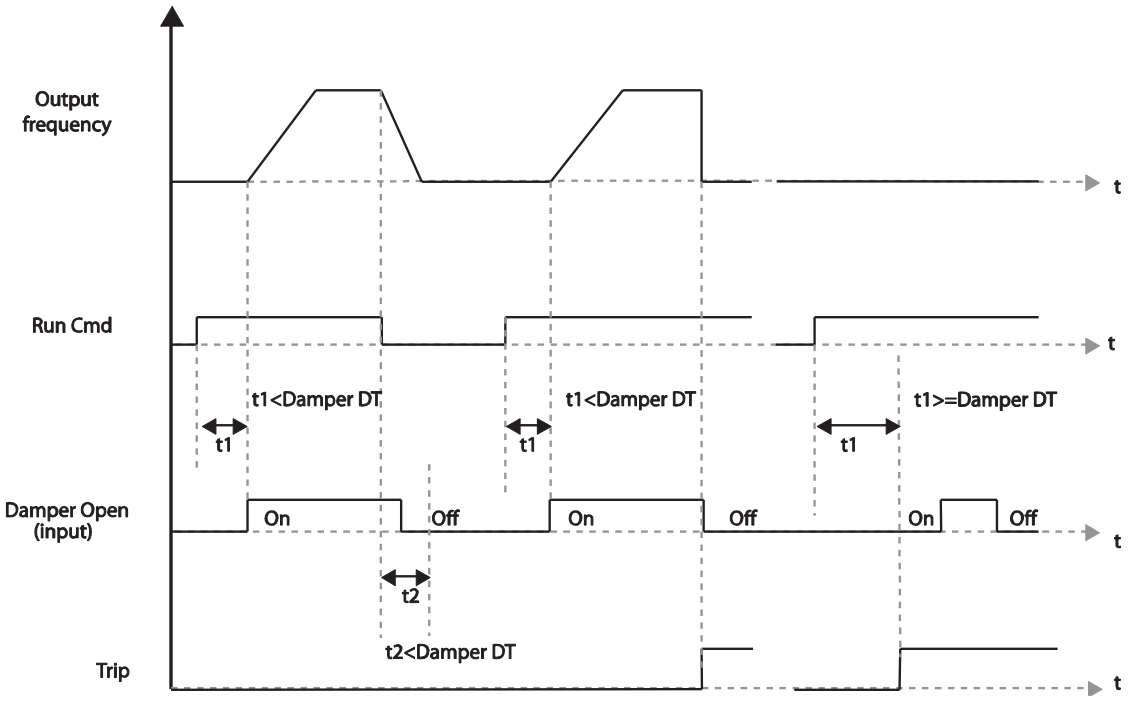

Note

Damper operation is one of the essential system features that are available in both HAND and AUTO modes.

www.nicsanat.com
021-87700210
NIC SANAT
نیک صنعت

5.11 Lubrication Operation

During a lubrication operation, the inverter outputs the lubrication signal through one of the output relays when the inverter receives a run command. The inverter does not start operating until the time set at AP2-46 (Lub Op Time) has elapsed and the Lubrication signal is turned off.

Group	Code	Name	LCD Display	Parameter Setting	Setting Range	Unit
AP2	46	Lubrication operation time	Lub Op Time		0.1–600.0	(sec)
OUT	31-35	Multi-function relay 1–5	Relay 1–5	33 (Damper Control)	-	-

Lubrication Operation Setting Details

Code	Description
AP2-46 Lub Op Time	Outputs the lubrication signal for a set time when the inverter run command is turned on. The inverter starts operating when the set time has elapsed.
OUT-31–35 Relay 1–5	Sets one of the output relays (OUT-31–35) to '30 (Lubrication)' to enable the Lubrication function.

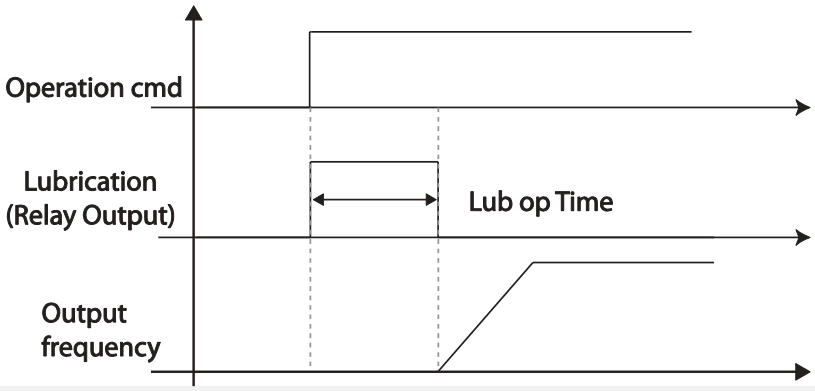

Note

- The lubrication function can be used to delay inverter operations, depending on the working environment, since the inverter waits for the time set at AP2-46 (Lub Op Time) each time a run command is received.
- Lubrication operation is one of the essential system features that are available in both HAND and AUTO modes.

5.12 Flow Compensation

In a system with a pipeline, longer pipes and higher flow rate cause greater pressure loss. A flow compensation operation can compensate for pressure loss by increasing the volume of the PID reference.

Group	Code	Name	LCD Display	Parameter Setting	Setting Range		Unit
AP1	30	Flow Comp function options	Flow Comp Sel	-	0	No	-
					1	Yes	
	31	Max Comp amount	Max Comp Value	-	0–Unit Band		-

Flow Compensation Setting Details

Code	Description
AP1-30 Flow Comp Sel	Sets the Flow Compensation function options.
AP1-31 Max Comp Value	Sets the maximum compensation volume. This function is based on a PID operation. The volume is given the same unit used for the PID reference.

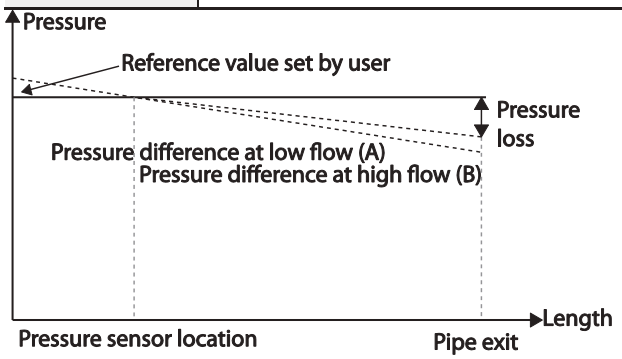

Longer pipes cause the actual pressure to decrease, which in turn increases the difference between the pressure reference and the actual pressure. When the pipe lengths are equal in two different systems, more pressure loss is caused in the system with greater flow. This explains the pressure difference between (A) and (B) in the figure (when the flows are different). To compensate for the pressure loss above, the value of AP1-31 is set to the maximum volume of compensation when the inverter has the maximum frequency, and adds to the PID reference after calculating compensation volume based on the output frequency.

The final PID reference=PID-11+Compensation amount, and compensation amount is shown

below.

$$\text{Compensation amount} = \frac{\text{Out Freq} - \text{Start Freq}}{\text{MaxFreq} - \text{Start Freq}} * (\text{PID}-53) * \frac{(\text{AP1} - 31)}{100\%}$$

PID-53: PID Output Maximum value

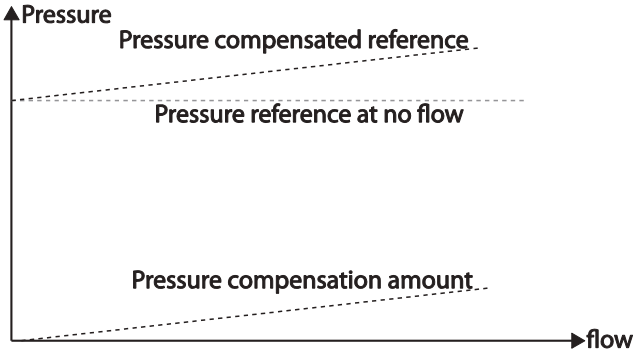

5.13 Payback Counter

The payback counter displays energy savings information by comparing the average energy efficiency for operations with and without the inverter. The energy savings information is displayed as kWh, saved energy cost, and CO2 emission level.

Group	Code	Name	LCD Display	Parameter Setting	Setting Range	Unit
AP2	87	1st MOTOR average POWER	M1 AVG PWR	Inverter capacity	0.1–500.0	kW
	88	2nd MOTOR average POWER	M2 AVG PWR	Inverter capacity	0.1–500.0	kW
	89	Cost per kWh	Cost per kWh	0	0.0–1000.0	kW
	90	Saved kWh	Saved kWh	0	-999.9–999.9	kWh
	91	Saved MWh	Saved MWh	0	-32000–32000	MWh
	92	Saved Cost below 1000 unit	Saved Cost1	0	-999.9–999.9	-
	93	Saved Cost over 1000 unit	Saved Cost2	0	-32000–32000	-
	94	Reduced CO2	CO2 Factor	0.5	0.1–5.0	-

Group	Code	Name	LCD Display	Parameter Setting	Setting Range		Unit
		conversion Factor					
	95	Reduced CO2 (Ton)	Saved CO2 - 1	0	-9999–9999		Ton
	96	Reduced CO2 (1000 Ton)	Saved CO2 - 2	0	-160–160		Ton
	97	Reset Energy payback parameter	Reset Energy	0	0	No	-
					1	Yes	

Energy Payback Value Function Setting Details

Code	Description
AP2-87 M1 AVG PWR	Sets the average power value of the #1 motor and calculates the energy savings based on the set value.
AP2-88 M2 AVG PWR	Sets the average power of the #2 motor and calculates energy savings based on the set value.
AP2-89 Cost per kWh	Sets the cost per 1 kWh. Multiply the energy payback counter value with the value set at AP2-89 to calculate the total saved cost. This value is displayed in AP2-92–93.
AP2-90 Saved kWh AP2-91 Saved MWh	Displays the saved energy in kWh (AP2-90) and MWh (AP2-91). When the value reaches 999.9 (kWh) and continues to increase, AP2-91 becomes 1 (MWH), AP2-90 resets to 0.0, and it continues to increase.
AP2-92 Saved Cost1 AP2-93 Saved Cost2	Displays the saved cost to the one-tenth place at AP2-92. When the value reaches 999.9 and continues to increase, AP2-93 becomes 1, AP2-92 resets to 0.0, and it continues to increase.
AP2-94 CO2 Factor	Sets the CO2 reduction rate per 1 MW (default value=0.5). The value is multiplied with AP2-90 and AP2-91, and the resulting values are displayed at AP2-95 and AP2-96.
AP2-95 Saved CO2-1 AP2-96 Saved CO2-2	Displays the CO2 reduction rate in tons (AP2-95) and kilo-tons (AP2-96).
AP2-97 Reset Energy	Resets all the saved energy parameters.

Note

Note that the actual saved energy may differ from the displayed values, since the resulting values are affected by user-defined codes such as AP2-87 and AP2-88.

5.14 Pump Clean Operation

The pump clean operation is used to remove the scales and deposits attached on the impeller inside a pump. This operation keeps the pump clean by performing a repetitive run-and-stop operation of a pump. This prevents loss in pump performance and premature pump failures.

Group	Code	Name	LCD Display	Parameter Setting	Setting Range		Unit
AP2	15	Pump clean mode 1	Pump Clean Mode1	0: None	0	None	-
					1	DI Dependent	
					2	Output Power	
					3	Output Current	
	16	Pump clean mode 2	Pump Clean Mode2	0: None	0	None	-
					1	Start	
					2	Stop	
					3	Start & Stop	
	17	Pump clean load setting	PC Curve Rate	100.0	100.0–200.0		%
	18	Pump clean reference band	PC Curve Band	5.0	0.0–100.0		%
	19	Pump clean operation delay time	PC Curve DT	60.0	0–6000.0		sec
	20	Pump clean start delay time	PC Start DT	10.0	0–6000.0		Sec
	21	0 speed operating time at Fx/Rx switching	PC Step DT	5.0	1.0–6000.0		Sec
	22	Pump clean Acc time	PC Acc Time	10.0	0–600.0		Sec
	23	Pump clean Dec time	PC Dec Time	10.0	0–600.0		Sec
	24	Forward step run time	Fwd Steady T	10.0	1.0–6000.0		Sec

Group	Code	Name	LCD Display	Parameter Setting	Setting Range	Unit
	25	Forward step run frequency	Fwd SteadyFreq	30	0.00, Low Freq–High Freq	Hz
	26	Reverse step run time	Rev Steady T	10.0	1.0–6000.0	Sec
	27	Reverse step run frequency	Rev SteadyFreq	30	0.00, Low Freq–High Freq	Hz
	28	Number of Fx/Rx steps for pump clean	PC Num of Steps	5	0–10	-
	29	Pump clean cycle monitoring	Repeat Num Mon	-	-	-
	30	Pump clean repeat number	Repeat Num Set	5	0–10	-
	31	Operation after pump clean	PC End Mode	0	0 Stop 1 Run	-
	32	Pump clean continuous time limit	PC Limit Time	10	6–60	min
	33	Pump clean continuous number limit	PC Limit Num	3	0–10	-

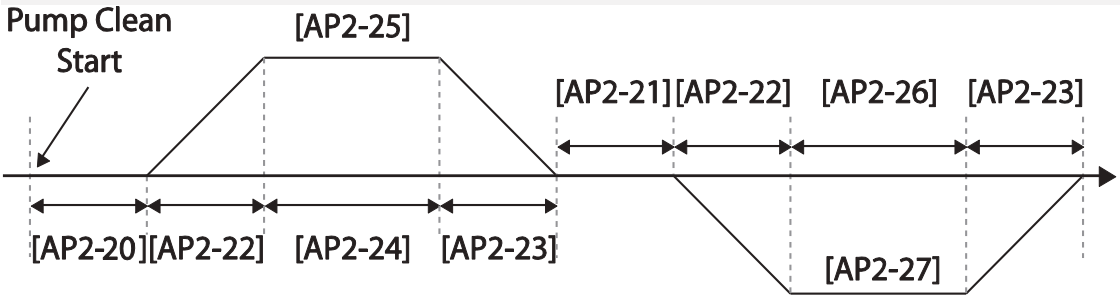

<Basic Pump Clean Operation>

When a pump clean start command is given, the inverter waits until the delay time set at AP2-19

elapses, accelerates by the acceleration time set at AP2-22, and operates at the frequency set at AP2-25. The pump runs for the time set at AP2-24, decelerates by the time set at AP2-23, and then stops. This operation repeats in the forward and reverse directions (one after another) for the number of times set at AP2-28 (PC Num of Step). Each time the steps (Fx/Rx) switch, the inverter waits at a stop state for the time set at AP2-21 before going on with the next step. One step in the forward direction and another step in the reverse direction makes one cycle. The number of pump clean cycles is set at AP2-30. In the figure above, AP2-28 is set to '1', and AP2-30 is set to '1'.

Pump Clean Function Setting Details

<table>
<tr><th>Code</th><th>Description</th></tr>
<tr><td>AP2-15 PumpClean Mode</td><td>Sets the pump mode.
<table>
<tr><th colspan="2">Setting</th><th>Function</th></tr>
<tr><td>0</td><td>None</td><td>Pump Clean function is not used.</td></tr>
<tr><td>1</td><td>DI defendant</td><td>Set one of the terminal inputs to '46 (Pump Clean Sel)' and performs the pump clean operation by turning on the terminal.</td></tr>
<tr><td>2</td><td>Power</td><td>Performs a pump clean operation when a pump consumes more power than it is supposed to consume in a normal operation.</td></tr>
<tr><td>3</td><td>Current</td><td>Performs a pump clean operation when a pump consumes more current than it is supposed to consume in a normal operation.</td></tr>
</table></td></tr>
<tr><td>AP2-16 PumpClean Sel</td><td>Sets the pump clean start mode.
<table>
<tr><th colspan="2">Setting</th><th>Function</th></tr>
<tr><td>0</td><td>None</td><td>Pump clean is performed only by the function set at AP2-20.</td></tr>
<tr><td>1</td><td>Start</td><td>Pump clean is performed each time the inverter starts operating.</td></tr>
<tr><td>2</td><td>Stop</td><td>Pump clean is performed each time the inverter stops operating.</td></tr>
<tr><td>3</td><td>Start & Stop</td><td>Pump clean is performed each time the inverter starts or stops operating.</td></tr>
</table></td></tr>
<tr><td>AP2-17 PC Curve Rate
AP2-18 PC Curve Band
AP2-19 PC Curve DT</td><td>If AP2-15 is set to 'Power' or 'Current,' multiply the load characteristic curve set at AP2-2–AP2-10 by the value set at AP2-17 (100[%]+AP2-17[%]), and reset the load characteristic curve for the pump clean operation (refer to the load tune features for AP2-2–AP2-10 setting values).
Apply (rated inverter current x AP2-18 setting value) and (rated</td></tr>
</table>

Code	Description
	motor x AP2-18 setting value) to the pump clean load curve calculated by AP2-17 to calculate the final pump clean load curve. The inverter performs pump clean operation when the inverter continues operating for the time set at AP2-19.
AP2-20 Clean Start DT	When AP2-15 is set to 'Power' or 'Current', a pump clean is performed if the inverter operation power or current stays above the pump clean load characteristic curve (defined by AP2-17 and AP2-18) for the time set at AP2-19.
AP2-21 Clean Step DT	Sets the time for the inverter to maintain 0 speed (stop) before the inverter switches from forward to reverse operation during a pump clean.
AP2-22 PumpClean AccT AP2-23 PumpClean DecT	Sets the Acc/Dec times for pump clean operations.
AP2-24 Fwd Steady Time AP2-26 Rev Steady Time	Sets the time to maintain forward and reverse operations.
AP2-25 Fwd SteadyFreq AP2-27 Rev SteadyFreq	Sets the forward and reverse operation frequencies.
AP2-28 PC Num of Steps	Determines the number of steps (acceleration/deceleration/stop) in one cycle. Each operation, either in the forward or reverse direction, constitutes one step. If set to '2,' one forward step and one reverse step constitute one cycle.
AP2-31 PC End Mode	Determines the inverter operation after pump clean operation. Setting: 0 Stop — Function: This stops the inverter after pump cleaning. Setting: 1 Start — Function: The inverter operates based on the inverter's command status after the pump cleaning. (If a terminal command is received, the inverter performs the operation it was performing before the pump clean operation.)
AP2-29 Repeat Num Mon	Displays the number of the current pump cleaning cycle.
AP2-30 Repeat Num Set	Sets the number of cycles for one pump clean operation set at AP2-21–AP2-28.
AP2-32 PC Limit Time AP2-33 PC Limit Num	Frequent pump clean operations may indicate a serious system problem. To warn the users of potential system problems, an error (CleanRPTErr) occurs if the number of pump clean operation

Code	Description
	exceeds the number set at AP2-33 within the time period set at AP2-32.

Note

- When the run prevent feature is active and an operation in the prevented direction is required to perform a pump clean operation, the inverter operates at the 0 speed for the time set at AP2-24 and AP2-26 (Steady Time).
- To stop the pump clean operation, press the OFF key on the keypad or turn it off at the terminal input.
- If the pump clean operation is configured for terminal input and it is turned on, and if ADV-10 (PowerOn Resume) is set to 'Yes', a pump clean operation is performed when the inverter is turned on.
- When performing a pump clean operation via terminal input,
  - if the terminal input is turned off instantly after it is turned on (the operation is triggered), 1 pump clean cycle is operated.
  - if ADV-10 (PowerOn Resume) is set to 'Yes', and the terminal input is turned off instantly after it is turned on (the operation is triggered), and if the inverter is turned off during a pump clean then is turned back on again, the pump clean operation is not resumed (because the input terminal is not on when the inverter is turned on).
  - if the terminal input is kept on after it is initially turned on, 1 pump clean cycle is operated.

5.15 Start & End Ramp Operation

This function is used to rapidly accelerate the pump to the normal operating level, or to rapidly decelerate the pump and stop it. Start & End ramp operation is performed when ADV-24 (Freq Limit) is set to '1 (Yes).'

Group	Code	Name	LCD Display	Parameter Setting	Setting Range		Unit
AP2	40	Start & End Ramp Gradient	Start&End Ramp	0: No	0	No	-
					1	Yes	
	41	StartRampAcc	StartRampAcc	10.0	0–600.0		Sec
	42	EndRampDec	EndRampDec	10.0	0–600.0		Sec

Group	Code	Name	LCD Display	Parameter Setting	Setting Range		Unit
ADV	24	Frequency limit options	Freq Limit	0: No	0	No	-
					1	Yes	
	25	Low Freq minimum value	Freq Limit Lo	30.00	Start Freq–Max Freq		Hz
	26	Low Freq maximum value	Freq Limit Hi	60.00	Freq Limit Lo–Max Freq		Hz

Start & End Ramp Operation Setting Details

Code	Description
AP2-40 Start&End Ramp	Sets the pump Start & End Ramp options. Setting / Function 0 No — The Start & End Ramp operation is not used. 1 Yes — Use the Start & End Ramp operation.
AP2-41 Start Ramp Acc	Refers to the time it takes to reach the minimum pump operation frequency for a Start & End Ramp operation (Freq Limit Lo) set at ADV-25 when the inverter starts (it is different from DRV-03 acceleration gradient).
AP2-42 End Ramp Dec	Refers to the time it takes to reach the 0 step (stop) from the minimum pump operation frequency for a Start & End Ramp operation (Freq Limit Lo) set at ADV-25 (it is different from DRV-03 deceleration gradient).

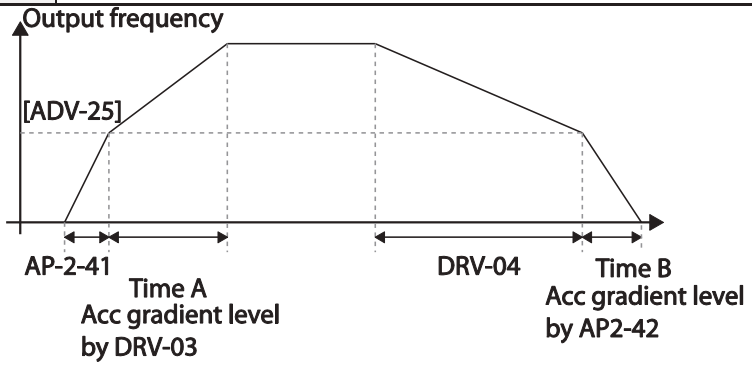

< Start&End Ramp Adjustment>

In the figure above, AP2-41 defines the acceleration time to the minimum operation frequency ADV-25 (Freq Limt Lo). AP2-42 defines the deceleration time from the minimum operation frequency to a stopped state. Time A (normal acceleration time set at DRV-03) and Time B (normal deceleration time set at DRV-04) in the figure will change according to the Acc/Dec gradients defined by AP2-41 and AP2-42.

5.16 Decelerating Valve Ramping

This function is used to prevent pump damage due to abrupt deceleration. When the pump operation frequency reaches the valve ramp frequency (AP2-38 Dec Valve Freq) while decelerating rapidly based on the deceleration ramp time (set at AP2-42), it begins to slow down the deceleration based on the deceleration valve ramp time (set at AP2-39 DecValve Time).

Group	Code	Name	LCD Display	Parameter Setting	Setting Range		Unit
AP2	38	Dec valve ramping start frequency	Dec Valve Freq	40.00	Low Freq–High Freq		Hz
	39	Dec valve ramping time	DecValve Time	0.0	0–6000.0		Sec
ADV	24	Frequency limit options	Limit Mode	0: No	0	No	-
					1	Yes	
	25	Low Freq minimum value	Freq Limit Lo	30.00	Start Freq–Max Freq		Hz
	26	Low Freq maximum value	Freq Limit Hi	60.00	Freq Limit Lo–Max Freq		Hz

Decelerating valve ramp operates when ADV-24 (Freq Limit) is set to '1 (Yes)'.

Deceleration Valve Ramping Setting Details

Code	Description
AP2-38 Dec Valve Freq	Sets the start frequency where the slow deceleration begins in order to prevent pump damage when the inverter stops. Decelerating valve ramping is performed from the frequency set at AP2-38 to the frequency limit set at ADV-25 (low frequency limit for pump operation).
AP2-39 DecValve Time	Sets the time it takes to decelerate from the frequency set at AP2-38 to the frequency limit set at ADV-25 (low frequency limit for pump operation).

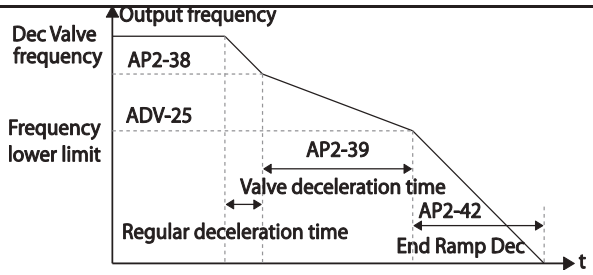

The time set at AP2-39 refers to the absolute time that it takes for the pump to decelerate from the frequency set at AP2-38 to the frequency limit set at ADV-25.

5.17 Load Tuning

Load tuning refers to an operation that detects the load applied to a specific section of the inverter operation (current and voltage) and creates an ideal load curve for the under load and pump clean operations. The two set points to define the section are user-definable, and are set at 50% and 85% of the base frequency (DRV-18 Base Freq) by default. The load tuning result values are saved at codes AP2-2–AP2-10. These values are user definable as well.

The minimum set point for the load tuning begins at 15% of the base frequency (DRV-18 Base Freq), and the maximum set point can be set up to the base frequency. If the frequency limit is set to '1 (Yes)' at ADV-24 (Freq Limit), the range is limited within the frequencies set at ADV-25 (Freq Limit Lo) and ADV-26 (Freq Limit Hi).

Group	Code	Name	LCD Display	Parameter Setting	Setting Range		Unit
AP2	01	Load curve Tuning	Load Tune	No	0	No	-
					1	Yes	
	02	Load curve Low Freq	Load Fit LFreq	30.00	Base Freq*15%–Load Fit HFreq		Hz
	03	Current for Low Freq	Load Fit LCurr	40.0	0.0–200.0		%
	04	Power for Low Freq	Load Fit LPwr	30.0	0.0–200.0		%
	08	Load curve High Freq	Load Fit HFreq	51.00	Load Fit LFreq–High Freq		Hz
	09	Current for High Freq	Load Fit HCurr	80.0	0.0–200.0		%
	10	Power for High Freq	Load Fit HPwr	80.0	0.0–200.0		%
	11	Load current for frequency	Load Curve Cur	-	-		%
	12	Load power for frequency	Load Curve Pwr	-	-		%

Load Tuning Setting Details

<table>
<tr><th>Code</th><th>Description</th></tr>
<tr><td>AP2-01 Load Tune</td><td>The inverter performs an automatic tuning to generate an ideal system load curve.
<table>
<tr><th colspan="2">Setting</th><th>Function</th></tr>
<tr><td>0</td><td>None</td><td>Load tuning is not used.</td></tr>
<tr><td>1</td><td>Load Tune</td><td>Start load tuning.</td></tr>
</table></td></tr>
<tr><td>AP2-02 Load Fit LFreq</td><td>Defines the first frequency set point for load tuning (user definable).</td></tr>
<tr><td>AP2-03 Load Fit LCurr
AP2-04 Load Fit LPwr</td><td>Displays the current and power measured at the frequency set at AP2-02 as a percentage (%) value, based on motor rated current and rated power. Values for AP2-03 and AP2-04 are user definable.</td></tr>
<tr><td>AP2-08 Load fit HFreq</td><td>Defines the second frequency set point for load tuning(user definable).</td></tr>
<tr><td>AP2-09 Load Fit HCurr
AP2-10 Load Fit HPwr</td><td>Displays the current and power measured at the frequency set at AP2-08 as a percentage (%) value, based on motor rated current and rated power. Values for AP2-09 and AP2-10 are user definable.</td></tr>
<tr><td>AP2-11 Load Curve Cur
AP2-12 Load Curve PWR</td><td>Monitors the load curve value set at AP2-1 (Load Tune) based on the current output frequency.</td></tr>
</table>

When a load tuning is performed, the inverter measures for 10 seconds the motor current and power, at the frequencies set at AP2-02 and AP2-09. The motor current and power values measured here are used to generate an ideal load curve.

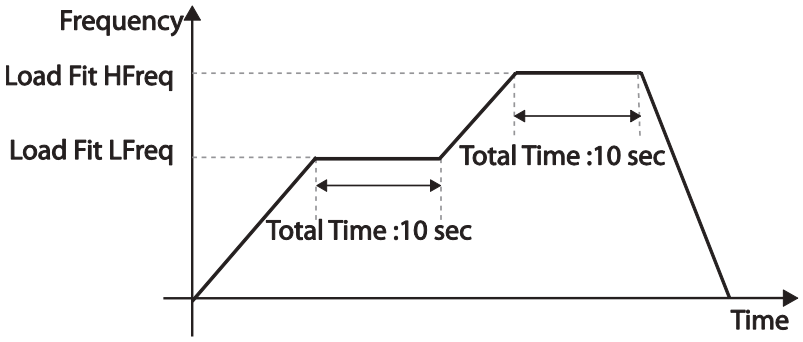

Note

Load tuning is not available while the inverter is operating.

Caution

- If the frequencies for AP2-02 (Low Freq) and AP2-08 (High Freq) are set too close to each other, the resulting load curve may not reflect the actual (ideal) load curve. Therefore, it is recommended that you keep the AP2-02 and AP2-08 frequencies as close to the factory defaults as possible.
- If a secondary motor is in use, note that the existing load curve for the main motor will be applied to the secondary motor unless a load tuning has been performed for the secondary motor.

5.18 Level Detection

When the inverter is operating at or above the frequency set at PRT-74 (LDT Level), this function is used to triggers a fault trip or sets a relay output if the source value is out of the range of the user-defined values. If the reset restart feature is turned on, the inverter continues to operate based on the run command after the LDT fault trip is released.

Group	Code	Name	LCD Display	Parameter Setting	Setting Range	Unit
PRT	70	Level detection mode	LDT Sel	Warning	None/Warning/Trip	
	71	Level detection range	LDT Area Sel	1 . Above Level	0–1	-
	72	Level detection source	LDT Source	0: Output Current	0–12	-
	73	Level detection delay time	LDT Dly Time	2.0	0–9999	Sec
	74	Level detection reference value	LDT Level	Source setting is used	Source setting is used	-
	75	Level detection bandwidth	LDT Band width	Source setting is used	Source setting is used	-
	76	Level detection frequency	LDT Freq	20.00	0.00–Max Freq (Hz)	Hz
	77	Level detection trip restart time	LDT Restart DT	60.0	0.0–3000.0	Min
	96	LDT Auto restart count	LDT Rst Cnt	1	0~6000	-
	97	LDT Auto restart	LDT Rst Cnt	-	0~6000	-

		cycle count	M			
	98	LDT Auto restart cycle Initialization time	LDT Cnt Clr T	60	0~6000	Sec

Level Detection Setting Details

PRT-70 LDT Sel	Determines the inverter operation when a level detection trip occurs. Setting / Functions 0 None — No operation 1 Warning — The inverter displays a warning message. 2 Free-Run — The inverter free-runs, then stops. 3 Dec — The inverter decelerates, then stops.
PRT-71 Level Detect	Sets the level detection range. Setting / Operation 1 Below — Triggers a level detect fault trip when the inverter operates below the frequency set by the user. 2 Above — Triggers a level detect fault trip when the inverter operates above the frequency set by the user.

www.nicsanat.com
021-87700210
NIC SANAT
نیک صنعت

Code	Description
PRT-72 LDT Source	Selects a source for level detection.

Setting		Function
0	Output Current	Sets the output current as the source.
1	DC Link Voltage	Sets the DC link voltage as the source.
2	Output Voltage	Sets the output voltage as the source.
3	kW	Sets the output power as the source.
4	hp	Sets the output power as the source.
5	V1	Sets the V1 terminal input as the source.
6	V2	Sets the V2 terminal input as the source.
7	I2	Sets the I2 terminal input as the source.
8	PID Ref Value	Sets the PID reference as the source.
9	PID Fdb Val	Sets the PID feedback as the source.
10	PID Output	Sets the PID output as the source.
11	EPID1 Fdb Val	Sets the external PID feedback 1 as the source.
12	EPID2 Fdb Val	Sets the external PID feedback 2 as the source.

PRT-73 LDT Dly Time	Sets the delay time for the operation set at PRT-70.
PRT-74 LDT Level	Sets the level for the level detection. The following are the setting ranges and default values by the source.

Source	Default Value	Setting Range
Output Current	Rated current	0–150% of the rated current
DC Link Voltage	350 700	0–450 V (2 Type) 0–900 V (4 Type)
Output Voltage	230 460	0–250 (2 Type) 0–500 (4 Type)
kW	90% of the Inverter rated power	0–150% of the Inverter rated power
V1	9.00 V	0.00–12.00
V2	9.00	-12.00–12.00
I2	18.00	0.00–25.00
PID Ref Value	50	PID Unit Min–PID Unit Max
PID Fdb Val	50	PID Unit Min–PID Unit Max
PID Output	50	-100.00%–100.00%
EPID1 Fdb Val	50	EPID1 Unit Min–EPID1 Unit Max

	EPID2 Fdb Val | 50 | EPID2 Unit Min–EPID2 Unit Max
PRT-75 LDT Band Width	If the source is detected below the set level, it must be adjusted to be above the 'LDT Level + LDT Band Width' value to release the level detection fault trip. If the source is detected above the set level, it must be adjusted to be below the 'LDT Level - LDT Band Width' value to release the level detection fault trip. The level detection trip bandwidth is 10% of the maximum source value.
PRT-76 LDT Freq	Sets the start frequency for the level detection. When setting the level detection frequency, take into consideration the source type and the LDT level.
PRT-77 LDT Restart DT	If PRT-08 (RST restart) is set to 'YES,' the inverter restarts after the time set at PRT-76 elapses when an LDT trip is released. The LDT Restart operates each time an LDT trip is released. If PRT-77 is set to any other value than '0' and the inverter is operating in HAND mode, the inverter resets and the LDT trip is released. However, the inverter stays in OFF mode and does not restart the operation instantly.
PRT-96 LDT Rst Cnt PRT-97 LDT Rst Cnt M PRT-98 LDT Cnt Clr T	When the LDT trip occurs, the number of automatic restart is set by PRT-96. If an LDT trip occurs, the inverter automatically restarts after the time set in PRT-77 (LDT Restart DT) has elapsed. The PRT-97 is incremented by 1 each time it is automatically restarted. When the value of PRT-97 becomes equal to PRT-96, it does not try to restart automatically. The LDT trip will be restarted within the time set in PRT-98 after auto restart If not, PRT-97 is initialized to 0.
OUT-31–35 Relay 1–5	Sets one of the output relays to '32 (LDT)' to monitor the level detection status.

www.nicsanat.com
021-87700210
NIC SANAT
نیک صنعت

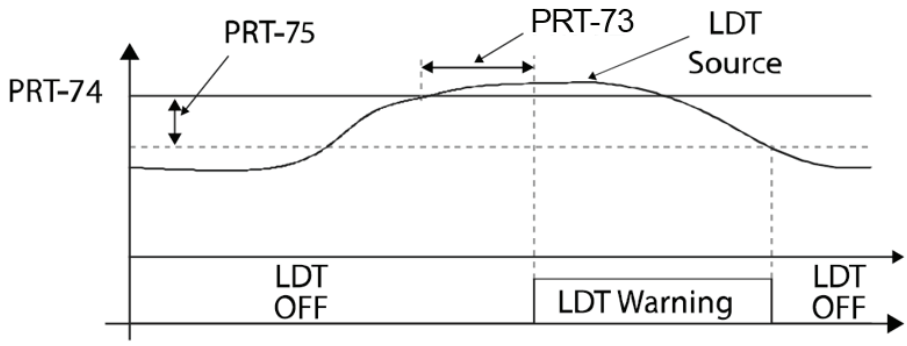

<An example of PRT-71 set to (1: Above Level)>

As shown in the figure above, level detection can be carried out (relay output is 'on') as the output frequency is above PRT-76 and the detection value is greater than the value of PRT-74. The LDT operation is released if the value is less than the value subtracted from the value of band of, when the value of the feedback is set from PRT-74 to PRT-75.

Caution

- The LDT operation is carried out if the inverter operation is above PRT-74.
- Modify PRT-74 and PRT-75 appropriately when modifying LDT Source of PRT-71.
- PRT-74 and PRT-75 become default value if the LDT Source is modified.
- PRT-77 (Restart DT) and PRT-08 (RST restart) features operate separately.
- The inverter waits until the delay time set at PRT-73 (LDT Dly Time) before it operates based on the setting in LDT-70 when the level detection time condition is met.

5.19 Pipe Break Detection

This function detects Pipe Breaks while the PID operation is on. The fault trip or a warning signal will occur if the feedback does not reach the level set by users during the operation with the maximum output (PID maximum output or the maximum speed set).

Group	Code	Name	LCD Display	Parameter Setting	Setting Range		Unit
PRT	60	Pipe Break Detection setting	PipeBroken Sel	0	0	None	
					1	Warning	
					2	Free-Run	

					3 Dec	
	61	Pipe Break Detection variation	PipeBroken Dev	97.5	0–100	%
	62	Pipe Break Detection time	PipeBroken DT	10.0	0–6000.0	Sec
OUT	31–36	Relay output 1–5	Relay1–5	28	Pipe Broken	-

Pipe Break Detection Details

PRT-60 PipeBroken Sel	Select the operation while detecting Pipe Breaks Setting / Function 0 None — No operation 1 Warning — The inverter displays a warning message. 2 Free-Run — The inverter free-runs, then stops. 3 Dec — The inverter decelerates, then stops.
PRT-61 PipeBroken Dev	Sets the Pipe Break Detection level. Set the detect level by multiplying the set value for PRT-61 by PID Reference.
PRT-62 PipeBroken DT	Sets the detect delay time. Pipe Break operates if the Pipe Break situation is maintained for a set amount of time.
OUT31–36 Define	If Pipe Break (28) is set, when a Pipe Break occurs, the inverter sends out output with Relay.

www.nicsanat.com
021-87700210
NIC SANAT
نیک صنعت

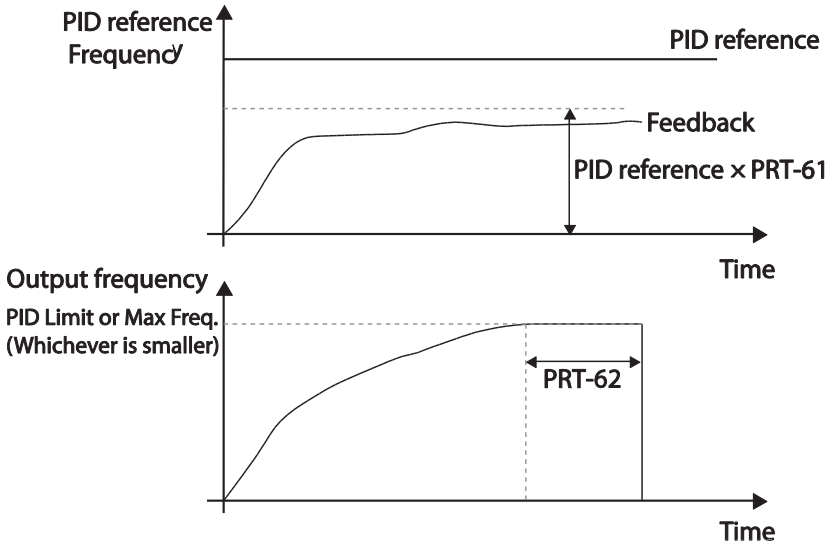

www.nicsanat.com
021-87700210
NIC SANAT
نیک صنعت

In the graph above, Pipe Break occurs if the feedback is smaller than the value calculated by multiplying the two values set at PID-04 and PRT-61(PID-04 x PRT-61) at the inverter's maximum output (when PID output is the maximum set value, or the inverter is running at the frequency set at DRV-20).

5.20 Pre-heating Function

This function uses current to heat up the motor or pump to avoid the motor or the pump freezing when they are not in operation.

Group	Code	Name	LCD Display	Parameter Setting	Setting Range	Unit
AP2	48	Initial heating output current	Pre Heat Level	20	1–100	%
	49	Initial heating output duty	Pre Heat Duty	30	1–100	%
	50	DC input delay time	DC Inj Delay T	60.0	0.0–600.0	sec
IN	65–71	Terminal block input 1–7	P1–7 Define	44	Pre Heat	-

Initial Heating Setting Details

Code	Description
AP2-48 Pre Heat Curr	Sets the current to be used for initial heating. Sets the current to motor no-load current % value.
AP2-49 Pre Heat Duty	Sets the duty (time) for the current to be used for initial heating, from 10 seconds to % value.
AP2-50 DC Inj Delay T	Sets a certain delay time to prevent from an over current trip that may occur when a DC input is performed after the inverter Free-Run stop.
IN-65–71 P1–7 Define	Performs the Pre Heat function if the Pre Heat (44) terminal is set.

The initial heating function continually operates when the set multi-function input terminal is on and until the inverter command is on. If an inverter command is input while the initial heating function is operating, the inverter starts operation immediately.

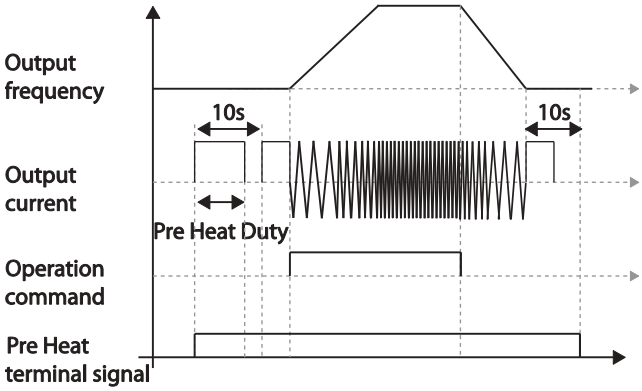

The initial heating operation starts to run after an inverter operation stops, when the initial heating function's terminal input is on after the inverter operation command is off.

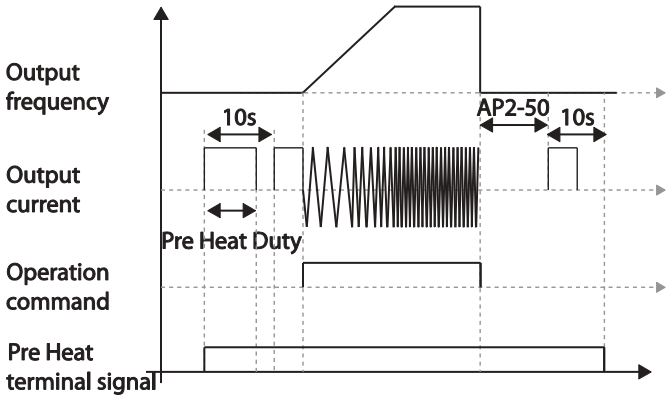

Caution

- If the value for AP2-48 Pre Heat Curr is above the rated motor current value, it is limited by the rated motor current value.
- If the value for AP2-48 Pre Heat Curr is too high or the DC current output time is too long, the motor may overheat or be damaged and the Inver IOLT may also malfunction. Reduce the DC output current amount and DC output time to prevent from such damages.

The diagram above shows the operation waveform related to AP2-50 DC Inj Delay T. The Pre Heat function performs when the inverter stop mode is set to Free Run and the Pre Heat signal is supplied. Then, if the inverter operation command is on, the inverter maintains acceleration and a fixed frequency. If the inverter operation command is off, the motor is in Free Run and the Pre Heat operations starts after the time amount set in AP2-50.

www.nicsanat.com
021-87700210
NIC SANAT
نیک صنعت

5.21 Auto Tuning

The motor parameters can be measured automatically and can be used for an auto torque boost.

Example - Auto Tuning Based on 5.5 kW, 200 V Motor

DRV	14	Motor capacity	Motor Capacity	9	5.5 kW	7–20	-
BAS	11	Motor pole number	Pole Number	4		2–48	-
	12	Rated slip speed	Rated Slip	45		0–3000	Rpm
	13	Rated motor current	Rated Curr	21.0		1.0–1000.0	A
	14	Motor no-load current	Noload curr	7.1		0.5–1000.0	A
	15	Motor rated voltage	Rated Volt	220		170–500	V
	16	Motor efficiency	Efficiency	85		70–100	%
	20	Auto tuning	Auto Tuning	0	None	-	-
	21	Stator resistance	Rs	0.314		Depends on the motor setting	Ω
	22	Leakage inductance	Lsigma	3.19		Depends on the motor setting	mH

www.nicsanat.com
021-87700210
NIC SANAT
نیک صنعت

Auto Tuning Default Parameter Setting

Motor Capacity (kW)		Rated Current (A)	No-load Current (A)	Rated Slip Frequency (Hz)	Stator Resistance (Ω)	Leakage Inductance (mH)
200 V	0.75	3.4	1.7	3.00	2.60	17.94
	1.5	6.4	2.6	2.67	1.17	2.29
	2.2	8.6	3.3	2.3	0.84	6.63
	3.7	13.8	5.0	2.3	0.50	4.48
	5.5	21.0	7.1	1.50	0.314	3.19
	7.5	28.2	9.3	1.33	0.169	2.844
	11	40.0	12.4	1.00	0.120	1.488
	15	53.6	15.5	1.00	0.084	1.118
	18.5	65.6	19.0	1.00	0.0676	0.819
400 V	0.75	2.0	1.0	3.00	7.81	53.9
	1.5	3.7	1.5	2.67	3.52	27.9
	2.2	5.0	1.9	2.3	2.52	19.95
	3.7	8.0	2.9	2.3	1.50	13.45
	5.5	12.1	4.1	1.50	0.940	9.62
	7.5	16.3	5.4	1.33	0.520	8.53
	11	23.2	7.2	1.00	0.360	4.48
	15	31.0	9.0	1.00	0.250	3.38
	18.5	38.0	11.0	1.00	0.168	2.457
	22	44.5	12.5	1.00	0.168	2.844
	30	60.5	16.9	1.00	0.1266	2.133
	37	74.4	20.1	1.00	0.1014	1.704
	45	90.3	24.4	1.00	0.0843	1.422
	55	106.6	28.8	1.00	0.0693	1.167
	75	141.6	35.4	1.00	0.0507	0.852
	90	167.6	41.9	1.00	0.0399	0.715

Motor Capacity (kW)		Rated Current (A)	No-load Current (A)	Rated Slip Frequency (Hz)	Stator Resistance (Ω)	Leakage Inductance (mH)
400 V	110	203.5	48.8	1.00	0.0326	0.585
	132	242.3	58.1	1.00	0.0272	0.488
	160	290.5	69.7	1.00	0.0224	0.403
	185	335.0	77.0	1.00	0.0210	0.380
	220	405.0	93.1	1.00	0.1630	2.930
	250	467.8	104.9	1.00	0.1455	2.615
	315	604.0	132.8	1.00	0.1140	2.040
	355	687.8	146.4	1.00	0.1020	1.820
	400	782.0	161.2	1.00	0.0906	1.616
	500	985.3	206.2	1.00	0.0700	1.330

Auto Tuning Parameter Setting Details

<table>
<tr><th>Code</th><th>Description</th></tr>
<tr><td>DRV-14 Motor Capacity</td><td>Sets the motor capacity to be used. The maximum motor capacity is limited by the inverter capacity and the keypad only displays the inverter capacity.</td></tr>
<tr><td>BAS-20 Auto Tuning</td><td>Select an auto tuning type and run it. Select one of the options and then press the [ENT] key to run the auto tuning.
<table>
<tr><th colspan="2">Setting</th><th>Function</th></tr>
<tr><td>0</td><td>None</td><td>Auto tuning function is disabled. Also, if you select one of the auto tuning options and run it, the parameter value will revert back to '0' when the auto tuning is complete.</td></tr>
<tr><td>1</td><td>All (rotating type)</td><td>Measures all motor parameters while the motor is rotating, including stator resistance (Rs), no-load current (Noload Curr), rotor time constant (Tr), etc. Since the motor is rotating while the parameters are being measured, if the load is connected to the motor spindle, the parameters may not be measured accurately. For accurate measurements, remove the load attached to the motor spindle.</td></tr>
</table></td></tr>
</table>

Code	Description		
			Note that the rotor time constant (Tr) must be measured in a stopped position.
	2	All (static type)	Measures all parameters while the motor is in the stopped position, including stator resistance (Rs), no-load current (Noload Curr), rotor time constant (Tr), etc. Since the motor is not rotating while the parameters are measured, the measurements are not affected when the load is connected to the motor spindle. However, when measuring parameters, do not rotate the motor spindle on the load side.
BAS-14 Noload Curr, BAS-21 Rs–BAS-24 Tr	Displays motor parameters measured by auto tuning. For parameters that are not included in the auto tuning measurement list, the default setting will be displayed.		

Caution

- Perform auto tuning ONLY after the motor has completely stopped running.
- Auto tuning operates when the inverter's auto mode is off.
- Before you run auto tuning, check the motor pole number, rated slip, rated current, rated voltage, and efficiency on the motor's rating plate and enter the data. The default parameter setting is used for values that are not entered.
- When measuring all parameters after selecting 2 (All-static type) at BAS-20: compared with rotation type auto tuning where parameters are measured while the motor is rotating, parameter values measured with static auto tuning may be less accurate. Inaccuracy of the measured parameters may degrade the performance of operations. Therefore, run static-type auto tuning by selecting 2 (All) only when the motor cannot be rotated (when gearing and belts cannot be separated easily, or when the motor cannot be separated mechanically from the load).
- If auto tuning operates without wiring the motor, 'Rs Tune Err' or 'Lsig Tune Err' warning messages are displayed. It can be reset if you press 'STOP/RESET' button of the keypad.

5.22 Time Event Scheduling

Time Event function enables the user to operate the inverter using the RTC (Real-Time Clock) feature at certain times that the user would like to set. An RTC battery is installed on the I/O board of the H100 inverter, and it lasts approximately 25,800 hours with the inverter turned off, and 53,300 hours with the inverter turned on.

To use the Time Event, set the current date and time. Three parameters need to be set to configure the Time event feature: Time Period Module, Time Event, and Exception Date.

Time Period	Description
Time Period	Used to set the time of operation.
Time Event	Used to set the time of operation.
Exception Date	Used to specify the exception date. Exception date has the highest priority.

4 Time period Module types, 8 Time Event Module types, and 8 Exception day types can be used to configure time events. The Time Event function works based on a series of configuration using the modules listed in the table above.

Group	Code	Name	LCD Display	Parameter Setting	Setting Range	Unit
AP3	01	Current date	Now Date	01/01/2000	01/01/2000 ~ 12/31/2099 (Date)	Hz
	02	Current time	Now Time	0: 00	0: 00–23: 59	Sec
	03	Current day of the week	Now Weekday	0000001	0000000–1111111	-
	04	Summer Time Start date	Summer T Start	04/01	01/01 ~ Summer T Stop	Day
	05	Summer Time Finish date	Summer T Stop	11/31	Summer T Start ~ 12/31(Date)	Day
	10	Period connection status	Period Status	-	-	-
	11	Time Period 1 Start time	Period1 StartT	24: 00	00:00 ~ 24:00	Min
	12	Time Period 1 End time	Period1 Stop T	24: 00	Period1 StartT ~ 24:00(Min)	Min
	13	Time Period 1 Day of the week	Period1 Day	0000000	0000000~1111111	-
	14	Time Period 2	Period2	24: 00	00:00 ~ 24:00	Min

Group	Code	Name	LCD Display	Parameter Setting	Setting Range	Unit
		Start time	StartT			
	15	Time Period 2 End time	Period2 Stop T	24: 00	Period2 StartT ~ 24:00(Min)	Min
	16	Time Period 2 Day of the week	Period2 Day	00000000	0000000~1111111	-
	17	Time Period 3 Start time configuration	Period3 StartT	24: 00	00:00 ~ 24:00	Min
	18	Time Period 3 End time	Period3 Stop T	24: 00	Period3 StartT ~ 24:00(Min)	Min
	19	Time Period 3 Day of the week	Period3 Day	0000000	0000000~1111111	-
	20	Time Period 4 Start time	Period4 StartT	24: 00	00:00 ~ 24:00	Min
	21	Time Period 4 End time	Period4 Stop T	24: 00	Period4 StartT ~ 24:00(Min)	Min
	22	Time Period 4 Day of the week	Period4 Day	0000000	0000000~1111111	-
	30	Except1 Date Start time	Except1 StartT	24: 00	00:00 ~ 24:00	Min
	31	Except1 Date End time	Except1 Stop T	24: 00	Except1 StartT ~ 24:00(Min)	Min
	32	Except1 Date	Except1 Date	01/01	01/01–12/31	Day
	33-53	Exception Date 2–Exception Date 8 Parameter (The same condition and setting as Exception Date 1)				
	70	Time Event functions	Time Event En	0: No	0 No 1 Yes	
	71	Time Event configuration status	T-Event Status	-	-	
	72	Time Event 1 Connection	T-Event1Period	000000000000	000000000000 ~111111111111	

Group	Code	Name	LCD Display	Parameter Setting	Setting Range		Unit
	73	Time Event 1 functions	T-Event1Define	0: None	0	None	
					1	Fx	
					2	Rx	
					3	Speed-L	
					4	Speed-M	
					5	Speed-H	
					7	Xcel-L	
					8	Xcel-M	
					9	Xcel-H	
					10	Xcel Stop	
					11	Run Enable	
					12	2nd Source	
					13	Exchange	
					14	Analog Hold	
					15	I-Term Clear	
					16	PID Openloop	
					17	PID Gain 2	
					18	PID Ref Change	
					19	2nd Motor	
					20	Timer In	
					21	Dias Aux Ref	
					22	EPID1 Run	
					23	EPID1 ITerm Clr	
					24	Pre Heat	
					25	EPID2 Run	
					26	EPID2 iTerm Clr	

Group	Code	Name	LCD Display	Parameter Setting	Setting Range		Unit
					27	Sleep Wake Chg	
					28	PID Step Ref L	
					29	PID Step Ref M	
					30	PID Step Ref H	
	74–87	Time Event 2–Time Event 8 Parameter (The same setting range and initial value as Time Event 1)					

Time Event Function Setting Details

Code	Description
AP3-01 Now Date AP3-02 Now Time AP3-03 Now Weekday	Sets the current date, time, and day of the week. The Time Event function is based on the setting. When the user sets the summer time start date, the current time is subtracted by one hour. ex) [AP3-04 Summer T Start] is set to April 1, and if it is 1:59 on April 1, it will not be 2:00 a minute later and it will be 1:00 on April 1. If [AP3-05 Summer T Stop] is set to December 25th, then it will be 1:59 on December 25th, and it will be 3:00 on December 25 instead of 2:00 a minute later. Summer time is different for each country. The parameter is based on 2 o'clock. If there is no charge on the RTC battery, it is initialized to 00:00 on January 1, 2000 when the inverter power is off / on.
AP3-04 Summer T Start AP3-05 Summer T Stop	Set the Summer time start and finish date.
AP3-06 Date format	Select the desired date format. Configuration / Function 0 YYYY/MM/DD — Year/Month/Day is displayed. 1 MM/DD/YYYY — Month/Day/Year is displayed (USA). 2 DD/MM/YYYY — The format of Day/Month/Year is displayed (Europe).
AP3-10 Period Status	Bits 0–3 are used to indicate the time module that is currently in use among the 4 different time modules set at AP3-11–AP3-22. Bits 4–11 are used to indicate the exception day that is set at AP3-30–AP3-53.

<table>
<tr><th>Code</th><th>Description</th></tr>
<tr><td>AP3-11–AP3-20 Period 1–4 Start T</td><td>The start time for the 4 time periods can be set up to 4.</td></tr>
<tr><td>AP3-12–AP3-21 Period 1–4 Stop T</td><td>The end time for the 4 time periods can be set up to 4.</td></tr>
<tr><td>AP3-13–AP3-22 Period 1~4 Day</td><td>The Time period date for the operation can be set up to 4. It can be set on a weekly basis. If the bit is '1 (on)', it indicates the relevant day is selected. If the Bit is '0 (off)', it indicates the relevant day is not selected.
<table>
<tr><td colspan="7">Bit</td></tr>
<tr><td>6</td><td>5</td><td>4</td><td>3</td><td>2</td><td>1</td><td>0</td></tr>
<tr><td>Sunday</td><td>Monday</td><td>Tuesday</td><td>Wednesday</td><td>Thursday</td><td>Friday</td><td>Saturday</td></tr>
</table></td></tr>
<tr><td>AP3-30–AP3-51 Exception1–8 Start T</td><td>The operation start time for the 8 Exception days can be set.</td></tr>
<tr><td>AP3-31–AP3-52 Exception1–8 Stop T</td><td>The operation end time for the 8 Exception days can be set.</td></tr>
<tr><td>AP3-32–AP3-53 Exception1–8 Date</td><td>The date for the 8 Exception days can be set.</td></tr>
<tr><td>AP3-70 Time Event En</td><td>Enables or disables the Time Event
<table>
<tr><td colspan="2">Setting</td><td>Function</td></tr>
<tr><td>0</td><td>No</td><td>Time Event is not used.</td></tr>
<tr><td>1</td><td>Yes</td><td>Time Event is used.</td></tr>
</table></td></tr>
<tr><td>AP3-71 T-Event Status</td><td>It shows which T-Event from 1–8 is being performed.
<table>
<tr><td>7</td><td>6</td><td>5</td><td>4</td><td>3</td><td>2</td><td>1</td><td>0</td></tr>
<tr><td>T-Event 8</td><td>T-Event 7</td><td>T-Event 6</td><td>T-Event 5</td><td>T-Event 4</td><td>T-Event 3</td><td>T-Event 2</td><td>T-Event 1</td></tr>
</table></td></tr>
<tr><td>AP3-72–86 T-Event1–8 Period</td><td>Select the desired module of the Time Module and Exception Day set in AP3-11–AP3-53 for the relevant events.
If the bit is 1, it indicates the relevant Time Module or Exception Day is selected. If the Bit is 0, it indicates the Time Module or Exception Day is not selected.
<table>
<tr><td colspan="12">bit</td></tr>
<tr><td>11</td><td>10</td><td>9</td><td>8</td><td>7</td><td>6</td><td>5</td><td>4</td><td>3</td><td>2</td><td>1</td><td>0</td></tr>
<tr><td>Exception Date 8</td><td>Exception Date 7</td><td>Exception Date 6</td><td>Exception Date 5</td><td>Exception Date 4</td><td>Exception Date 3</td><td>Exception Date 2</td><td>Exception Date 1</td><td>Period 4</td><td>Period 3</td><td>Period 2</td><td>Period 1</td></tr>
</table></td></tr>
</table>

Code	Description
AP3-73–87 T-Event1–8 Define	Select the desired Event.

Setting			
0	None	16	PID Openloop
1	Fx	17	PID Gain 2
2	Rx	18	PID Ref Change
3	Speed-L	19	2nd Motor
4	Speed-M	20	Timer In
5	Speed-H	21	Dias Aux Ref
6	Xcel-L	22	EPID1 Run
7	Xcel-M	23	EPID1 Openloop
8	Xcel-H	24	Pre Heat
9	Xcel Stop	25	EPID2 Run
10	Run Enable	26	EPID2 Openloop
11	2nd Source	27	Sleep Wake Chg
12	Exchange	28	PID Step Ref L
13	Analog Hold	29	PID Step Ref M
14	I-Term Clear	30	PID Step Ref H
15	None		

Time Period Parameter Setting

There are 4 Time Period Sets in the Time Event. Each Time Period Set has: period 1–4 Start (Start time), Period 1–4 Stop T (End time), and Period 1–4 Day (Operation day) for which they can be set.

Time Period	Schedule
Time Period 1	Every Sunday, Monday, Wednesday, Thursday, and Friday at 06: 00 (On) and 18: 00 (Off)

Time Schedule		
Code	Function	Setting
AP3-11	Period1 StartT	06: 00
AP3-12	Period1 StopT	18: 00

	AP3-13	Period1 Day	1101110
Time Period 2	Every Sunday and Saturday for 24 hours (On)		
	Time Schedule		
	Code	Function	Setting
	AP3-14	Period2 StartT	00: 00
	AP3-15	Period2 StopT	24: 00
	AP3-16	Period2 Day	1000001
Time Period 3	Every Sunday, Thursday, Friday, and Saturday at 10: 00 (On) and 14: 00 (Off)		
	Time Schedule		
	Code	Function	Setting
	AP3-17	Period3 StartT	10: 00
	AP3-18	Period3 StopT	14: 00
	AP3-19	Period3 Day	1000111

The tables below show the parameter values for Time Period 1, Time Period 2, and Time Period 3. When the parameters are set for the Time Periods 1-3 as shown in the tables below, this indicates the Time Event function turns on and off on the following days and time.

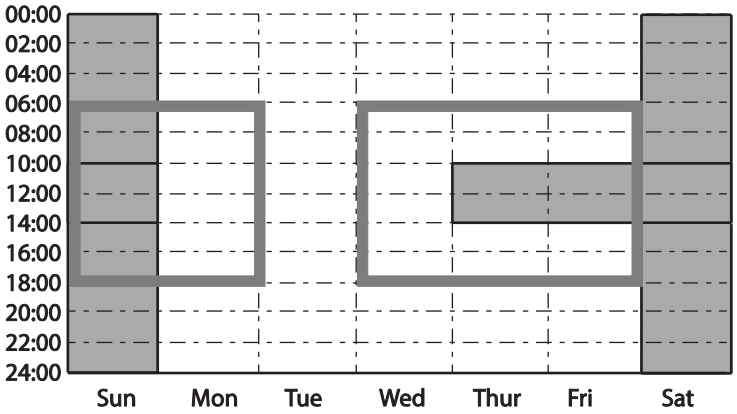

<Time Period setting Time Chart>

Parameters Setting for Exception Date

There are 8 Exception date modules in the Time Event function. They are used to specify the operation on particular days (public holidays, etc.). The settings for the start time and the end time are the same as the settings for the modules and can be set for particular days. The Exception

dates can be set redundantly with the Time periods. If the Time Periods and the Exception Dates are set redundantly, the inverter operates on the Exception Dates set.

Title	Setting Range	Description
Except1–8 StartT	00: 00–24: 00	Hour: Minutes (by the minute)
Except1–8 StopT	00: 00–24: 00	Hour: Minutes
Except1–8 Date	1/1–12/31	Select the particular date (between 1/1 and 12/31)

Time Period	Schedule
Exception Date 1	Every Sunday, Monday, Wednesday, Thursday, and Friday at 06: 00 (On) and 18: 00 (Off) Time Schedule Code / Function / Setting AP3-30 / Except1 StartT / 06: 00 AP3-31 / Except1 StopT / 18: 00 AP3-32 / Except1 Day / 12/25
Exception Date 2	Every Sunday and Saturday for 24 hours (On) Time Schedule Code / Function / Setting AP3-33 / Except2 StartT / 00: 00 AP3-34 / Except2 StopT / 24: 00 AP3-35 / Except2 Day / 01/01
Exception Date 3	Every Sunday, Thursday, Friday, and Saturday at 10: 00 (On) and 14: 00 (Off) Time Schedule Code / Function / Setting AP3-36 / Except3 StartT / 10: 00 AP3-37 / Except3 StopT / 14: 00 AP3-38 / Except3 Day / 01/01

Title	Setting Range	Remarks
Except1–8 StartT	00: 00–24: 00	Hour: Minutes (by the minute)
Except1–8 StopT	00: 00–24: 00	Hour: Minutes
Except1–8 Date	1/1–12/31	Select the particular date (between 1/1 and 12/31)

<The Time Chart for the Exception Day>

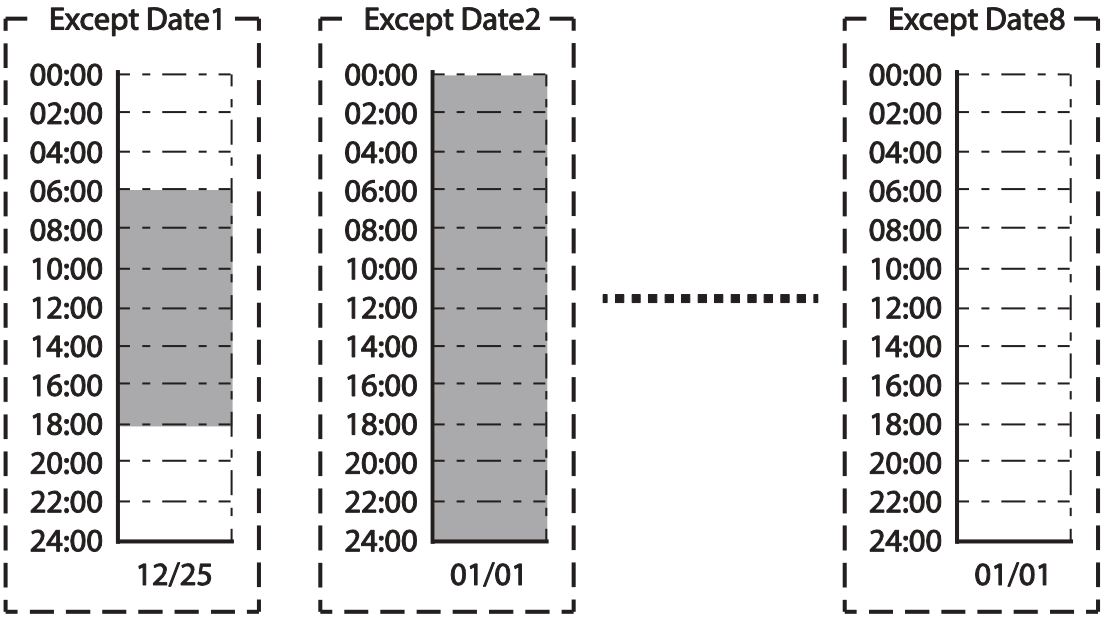

www.nicsanat.com
021-87700210
NIC SANAT
نیک صنعت

The connection settings for Time Period and Time Event

There are 8 Time event modules in the Time Event function. The parameters for T-Events 1–8 are used to set the connections to each module for the Time Period and the Exception Date. The parameters for T-Event 1–8 are used to specify the operation on particular days. Each Time event module can be set for the connections to 4 Time period modules and 8 Exception days. Time event modules are set as a bit unit in the parameters for Events 1–8. The diagram below shows the connections between the Time event modules and the time period modules. The Time Event 1 is connected to Tim[redacted]d 4. The Time Event 8 is connected to Time Periods 1–4 and the Exception Dates 2. [redacted]

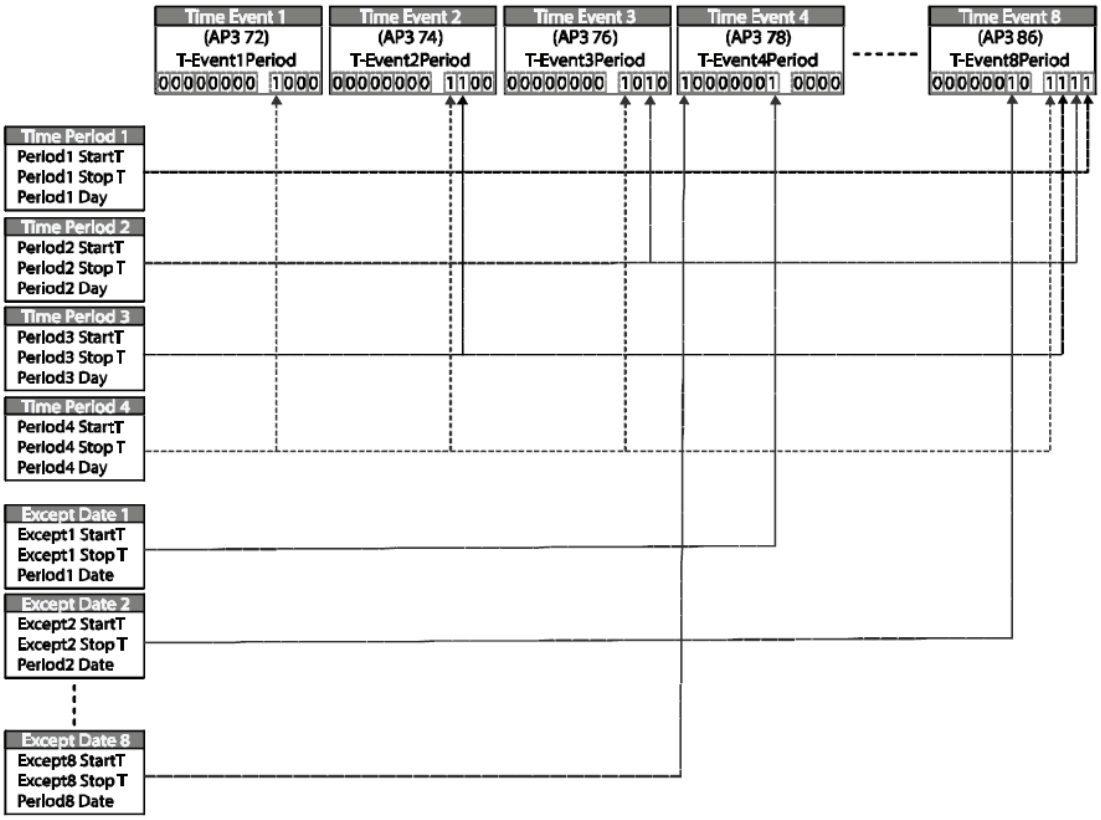

Time Event Module Function Settings

The functions to be performed in the Time Event for T-Events 1–8 can be set. 30 functions can be set (refer to page 228). There are 8 Time event modules in the Time Event. The parameters for T-Events 1–8 are used to set the connections to each module for the Time Period and the Exception Date. The parameters for T-Events 1–8 are used to specify the operation on particular days.

Example of the Time Event operations

If the Time events are set as the parameters below, the inverter operates as illustrated.

Group	Code	Name	LCD Display	Parameter Setting	Setting Range		Unit
DRV	06	Command Source	Cmd Ref Src	5: Time Event	0–9		-
	07	Frequency command source	Freq Ref Src	0: KeyPad	0–11		-
AP3	11	Time Period 1 Start time	Period1 StartT	10: 00	00: 00–24: 00		Min
	12	Time Period 1 End time	Period1 Stop T	20: 00	00: 00–24: 00		Min
	13	Time Period 1 Day of the week	Period1 Day	0110000	0000000–1111111		
	14	Time Period 2 Start time	Period2 StartT	12: 00	00: 00–24: 00		Min
	15	Time Period 2 End time	Period2 Stop T	17: 00	00: 00–24: 00		Min
	16	Time Period 2 Day of the week	Period2 Day	00100000	0000000–1111111		-
	70	Time Event configuration	Time Event En	1: YES	0	No	-
					1	Yes	
	72	Time Event 1 connection configuration	T-Event1Period	00000000001	000000000001–111111111111		
	73	Time Event 1 functions	T-Event1Define	1: Fx	0	None	
					1	Fx	
					2	Rx	
					3	Speed-L	
					4	Speed-M	
					5	Speed-H	

					7	Xcel-L	
					8	Xcel-M	
					9	Xcel-H	
					10	Xcel Stop	
					11	Run Enable	
					12	2nd Source	
					13	Exchange	
					14	Analog Hold	
					15	I-Term Clear	
					16	PID Openloop	
					17	PID Gain 2	
					18	PID Ref Change	
					19	2nd Motor	
					20	Timer In	
					21	Dias Aux Ref	
					22	EPID1 Run	
					23	EPID1 ITerm Clr	
					24	Pre Heat	
					25	EPID2 Run	
					26	EPID2 ITerm Clr	
					27	Sleep Wake Chg	
					28	PID Step Ref L	
					29	PID Step Ref M	
					30	PID Step Ref H	

	74	Time Event 2 connection	T-Event1Period	00000000010	000000000001–111111111111	
	75	Time Event 2 functions	T-Event2Define	3: Speed-L	Refer to AP3-73	

The parameters in the table above shows the frequency command sources for the keypad and the operation command sources for the Time Event.

The following is an example of an inverter operation utilizing the Time Period modules 1 and 2 with Time Events 1 and 2:

Time Period 1 is used to operate the inverter on Mondays and Tuesdays from 10AM to 8PM. Time Period 2 is used to operate the inverter on Tuesday from 12PM to 5PM.

Time Event 1 triggers forward operations based on the frequency input on the keypad and continues the operation for the time set at Time Period module 1. Time Event 2 operates the inverter at Speed-L for the time set at Time Period module 2.

On Mondays, the inverter operates in the forward direction based on the frequency input on the keypad from 10AM to 8PM (Time Event 1). On Tuesdays, it operates again in the forward direction based on the keypad frequency input from 10AM to 12PM (Time Event 1), and then operates at Speed-L from 12PM to 5PM (Time Event 2). When the operation assigned by Time Event 2 is complete, the inverter resumes its Time Event 1 operation (the inverter operates based on the keypad frequency input from 5PM to 8PM).

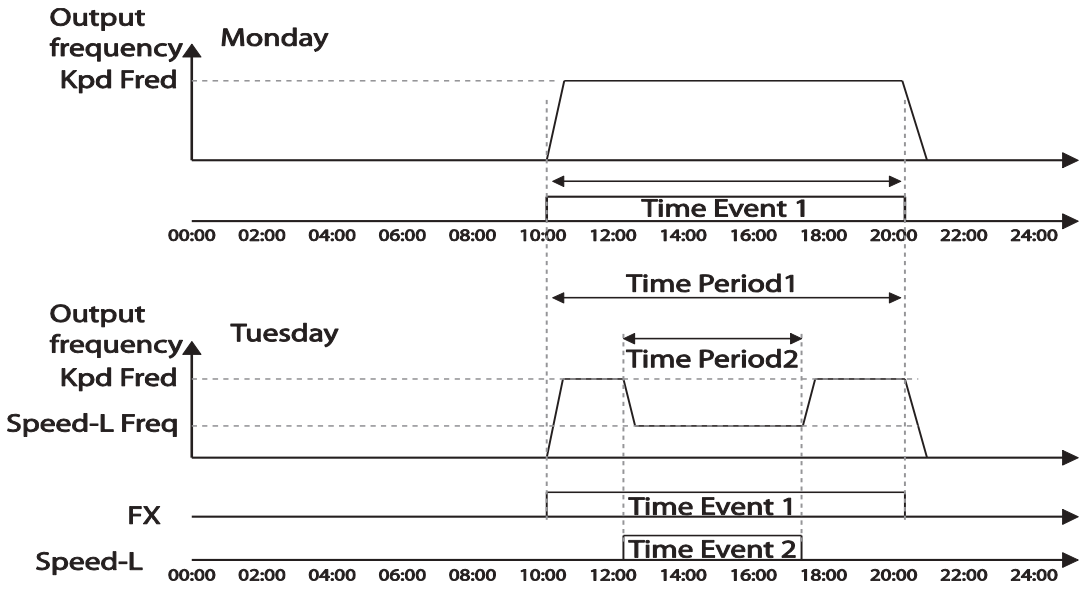

<An example of Time Event>

Note

When repetitive frequency commands related to the frequency input command occur while the Time Event function is performing, Time Event performs its function in the order of the frequency command sources set in Freq Ref Src for DRV-07 (followed by Jog operation and multi-step acc/dec).

Caution

If a fault trip occurs during a time event operation, the inverter stops the operation and stays in a trip state. When this happens, there are two options to resume the stopped operation:

- Set PRT-08 (RST Restart) to 'YES' to allow the inverter to automatically restart after the trip condition is released.
- Refresh the setting at AP3-70 (Time Event En). Set AP3-70 to 'Yes' from 'No'. If one of the input terminals (IN-65~71 Px Define) is assigned to it, turn the switch off then turn it back on to resume the time event operation.

5.23 Kinetic Energy Buffering

When the input power supply is disconnected, the inverter's DC link voltage decreases, and a low voltage trip occurs blocking the output. A kinetic energy buffering operation uses regenerative energy generated by the motor during the blackout to maintain the DC link voltage. This extends the time for a low voltage trip to occur, after an instantaneous power interruption.

Group	Code	Name	LCD Display	Parameter Setting		Setting range	Unit
CON	77	Kinetic energy buffering selection	KEB Select	1	Yes	0–1	-
	78	Kinetic energy buffering start level	KEB Start Lev	130		110–140	%
	79	Kinetic energy buffering stop level	KEB Stop Lev	135		115–145	%
	80	Kinetic energy buffering slip gain	KEB Slip Gain	300		0–20000	-
	81	Kinetic energy buffering P-Gain	KEB P Gain	1000		0–20000	-
	82	Kinetic energy buffering I gain	KEB I Gain	500		1–20000	-
	83	Kinetic energy buffering acceleration time	KEB Acc Time	10.0	0.75~90kW	0.0–600.0	Sec
				30.0	110~500kW		

Kinetic Energy Buffering Operation Setting Details

Code	Description
CON-77 KEB Select	Select the kinetic energy buffering operation when the input power is disconnected.

Setting		Function
0	No	General deceleration is carried out until a low voltage trip occurs.
1	Yes	The inverter power frequency is controlled and the regeneration energy from the motor is charged by the inverter.

Code	Description
CON-78 KEB Start Lev, CON-79 KEB Stop Lev	Sets the start and stop points of the kinetic energy buffering operation. The set values must be based on the low voltage trip level at 100%, and the stop level (CON-79) must be set higher than the start level (CON-78).
CON-80 KEB Slip Gain	Used to prevent malfunctions caused by low voltage from initial kinetic energy buffering occurring due to power interruptions.
CON-81 KEB P Gain	Used to maintain the voltage during the kinetic energy buffering operation. It operates the inverter by modifying the set value to prevent malfunctions caused by low voltage after power interruptions.
CON-82 KEB I Gain	Used to maintain the voltage during the kinetic energy buffering operation. Sets the gain value to maintain the operation until the frequency stops during the kinetic energy buffering operation.
CON-83 KEB Acc Time	Sets the acceleration time for the frequency reference when the inverter's operation becomes normal after the kinetic energy buffering operation.

Note

- The KEB functions may perform differently depending on the size of the loads. The KEB Gains can be set for a better performance.
- If a low voltage trip occurs after a power interruption, it indicates the load inertia and level are high. In such cases, the KEB functions can be performed better by increasing the KEB I Gain and the KEB Slip Gain.
- If motor vibration or torque variation occurs during the KEB function operation after power interruptions, the KEB functions can be performed better by increasing the KEB P Gain or decreasing the KEB I Gain.

Caution

Depending on the duration of instantaneous power interruptions and the amount of load inertia, a low voltage trip may occur even during a kinetic energy buffering operation. Motors may vibrate during kinetic energy buffering operation for some loads, except for variable torque loads (for example, fan or pump loads).

5.24 Anti-hunting Regulation (Resonance Prevention)

This function is used to prevent the hunting of a V/F controlled fan or motor caused by current distortion or oscillation, due to mechanical resonance or other reasons.

Group	Code	Name	LCD Display	Parameter Setting		Setting Range		Unit
CON	13	Enable or disable anti-hunting regulation (resonance prevention)	AHR Sel	1	Yes	0	No	-
						1	Yes	
	14	Anti-hunting regulation P-Gain	AHR P-Gain	1000		0–32767		-
	15	Anti-hunting regulation start frequency	AHR Low Freq	0		0–AHR High Freq		Hz
	16	Anti-hunting regulation end frequency	AHR High Freq	400.00		AHR Low Freq–400.00		Hz
	17	Anti-hunting regulation compensation voltage limit	AHR Limit	2		0–20		%

Anti-hunting Regulation Setting Details

Code	Description
CON-13 AHR Sel	Selects the Anti-hunting regulator operation. Setting: 0 No — Function: Disable anti-hunting regulation. Setting: 1 Yes — Function: Enable anti-hunting regulation.
CON-14 AHR P-Gain	Increasing AHR proportional gain improves responsiveness of the anti-hunting regulation. However, current oscillation may result if AHR proportional gain is set too high.
CON-15 AHR Low Freq CON-16 AHR High Freq	Sets the lower limit frequency (CON-15) and the maxim limit frequency (CON-16) for anti-hunting regulation.

5.25 Fire Mode Operation

This function is used to allow the inverter to ignore minor faults during emergency situations, such as fire, and provides continuous operation to protect other systems, such as ventilating fans. In Fire mode, the inverter continues to operate based on the Fire mode run direction and frequency set at PRT-46 and PRT-47.

PRT	44	Fire mode password	Fire Mode PW	3473	-		-
	45	Fire mode setting	Fire Mode Sel	0: None	0	None	-
					1	Fire Mode	
					2	Test Mode	
	46	Fire mode run direction	Fire Mode Dir	0: Forward	0	Forward	-
					1	Reverse	
	47	Fire mode run frequency	Fire Mode Freq	60.00	0–max Freq		Hz
	48	Fire mode operation count	Fire Mode Cnt	0	-		-
IN	65–75	Digital input configuration	Px Define	40: Fire Mode	0-55		-
OUT	31–35	Digital output configuration	Relay1-5	27: Fire Mode	0-41		-
	36	TR output configuration	Q1 define	27: Fire Mode	0-41		-

When the multi-function terminal configured for Fire mode is turned on, the inverter ignores all other commands and operates in the direction set at PRT-46 (Fire mode run direction) at the speed set at PRT-47 (Fire mode run frequency). In Fire mode, the inverter ignores any faults, other than 'ASHT,''Over Current 1,''Over Voltage,''Ground F,' and continues to operate. If any of the faults that can stop inverter operation occur, the inverter automatically performs a reset restart to continue the operation.

www.nicsanat.com
021-87700210
NIC SANAT
نیک صنعت

Fire Mode Function Setting Details

<table>
<tr><th>Code</th><th>Description</th></tr>
<tr><td>PRT-44 Fire Mode PW</td><td>Fire mode password is 3473.
A password must be created to enable Fire mode. PRT-45 (Fire Mode Sel) can be modified only after the password is entered.</td></tr>
<tr><td>PRT-45 Fire Mode Sel</td><td>Sets the Fire Mode.
<table>
<tr><th colspan="2">Setting</th><th>Function</th></tr>
<tr><td>0</td><td>None</td><td>Fire mode is not used.</td></tr>
<tr><td>1</td><td>Fire Mode</td><td>Normal Fire mode</td></tr>
<tr><td>2</td><td>Test Mode</td><td>Fire mode test mode
In Fire test mode, faults are normally processed.
Using Fire test mode does not increase the count value at PRT-48 (Fire Mode Cnt).</td></tr>
</table></td></tr>
<tr><td>PRT-46 Fire Mode Dir</td><td>Sets the run direction for Fire mode operation.</td></tr>
<tr><td>PRT-47 Fire Mode Freq</td><td>Sets the operation frequency for Fire mode.</td></tr>
<tr><td>PRT-48 Fire Mode Cnt</td><td>Counts the number of the Fire mode operations. The number increases only when PRT-45 (Fire Mode Sel) is set to 'Fire Mode'. The count increases up to 99, then it does not increase any more.</td></tr>
</table>

Caution

- If damper or lubrication operations are set for the inverter, Fire mode operation is performed after the delay times set in the relevant operations.
- Note that Fire mode operation voids the product warranty.
- In Fire mode test mode, the inverter does not ignore the fault trips or perform a reset restart. All the fault trips will be processed normally. Fire mode test mode does not increase the Fire mode count (PRT-48).
- When the Fire mode operation is complete, the inverter stops operating and is turned off.

5.26 Energy Saving Operation

5.26.1 Manual Energy Saving Operation

If the inverter output current is lower than the current set at BAS-14 (Noload Curr), the output voltage must be reduced as low as the level set at ADV-51 (Energy Save). The voltage before the energy saving operation starts will become the base value of the percentage. Manual energy saving operation will not be carried out during acceleration and deceleration.

Group	Code	Name	LCD Display	Parameter Setting		Setting Range		Unit
ADV	50	Energy saving operation	E-Save Mode	1	Manual	0	None	-
						1	Manual	
						2	Auto	
	51	Energy saving amount	Energy Save	30		0–30		%

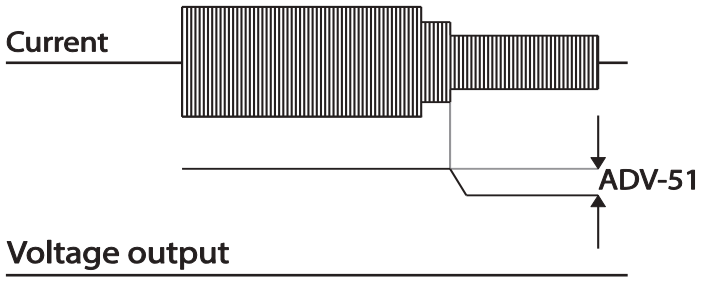

5.26.2 Automatic Energy Saving Operation

The inverter finds the optimal energy saving point for the time set at ADV-52 based on the rated motor current and the voltage output. The Energy saving operation is effective for the normal duty operations. It does operate when the load level is more than 80% of the rated motor current.

Group	Code	Name	LCD Display	Parameter Setting		Setting Range	Unit
ADV	50	Energy saving operation	E-Save Mode	2	Auto	0–2	-

Group	Code	Name	LCD Display	Parameter Setting	Setting Range	Unit
	52	Energy saving point search time	E-Save Det T	20.0	0.0–100.0	Sec

Caution

If the operation frequency is changed, or acceleration or deceleration is carried out during an energy saving operation, the actual Acc/Dec time may take longer than the set time due to the time required to return to general operations from the energy saving operation.

5.27 Speed Search Operation

Speed search operation is used to prevent fault trips that can occur when the inverter voltage output is disconnected and the motor is idling. Since this feature estimates the motor rotation speed based on the inverter output current, it does not give the exact speed.

Group	Code	Name	LCD Display	Parameter Setting		Setting Range	Unit
CON	70	Speed search mode selection	SS Mode	0	Flying Start-1	-	-
	71	Speed search operation selection	Speed Search	0000		-	bit
	72	Speed search reference current	SS Sup-Current	90	0.75~90kW	50–120	%
				80	110~500kW		
	73	Speed search proportional gain	SS P-Gain	100		0–9999	-
	74	Speed search integral gain	SS I-Gain	200		0–9999	-
	75	Output block time before speed search	SS Block Time	1.0		0–60	sec
OUT	31	Multi-function relay 1 item	Relay 1	19	Speed Search	-	-
	33	Multi-function output 1 item	Q1 Define				

<table>
<tr><th>Code</th><th>Description</th></tr>
<tr><td>CON-70 SS Mode</td><td>Select a speed search type.
<table>
<tr><th colspan="2">Setting</th><th>Function</th></tr>
<tr><td>0</td><td>Flying Start-1</td><td>The speed search is carried out as it controls the inverter output current during idling below the CON-72 (SS Sup-Current) parameter setting. If the direction of the idling motor and the direction of operation command at restart are the same, a stable speed search function can be performed at about 10 Hz or lower. However, if the direction of the idling motor and the direction of operation command at restart are different, the speed search does not produce a satisfactory result because the direction of idling cannot be established.</td></tr>
<tr><td>1</td><td>Flying Start-2</td><td>The speed search is carried out as it PI controls the ripple current which is generated by the counter electromotive force during no-load rotation. Because this mode establishes the direction of the idling motor (forward/reverse), the speed search function is stable regardless of the direction of the idling motor and direction of operation command. However because the ripple current is used which is generated by the counter electromotive force at idle (the counter electromotive force is proportional to the idle speed), the idle frequency is not determined accurately and re-acceleration may start from zero speed when the speed search is performed for the idling motor at low speed (about 10 - 15 Hz, though it depends on motor characteristics).</td></tr>
</table></td></tr>
<tr><td>CON-71 Speed Search</td><td>Speed search can be selected from the following 4 options. If the top display segment is on, it is enabled (On). If the bottom segment is on, it is disabled (Off).
<table>
<tr><th>Item</th><th>Bit Setting On Status</th><th>Bit setting Off Status</th></tr>
<tr><td>Keypad</td><td></td><td></td></tr>
</table>
Type and Functions of Speed Search Setting
<table>
<tr><th colspan="4">Setting</th><th rowspan="2">Function</th></tr>
<tr><td>bit4</td><td>bit3</td><td>bit2</td><td>bit1</td></tr>
</table></td></tr>
</table>

			✓	Speed search for general acceleration
		✓		Initialization after a fault trip
	✓			Restart after instantaneous power interruption
✓				Starting with power-on

Speed search for general acceleration: If bit 1 is set to '1' and the inverter operation command runs, acceleration starts with the speed search operation. When the motor is rotating under load, a fault trip may occur if the operation command is run for the inverter to provide voltage output. The speed search function prevents such fault trips from occurring.

Initialization after a fault trip other than an LV trip: If bit 2 is set to '1' and PRT-08 (RST Restart) is set to '1 (Yes)', the speed search operation automatically accelerates the motor to the operation frequency used before the fault trip when the [Reset] key is pressed (or the terminal block is initialized) after a fault trip.

Automatic restart after a power interruption: If bit 3 is set to '1', and if a low voltage trip occurs due to a power interruption but the power is restored before the internal power shuts down, the speed search operation accelerates the motor back to its frequency reference before the low voltage trip.
If an instantaneous power interruption occurs and the input power is disconnected, the inverter generates a low voltage trip and blocks the output. When the input power returns, the operation frequency before the low voltage trip and the voltage is increased by the inverter's inner PI control.
If the current increases above the value set at CON-72, the voltage stops increasing and the frequency decreases (t1 zone). If the current decreases below the value set at CON-27, the voltage increases again and the frequency stops decelerating (t2 zone). When the normal frequency and voltage are resumed, the speed search operation accelerates the motor back to its frequency reference before the fault trip.

www.nicsanat.com
021-87700210
NIC SANAT
نیک صنعت

	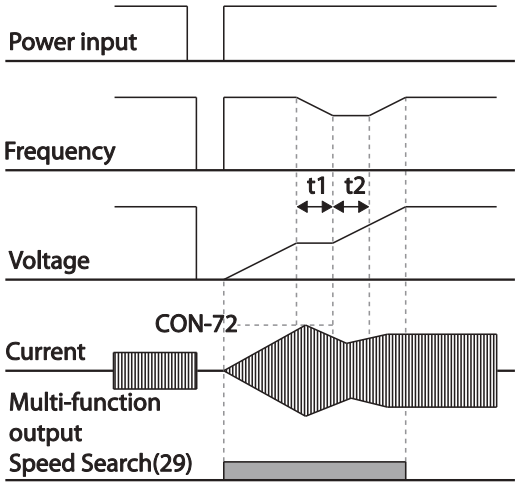 **Starting with power-on:** Set bit 4 to '1' and ADV-10 (Power-on Run) to '1 (Yes)'. If inverter input power is supplied while the inverter operation command is on, the speed search operation will accelerate the motor up to the frequency reference.
CON-72 SS Sup-Current	The amount of current flow is controlled during speed search operation based on the motor's rated current. If CON-70 (SS mode) is set to '1 (Flying Start-2)', this code is not visible.
CON-73 SS P-Gain, CON-74 SS I-Gain	The P/I gain of the speed search controller can be adjusted. If CON-70 (SS Mode) is set to '1(Flying Start-2)', different factory defaults, based on motor capacity, are used and defined in DRV-14 (Motor Capacity).
CON-75 SS Block Time	The block time parameter prevents overvoltage trips due to counter electromotive force.

Note

If operated within the rated output, the H100 series inverter is designed to withstand instantaneous power interruptions within 8 ms and maintain normal operation. The DC voltage inside the inverter may vary depending on the output load. If the power interruption time is longer than 8 ms, a low voltage trip may occur.

Caution

Select the Speed search function (normal acceleration) for a proper re-operation during a free-run. If the speed search function (normal acceleration) is not selected during the acceleration, an over current trip or an overload trip may occur.

Speed Search Operation Setting Details

www.nicsanat.com
021-87700210
NIC SANAT
نیک صنعت

5.28 Auto Restart Settings

When inverter operation stops due to a fault and a fault trip is activated, the inverter automatically restarts based on the parameter settings.

Group	Code	Name	LCD Display	Parameter Setting	Setting Range	Unit
PRT	08	Select start at trip reset	RST Restart	11	-	-
	09	Auto restart count	Retry Number	6	0–10	-
	10	Auto restart delay time	Retry Delay	1.0	0.1–60.0	sec
CON	71	Select speed search operation	Speed Search	-	0000–1111	bit
	72	Speed search startup current	SS Sup-Current	90	70–120	%
	73	Speed search proportional gain	SS P-Gain	100	0–9999	
	74	Speed search integral gain	SS I-Gain	200	0–9999	
	75	Output block time before speed search	SS Block Time	1.0	0.0–60.0	sec

Auto Restart Setting Details

Code	Description
PRT-08 RST Restart	The Reset restart function can be performed by one of the two different types. If the top segment is turned on, it indicates the function is on. If the

Code	Description
	bottom segment is turned on, it indicates the function is off. Type: Bit On / Bit Off LCD Display: **Reset Restart function** Setting: Bit1 / Bit 0; Function Bit1: ✓ — For fault trips other than LV Bit 0: ✓ — For LV fault trips **For fault trips other than LV**: If the Bit 0 is turned on, the inverter restarts after a trip occurs and triggers a reset. **For LV fault trips**: If the Bit 1 is turned on, the inverter restarts after a trip occurs and triggers a reset.
PRT-09 Retry Number, PRT-10 Retry Delay	The number of available auto restarts can be set at PRT-09. If a fault trip occurs during an operation, the inverter restarts after the time set at PRT-10 (Retry Delay). At each restart, the inverter counts the number of tries and subtracts it from the number set at PRT-09 until the retry number count reaches 0. After an auto restart, if a fault trip does not occur within 60 sec, it will increase the restart count number. The maximum count number is limited by the number set at PRT-09. If the inverter stops due to over current or hardware diagnosis, an auto restart is not activated. At auto restart, the acceleration options are identical to those of speed search operation. Codes CON-72–75 can be set based on the load. Information about the speed search function can be found at 5.27 Speed Search Operation on page 243.

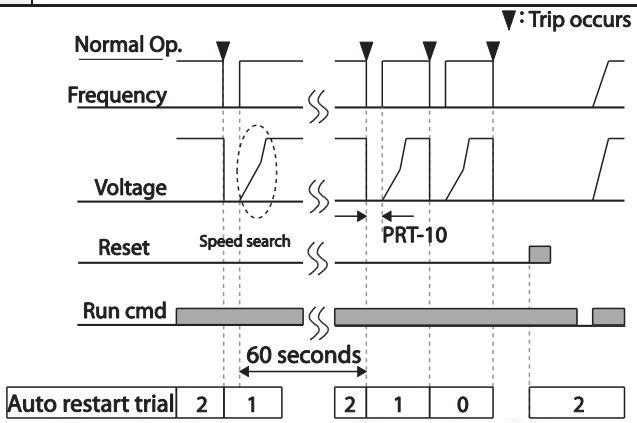

[Example of auto restart with a setting of 2]

Caution

- If the auto restart number is set, be careful when the inverter resets from a fault trip. The motor may automatically start to rotate.
- In HAND mode, auto restart resets the trip condition but it does not restart the inverter operation.
- In AUTO mode,
  - if the auto restart is configured, the inverter restarts after a trip condition is released (command via digital input is used to restart the operation).
  - if the auto restart is not configured and the trip condition is released using the OFF key, or the switches at the terminal input, the inverter stays in the OFF state. Because the command information is reset along with the trip condition, a new command is required to operate the inverter.

5.29 Operational Noise Settings (Carrier Frequency Settings)

Group	Code	Name	LCD Display	Parameter Setting		Setting Range	Unit
CON	04	Carrier Frequency	Carrier Freq	3.0	0.75~90kW	1.0–15.0	kHz
				2.0	110~355kW	1.0~5.0	
				1.5	400/500kW	1.0~4.0	
	05	Switching Mode	PWM* Mode	0	Normal PWM	0–1	-

* PWM: Pulse width modulation

Operational Noise Setting Details

Code	Description
CON-04 Carrier Freq	Adjusts motor operational noise by changing carrier frequency settings. Power transistors (IGBT) in the inverter generate and supply high frequency switching voltage to the motor. The switching speed in this process refers to the carrier frequency. If the carrier frequency is set high, it reduces operational noise from the motor. If the carrier frequency is set low, it increases operational noise from the motor.
CON-05 PWM Mode	The heat loss and leakage current from the inverter can be reduced by changing the load rate option at CON-05 (PWM Mode). Selecting '1 (LowLeakage PWM)' reduces heat loss and leakage current, compared to when '0 (Normal PWM)' is selected. However, it increases the motor noise. Low leakage PWM uses a 2

Code	Description
	phase PWM modulation mode, which helps minimize degradation and reduces switching loss by approximately 30%.

Item	Carrier Frequency	
	1.0 kHz	15 kHz
	LowLeakage PWM	Normal PWM
Motor noise	↑	↓
Heat generation	↓	↑
Leakage current	↓	↑
Leakage current	↓	↑

Note

- **Carrier Frequency at Factory Default Settings:**
  -[redacted].75~90kW : 3 kHz, 110~355kW : 2kHz, 400/500kW : 1.5kHz
- **H100 Series Inverter Derating Standard (Derating):** The over load rate represents an acceptable load amount that exceeds rated load, and is expressed as a ratio based on the rated load and the duration. The overload capacity on the H100 series inverter is 120%/1 min for normal loads. The current rating differs from the load rating, as it also has an ambient temperature limit. For derating specifications refer to *11.8 Inverter Continuous Rated Current Derating* on page *618*.
- Current rating for ambient temperature at normal load operation.

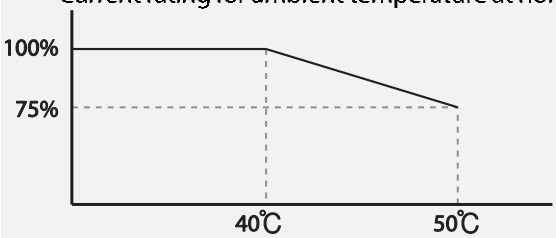

5.30 2nd Motor Operation

The 2nd motor operation is used when a single inverter switch operates two motors. Using the 2nd motor operation, a parameter for the 2nd motor is set. The 2nd motor is operated when a multi-function terminal input, defined as a 2nd motor function, is turned on.

Group	Code	Name	LCD Display	Parameter Setting		Setting Range	Unit
IN	65–71	Px terminal configuration	Px Define (Px: P1–P7)	28	2nd Motor	0-55	-

2nd Motor Operation Setting Details

Code	Description
IN-65–71 Px Define	Set one of the multi-function input terminals (P1–P5) to 26 (2nd Motor) to display the M2 (2nd motor group) group. An input signal to a multi-function terminal set to 2nd motor will operate the motor according to the code settings listed below. However, if the inverter is in operation, input signals to the multi-function terminals will not read as a 2nd motor parameter. PRT-50 (Stall Prevent) must be set first, before M2-28 (M2-Stall Lev) settings can be used. Also, PRT-40 (ETH Trip Sel) must be set first, before M2-29 (M2-ETH 1 min) and M2-30 (M2-ETH Cont) settings.

Parameter Setting at Multi-function Terminal Input on a 2nd Motor

Code	Description	Code	Description
M2-04 Acc Time	Acceleration time	M2-15 M2-Efficiency	Motor efficiency
M2-05 M2-Dec Time	Deceleration time	M2-17 M2-Rs	Stator resistance
M2-06 M2-Capacity	Motor capacity	M2-18 M2-Lsigma	Leakage inductance
M2-07 M2-Base Freq	Motor base frequency	M2-25 M2-V/F Patt	V/F pattern
M2-08 M2-Ctrl Mode	Control mode	M2-26 M2-Fwd Boost	Forward torque boost
M2-10 M2-Pole Num	Pole number	M2-27 M2-Rev Boost	Reverse torque boost
M2-11 M2-Rate Slip	Rated slip	M2-28 M2-Stall Lev	Stall prevention level
M2-12 M2-Rated Curr	Rated current	M2-29 M2-ETH 1 min	Motor heat protection 1 min rating
M2-13 M2-Noload Curr	No-load current	M2-30 M2-ETH Cont	Motor heat protection continuous rating
M2-14 M2-Rated Volt	Motor rated voltage		

Example - 2nd Motor Operation

Use the 2nd motor operation when switching operation between a 7.5 kW motor and a secondary 3.7 kW motor connected to terminal P3. Refer to the following settings.

Group	Code	Name	LCD Display	Parameter Setting		Setting Range	Unit
IN	67	Terminal P3 configuration	P3 Define	26	2nd Motor	-	-
M2	06	Motor capacity	M2-Capacity	-	3.7 kW	-	-
	08	Control mode	M2-Ctrl Mode	0	V/F	-	-

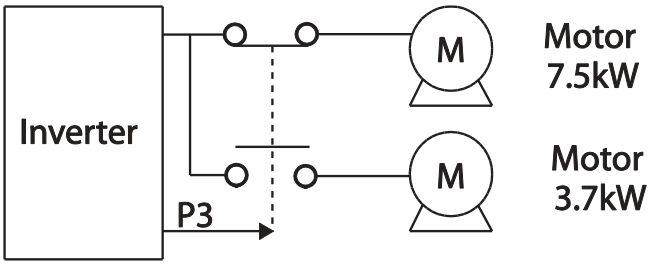

5.31 Supply Power Transition

A supply power transition is used to switch the power source for the motor connected to the inverter from the inverter output power to the main supply power source (commercial power source), or vice versa.

Group	Code	Name	LCD Display	Parameter Setting		Setting Range	Unit
IN	65–71	Px terminal configuration	Px Define (Px: P1–P7)	18	Exchange	0-55	-
OUT	31	Multi-function relay 1 items	Relay1	17	Inverter Line	0-41	-
	33	Multi-function output 1 items	Q1 Define	18	Comm Line	0-41	-

Supply Power Transition Setting Details

Code	Description
IN-65–71 Px Define	When the motor power source changes from inverter output to main supply power, select a terminal to use and set the code value to '18 (Exchange)'. Power will be switched when the selected terminal is on. To reverse the transition, switch off the terminal.
OUT-31 Relay 1– OUT-36 Q1 Define	Set multi-function relay or multi-function output to '17 (Inverter Line)' or '18 (Comm Line)'. The relay operation sequence is as follows. 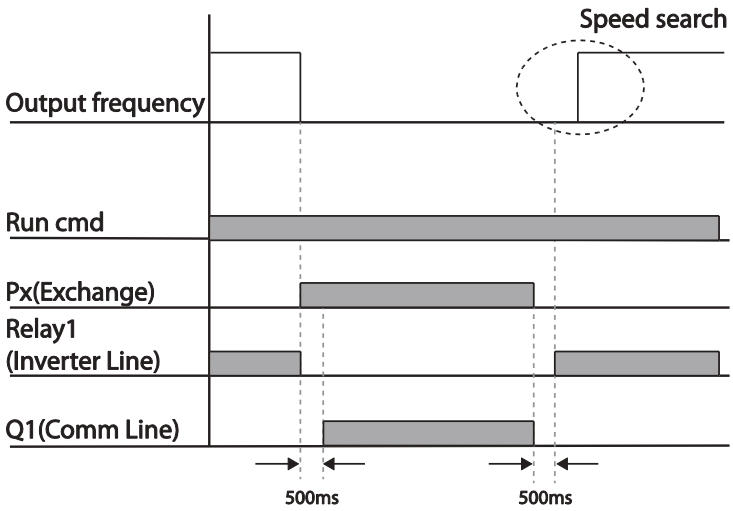

5.32 Cooling Fan Control

This function turns the inverter's heat-sink cooling fan on and off. It is used in situations where the load stops and starts frequently or a noise-free environment is required. The correct use of cooling fan controls can extend the cooling fan's life.

Group	Code	Name	LCD Display	Parameter Setting		Setting Range	Unit
ADV	64	Cooling fan control	Fan Control	0	During Run	0–2	-

Cooling Fan Control Detail Settings

Code	Description		
ADV-64 Fan Control	Settings		Description
	0	During Run	The cooling fan runs when the power is supplied to the inverter and the operation command is on. The cooling fan stops when the power is supplied to the inverter and the operation command is off. When the inverter heat sink temperature is higher than its set value, the cooling fan operates automatically regardless of its operation status.
	1	Always On	Cooling fan runs constantly if the power is supplied to the inverter.
	2	Temp Control	With power connected and the run operation command on: if the setting is in Temp Control, the cooling fan will not operate unless the temperature in the heat sink reaches the set temperature.

Note

Despite setting ADV-64 to '0 (During Run)', if the heat sink temperature reaches a set level by current input harmonic wave or noise, the cooling fan may run as a protective function.

A capacity of 110 kW or more has a small built-in fan installed to cool the internal temperature. The internal fan controls on / off in conjunction with the operation command of the inverter main control fan

5.33 Input Power Frequency and Voltage Settings

Select the frequency for inverter input power. If the frequency changes from 60 Hz to 50 Hz, all other frequency (or RPM) settings, including the maximum frequency, base frequency, etc., will change to 50 Hz. Likewise, changing the input power frequency setting from 50 Hz to 60 Hz will change all related function item settings from 50 Hz to 60 Hz.

Group	Code	Name	LCD Display	Parameter Setting		Setting Range	Unit
BAS	10	Input power frequency	60/50 Hz Sel	0	60 Hz	0–1	-

Set Inverter input power voltage. Low voltage fault trip level changes automatically to the set

voltage standard.

Group	Code	Name	LCD Display	Parameter Setting		Setting Range		Unit
BAS	19	Input power voltage	AC Input Volt	200 Type	220	170–240		V
				400 Type	380	320–480	0.75~90kW	
						320-550	110~500kW	

5.34 Read, Write, and Save Parameters

Use read, write, and save function parameters on the inverter to copy parameters from the inverter to the keypad or from the keypad to the inverter.

Group	Code	Name	LCD Display	Parameter Setting		Setting Range	Unit
CNF	46	Parameter read	Parameter Read	1	Yes	-	-
	47	Parameter write	Parameter Write	1	Yes	-	-
	48	Parameter save	Parameter Save	1	Yes	-	-

Read, Write, and Save Parameter Setting Details

Code	Description
CNF-46 Parameter Read	Copies saved parameters from the inverter to the keypad. Saved parameters on the keypad will be deleted and replaced with the copied parameters.
CNF-47 Parameter Write	Copies saved parameters from the keypad to the inverter. Saved parameters on the inverter will be deleted and replaced with the copied parameters. If an error occurs during parameter writing, the previously saved data will be used. If there is no saved data on the Keypad, 'EEP Rom Empty' will be displayed.
CNF-48 Parameter Save	As parameters set during communication transmission are saved to RAM, the setting values will be lost if the power goes off and on. When setting parameters during communication transmission, select '1 (Yes)' at CNF-48 to save the set parameter.

Code	Description

5.35 Parameter Initialization

User changes to parameters can be initialized (reset) to factory default settings on all or selected groups. However, during a fault trip situation or operation, parameters cannot be reset.

Group	Code	Name	LCD Display	Parameter Setting		Setting Range	Unit
CNF	40	Parameter initialization	Parameter Init	0	No	0–15	

Parameter Initialization Setting Details

Code	Description			
	Setting		LCD Display	Function
CNF-40 Parameter Init	0	No	No	-
	1	Initialize all groups	All Grp	Initialize all data. Select '1 (All Grp)' and press the [PROG/ENT] key to start initialization. On completion, '0 (No)' will be displayed.
	2	Initialize DRV group	DRV Grp	Initialize data by groups. Select initialize group and press the [PROG/ENT] key to start initialization. On completion, '0 (No)' will be displayed.
	3	Initialize BAS group	BAS Grp	
	4	Initialize ADV group	ADV Grp	
	5	Initialize CON group	CON Grp	
	6	Initialize IN group	IN Grp	
	7	Initialize OUT group	OUT Grp	
	8	Initialize COM group	COM Grp	
	9	Initialize PID group	PID Grp	
	10	Initialize EPI group	EPI Grp	
	11	Initialize AP1 group	AP1 Grp	
	12	Initialize AP2 group	AP2 Grp	
	13	Initialize AP3 group	AP3 Grp	
	14	Initialize PRT group	PRT Grp	
	15	Initialize M2 group	M2 Grp	

5.36 Parameter View Lock

Use parameter view lock to hide parameters after registering and entering a user password.

Group	Code	Name	LCD Display	Parameter Setting	Setting Range	Unit
CNF	50	Parameter view lock	View Lock Set	Un-locked	0–9999	
	51	Parameter view lock password	View Lock Pw	Password	0–9999	

Parameter View Lock Setting Details

Code	Description
CNF-51 View Lock Pw	Register a password to allow access to parameter view lock. Follow the steps below to register a password. No / Procedure 1 / [PROG/ENT] key on CNF-51 code will show the previous password input window. If registration is made for the first time, enter '0.' It is the factory default. 2 / If a password had been set, enter the saved password. 3 / If the entered password matches the saved password, a new window prompting the user to enter a new password will be displayed (the process will not progress to the next stage until the user enters a valid password). 4 / Register a new password. 5 / After registration, code CNF-51 will be displayed.
CNF-50 View Lock Set	To enable parameter view lock, enter a registered password. The [Locked] sign will be displayed on the screen to indicate that parameter view lock is enabled. To disable parameter view lock, re-enter the password. The [locked] sign will disappear.

5.37 Parameter Lock

Use parameter lock to prevent unauthorized modification of parameter settings. To enable parameter lock, register and enter a user password first.

Group	Code	Name	LCD Display	Parameter Setting	Setting Range	Unit
CNF	52	Parameter lock	Key Lock Set	Un-locked	0–9999	-
	53	Parameter lock password	Key Lock Pw	Password	0–9999	-

Parameter Lock Setting Details

Code	Description
CNF-53 Key Lock PW	Register a password to prohibit parameter modifications. Follow the procedures below to register a password. No — Procedures 1 — Press the [PROG/ENT] key on CNF-53 code and the saved password input window will be displayed. If password registration is being made for the first time, enter '0'. It is the factory default. 2 — If a saved password has been set, enter the saved password. 3 — If the entered password matches the saved password, then a new window to enter a new password will be displayed. (The process will not move to next stage until the user enters a valid password). 4 — Register a new password. 5 — After registration, Code CNF-53 will be displayed.
CNF-52 Key Lock Set	To enable parameter lock, enter the registered password. The [Locked] sign will be displayed on the screen to indicate that prohibition is enabled. Once enabled, pressing the [PROG/ENT] key at once function code will not allow the display edit mode to run. To disable parameter modification prohibition, re-enter the password. The [Locked] sign will disappear.

Caution

If parameter view lock and parameter lock functions are enabled, no inverter operation related function changes can be made. It is very important that you memorize the password.

5.38 Changed Parameter Display

This feature displays all the parameters that are different from the factory defaults. Use this feature to track changed parameters.

Group	Code	Name	LCD Display	Parameter Setting		Setting Range	Unit
CNF	41	Changed parameter display	Changed Para	0	View All	-	-

Changed Parameter Display Setting Details

Code	Description		
CNF-41 Changed Para	Setting		Function
	0	View All	Display all parameters
	1	View Changed	Display changed parameters only

5.39 User Group

Create a user defined group and register user-selected parameters from the existing function groups. The user group can carry up to a maximum of 64 parameter registrations.

Group	Code	Name	LCD Display	Parameter Setting		Setting Range	Unit
CNF	42	Multi-function key settings	Multi Key Sel	3	UserGrp SelKey	-	-
	45	Delete all user registered codes	UserGrp AllDel	0	No	-	-

User Group Setting Details

Code	Description	
CNF-42 Multi Key Sel	Select 3 (UserGrp SelKey) from the multi-function key setting options. If user group parameters are not registered, setting the multi-function key to the user group select key (UserGrp SelKey) will not display user group (USR Grp) items on the Keypad. Follow the procedures below to register parameters to a user group.	
	No	Procedure
	1	Set CNF-42 to '3 (UserGrp SelKey)'. A U icon will be displayed at the top of the LCD display.
	2	In the parameter mode (PAR Mode), move to the parameter you

Code	Description
	need to register and press the [MULTI] key. For example, if the [MULTI] key is pressed in the frequency reference in DRV-01 (Cmd Frequency), the screen below will be displayed. 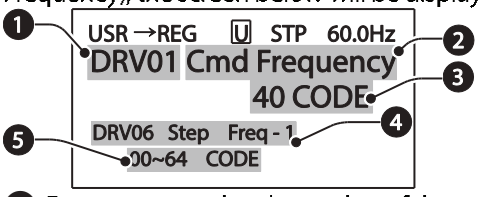 ❶ Group name and code number of the parameter ❷ Name of the parameter ❸ Code number to be used in the user group. Pressing the [PROG/ENT] key on the code number (40 Code) will register DRV-01 as code 40 in the user group. ❹ Existing parameter registered as the user group code 40 ❺ Setting range of the user group code. Entering '0' cancels the settings.
	3 ❸ Set a code number to use to register the parameter in the user group. Select the code number and press the [PROG/ENT] key.
	4 Changing the value in ❸ will also change the value in ❹. If no code is registered, 'Empty Code' will be displayed. Entering '0' cancels the settings.
	5 The registered parameters are listed in the user group in U&M mode. You can register one parameter multiple times if necessary. For example, a parameter can be registered as code 2, code 11, and more in the user group.
	Follow the procedures below to delete parameters in the user group.
	No. / Settings
	1 Set CNF-42 to '3 (UserGrp SelKey)'. A U icon will be displayed at the top of the LCD display.
	2 In the USR group in U&M mode, move the cursor to the code that is to be deleted.
	3 Press the [MULTI] key.
	4 Move to 'YES' on the deletion confirmation screen, and press the [PROG/ENT] key.
	5 Deletion completed.
CNF-25 UserGrp AllDel	Set to '1 (Yes)' to delete all registered parameters in the user group.

5.40 Easy Start On

Run Easy Start On to easily setup the basic motor parameters required to operate a motor in a batch. Set CNF-61 (Easy Start On) to '1 (Yes)' to activate the feature, initialize all parameters by setting CNF-40 (Parameter Init) to '1 (All Grp)', and restart the inverter to activate Easy Start On.

Group	Code	Name	LCD Display	Parameter Setting		Setting Range	Unit
CNF	61	Parameter easy start settings	Easy Start On	1	Yes	-	-

Code	Description
CNF-61 Easy Start On	Follow the procedures listed below to set the easy start on parameters. No — Procedures 1 — Set CNF-61 (Easy Start On) to '1(Yes)'. 2 — Select'1 (All Grp)' in CNF-40 (Parameter Init) to initialize all parameters 3 — Restarting the inverter will activate Easy Start On. Set the values in the following screens on the Keypad. To escape from Easy Start On, press the [ESC] key. • Start Easy Set: Select 'Yes'. • CNF-43: Select a macro. • BAS-10 60/50 Hz Sel: Set motor rated frequency. • DRV-14 Motor Capacity: Set motor capacity. • BAS-13 Rated Curr: Set motor rated current. • BAS-15 Rated Volt: Set motor rated voltage. • BAS-11 Pole Number: Set motor pole number. • BAS-19 AC Input Volt: Set input voltage. • PRT-08 Select start at trip reset • PRT-09 Retry Number: Sets the number of restart trial when performing a trip reset. • COM-96 PowerOn Resume: Sets the serial communication restart function. • CON-71 SpeedSearch: Set SpeedSearch. • DRV-06 Cmd Source: Set command source. • DRV-07 Freq Ref Src: Set Frequency Reference source. • AP3-01 Now Date : Set the current date. • AP3-02 Now Time : Set the current time. When the settings are complete, the minimum parameter settings on the motor have been made. The Keypad will return to a monitoring display. Now the motor

		can be operated with the command source set at DRV-06.

Easy Start On Setting Details

> ⓘ Caution
>
> Use caution when turning on the inverter after Easy Start On configuration. If codes such as PRT-08 (Reset Restart), COM-96 (PowerOn Resume), or CON-71 (SpeedSearch) are configured in Easy Start On, the inverter may start operating as soon as it is powered on.

5.41 Config (CNF) Mode

The config mode parameters are used to configure keypad related features.

Group	Code	Name	LCD Display	Parameter Setting	Setting Range	Unit
CNF*	2	LCD brightness/contrast adjustment	LCD Contrast	-	-	
	10	Inverter S/W version	Inv S/W Ver	x.xx	-	
	11	Keypad S/W version	Keypad S/W Ver	x.xx	-	-
	12	Keypad title version	KPD Title Ver	x.xx	-	-
	30–32	Power slot type	Option-x Type	None	-	-
	44	Erase trip history	Erase All Trip	No	-	-
	60	Add title update	Add Title Up	No	-	-
	62	Initialize accumulated electric energy	WH Count Reset	No	-	-

www.nicsanat.com
021-87700210
NIC SANAT
نیک صنعت

Config Mode Parameter Setting Details

Code	Description
CNF-2 LCD Contrast	Adjusts LCD brightness/contrast on the keypad.
CNF-10 Inv S/W Ver, CNF-11 Keypad S/W Ver	Checks the OS version in the inverter and on the keypad.
CNF-12 KPD Title Ver	Checks the title version on the keypad.
CNF-30–32 Option-x Type	Checks the type of option board installed in the option slot. The H100 inverters use type-1 option boards only (CNF-30 Option-1 Type). CNF-31 and CNF-32 are not used.
CNF-44 Erase All Trip	Deletes the stored trip history.
CNF-60 Add Title Up	When inverter SW version is updated and more code is added, CNF-60 settings will add, display, and operate the added codes. Set CNF-60 to '1 (Yes)' and disconnect the keypad from the inverter. Reconnecting the keypad to the inverter updates titles.
CNF-62 WH Count Reset	Initialize the accumulated electric energy consumption count.

5.42 Macro Selection

Group	Code	Name	LCD Display	Parameter Setting		Setting Range	Unit
CNF	43	Macro selection	Macro Select	0	Basic	0–7	-
				1	Compressor		
				2	Supply Fan		
				3	Exhaust Fan		
				4	Cooling Tower		
				5	Circul. Pump		
				6	Vacuum Pump		

				7	Constant Torq		

The Macro selection function is used to put various application functions together in a group. For applications with the H100 series inverters, 7 basic Macro configurations are currently available. Macro functions cannot be added by the user, but the data can be modified.

Macro Selection Details

Code	Description
CNF-43 Macro Select	A list of Macro settings is displayed for user selection. When a Macro function is selected, all the related parameters are automatically changed based on the inverter's Macro settings. If '0 (Basic)' is selected, all the inverter parameters, including the parameters controlled by the Macro function, are initialized. For other macro application settings (settings 1–7), refer to *5.42 Macro Selection* on page *264*.

5.43 Timer Settings

Set a multi-function input terminal to a timer. Sets the On/Off controls to the multi-function outputs and relays according to the timer settings.

Group	Code	Name	LCD Display	Parameter Setting		Setting Range	Unit
IN	65–71	Px terminal configuration	Px Define (Px: P1–P7)	35	Timer In	0-55	-
OUT	31	Multi-function relay 1	Relay 1	22	Timer Out	0-41	-
	33	Multi-function output 1	Q1 Define				
	55	Timer on delay	TimerOn Delay	3.00		0.00–100.00	sec
	56	Timer off delay	TimerOff Delay	1.00		0.00–100.00	sec

Timer Setting Details

Code	Description
IN-65–71 Px Define	Choose one of the multi-function input terminals and change it to a timer terminal by setting it to '35(Timer In)'.

Code	Description
OUT-31 Relay 1, OUT-36 Q1 Define	Set the multi-function output terminal or relay to be used as a timer to '22 (Timer out)'.
OUT-55 TimerOn Delay, OUT-56 TimerOff Delay	Input a signal (On) to the timer terminal to operate a timer output (Timer out) after the time set at OUT-55 has passed. When the multi-function input terminal is off, the multi-function output or relay turns off after the time set at OUT-56.

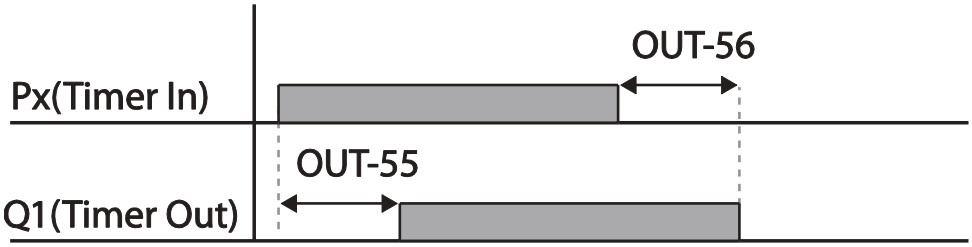

5.44 Multiple Motor Control (MMC)

The MMC (Multiple Motor Control) function is used to control multiple motors for a pump system. The main motor connected with the inverter output is controlled by the PID controller. The auxiliary motors are connected with the supply power and turned on and off by the relay within the inverter.

Group	Code	Name	LCD Display	Parameter Setting	Setting Range		Unit
AP1	40	MMC function selection	MMC Sel	0: None	0	None	-
					1	Single Ctrl	
					2	Multi Follower	
					3	Multi Master	
					4[1]	Serve Drv	
	41	Bypass selection	Regul Bypass	0: No	0	No	-

[1] AP1-47~87 and AP1-91~98 are not displayed when AP1-40 is set to '4(Serve Drv).

Group	Code	Name	LCD Display	Parameter Setting	Setting Range		Unit
					1	Yes	
	42	Number of auxiliary motors	Num of Aux	5	1 – AuxMaxMotor[2]		-
	43[3]	Auxiliary starting motor selection	Starting Aux	1	1–5		-
	44	Number of operating auxiliary motors	Aux Motor Run	-	-		-
	45	Auxiliary motor (#1– 4) priority	Aux Priority 1	-	-		-
	46	Auxiliary motor (#5– 8) priority	Aux Priority 2	-	-		-
	48	Auxiliary motor operation at stop	Aux All Stop	0: No	0	No	■
					1	Yes	
	49	Stop order for auxiliary motors	FIFO/FILO	0: FILO	0	FILO	-
					1	FIFO	
					2	Op Time Order	
	50	Auxiliary motor pressure difference	Actual Start Diff	2	0–100		Unit
	51	Main motor acceleration time when auxiliary motor # is reduced	Aux Acc Time	2	0–600.0		Sec
	52	Main motor	Aux Dec	2	0–600.0		Sec

[2] If Extension IO option is equipped or AP1-40 is set to'2 or 3, AuxMaxMotor is set to'8. Otherwise AuxMaxMotor is set to'5.

[3] If AP1-49 is set to'2(Op Time Order), the parameter cannot be set by a user and it is automatically changed as the operation time of aux motors.

Group	Code	Name	LCD Display	Parameter Setting	Setting Range		Unit
		deceleration time when auxiliary motor is added	Time				
	53	Auxiliary motor start delay time	Aux Start DT	5	0.0–999.9		Sec
	54	Auxiliary motor stop delay time	Aux Stop DT	5	0.0–999.9		Sec
	55	Auto change mode selection	Auto Ch Mode	0: None	0	None	-
					1	AUX Exchange	
					2	MAIN Exchange	
	56	Auto change time	Auto Ch Time	72: 00	00: 00–99: 00		Min
	57	Auto change frequency	Auto Ch Level	20.00	Low Freq–High Freq		Hz
	58	Auto change operation time	Auto Op Time	-	-		-
	59	Auxiliary motor pressure difference	Aux Stop Diff	2	0~100		Unit
	60	Target frequency of Aux Motor while Multi Master is operating	Follower Freq	60.00	Low Freq~ High Freq		Hz
	61	#1 auxiliary motor start frequency	Start Freq 1	45	Low Freq–High Freq		Hz
	62	#2 auxiliary motor start frequency	Start Freq 2	45	Low Freq–High Freq		Hz
	63	#3 auxiliary motor start	Start Freq 3	45	Low Freq–High Freq		Hz

Group	Code	Name	LCD Display	Parameter Setting	Setting Range	Unit
		frequency				
	64	#4 auxiliary motor start frequency	Start Freq 4	45	Low Freq–High Freq	Hz
	65	#5 auxiliary motor start frequency	Start Freq 5	45	Low Freq–High Freq	Hz
	66[4]	#6 auxiliary motor start frequency	Start Freq 6	45	Low Freq–High Freq	Hz
	67	#7 auxiliary motor start frequency	Start Freq 7	45	Low Freq–High Freq	Hz
	68	#8 auxiliary motor start frequency	Start Freq 8	45	Low Freq–High Freq	Hz
	70	#1 auxiliary motor stop frequency	Stop Freq 1	20	Low Freq–High Freq	Hz
	71	#2 auxiliary motor stop frequency	Stop Freq 2	20	Low Freq–High Freq	Hz
	72	#3 auxiliary motor stop frequency	Stop Freq 3	20	Low Freq–High Freq	Hz
	73	#4 auxiliary motor stop frequency	Stop Freq 4	20	Low Freq–High Freq	Hz
	74	#5 auxiliary motor stop frequency	Stop Freq 5	20	Low Freq–High Freq	Hz

[4] AP1-66~68 , AP1-75~77 and AP1-85~87 are displayed when Extension IO option is equipped or AP1-40 is set to '2 or 3.

Group	Code	Name	LCD Display	Parameter Setting	Setting Range		Unit
	75	#6 auxiliary motor stop frequency	Stop Freq 6	20	Low Freq–High Freq		Hz
	76	#7 auxiliary motor stop frequency	Stop Freq 7	20	Low Freq–High Freq		Hz
	77	#8 auxiliary motor stop frequency	Stop Freq 8	20	Low Freq–High Freq		Hz
	80	#1 auxiliary motor reference compensation	Aux1 Ref Comp	0	0–Unit Band		Unit
	81	#2 auxiliary motor reference compensation	Aux2 Ref Comp	0	0–Unit Band		Unit
	82	#3 auxiliary motor reference compensation	Aux3 Ref Comp	0	0–Unit Band		Unit
	83	#4 auxiliary motor reference compensation	Aux4 Ref Comp	0	0–Unit Band		Unit
	84	#5 auxiliary motor reference compensation	Aux5 Ref Comp	0	0–Unit Band		Unit
	85	#6 auxiliary motor reference compensation	Aux6 Ref Comp	0	0–Unit Band		Unit
	86	#7 auxiliary motor reference compensation	Aux7 Ref Comp	0	0–Unit Band		Unit
	87	#8 auxiliary motor reference compensation	Aux8 Ref Comp	0	0–Unit Band		Unit
	90	Interlock selection	Interlock	0: No	0	No	-
					1	Yes	

Group	Code	Name	LCD Display	Parameter Setting	Setting Range		Unit
	91	Delay time before an operation for the next motor when an interlock or an auto change on the main motor occur.	Interlock DT	5.0	0–360.0		Sec
	95[5]	Selecting auxiliary motor to indicate in [AP1-96] [AP1-97].	AuxRunTime Sel		0	Aux 1	
					1	Aux 2	
					2	Aux 3	
					3	Aux 4	
					4	Aux 5	
					5[6]	Aux 6	
					6	Aux 7	
					7	Aux 8	
	96	Operating time(Day) of auxiliary motor chosen in [AP1-95].	AuxRunTime Day	0	0~65535		
	97	Operating time of auxiliary motor chosen in [AP1-95].	AuxRunTime Min	00:00	00:00 ~ 23:59		
	98	Deleting operating time of auxiliary motor.	AuxRunTime Clr		0	None	
					1	All	

[5] AP1-95~98 are available when MMC and Master Follower functions are performed.

[6] '5(Aux6)~7(Aux8)' of AP1-95 and '7(Aux6)~9(Aux8)' of AP1-98 and displayed when Extension IO option is equipped or AP1-40 is set to '2 or 3.

					2	Aux 1	
					3	Aux 2	
					4	Aux 3	
					5	Aux 4	
					6	Aux 5	
					7	Aux 6	
					8	Aux 7	
					9	Aux 8	

www.nicsanat.com
021-87700210
NIC SANAT
نیک صنعت

MMC Setting Details

Code	Description
AP1-40 MMC Sel	Selects the MMC operation settings. -None : Deactivates MMC function -Single Ctrl : Activates general MMC function -Multi Follower : Activates Master Follower as Multi Follower mode -Multi Master: Activates Master Follower as Multi Master mode -Serve Drv: Sets Serve Drv used at Master Follower.
AP1-42 Num of Aux	Decides the number of auxiliary motors to use.
AP1-43 Starting Aux	Sets the start auxiliary motor.
AP1-44 Aux Motor Run	Indicates the number of the operating auxiliary motors.
AP1-45–46 Aux Priority1–2	Indicates the operating priority of auxiliary motors. According to setting by users, it can be influenced by Interlock, AutoChange and operating time Each four-digit numbers for the parameter mean the auxiliary motor numbers and indicate the priority of auxiliary motors. In other words, the most right number of [AP1-45 Aux Priority1] indicates the priority of Auxiliary motor 1 and the second number from the right of [AP1-45 Aux Priority1] indicates the priority of Auxiliary motor 2. 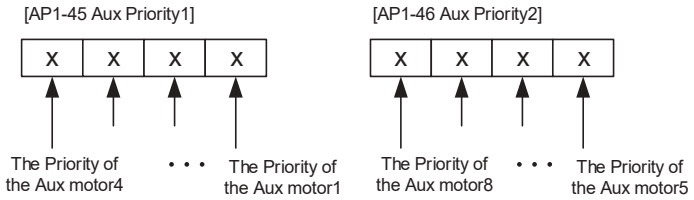
AP1-48 Aux All Stop	When [AP1-48 Aux All Stop] is set to "No" during input to stop operating, auxiliary motors are turned off at the same time. When [AP1-48 Aux All Stop] is set to "YES", auxiliary motors are turned off gradually based on time of [AP1-54 Aux Stop DT].
AP1-49 FIFO/FILO	Sets the operating priority of MMC. FIFO : Same as On/Off order of auxiliary motors. FILO: Opposite to On/Off order auxiliary motors. Op Time Order : setting automatically according to operating time of auxiliary motors.
AP1-50 Aux Start Diff AP1-59 Aux Stop Diff	One of the conditions to turn on and off the next auxiliary motors. Parameters to set the difference when the difference between the reference and feedback is more than regular value

AP1-51 Acc Time AP1-52 Dec Time	Parameters used when AP1-40 is set to 'Single Ctrl' When an auxiliary motor starts or stops, the main motor stops the PID control, and performs general acceleration and deceleration. When an auxiliary motor starts, the main motor decelerates to the auxiliary motor deceleration frequency set at AP1-70–74 (Stop Freq 1–5) based on the deceleration time set at AP1-52 (Dec Time). When the auxiliary motor stops, the main motor accelerates up to the auxiliary motor restart frequency set at AP1-61–65 (Start Freq 1–5) based on the acceleration time set at AP1-51 (Acc Time).
AP1-53 Aux Start DT AP1-54 Aux Stop DT	The auxiliary motors turns on or off after the auxiliary motor stop delay time or the auxiliary motor restart delay time elapses, or if the difference between the current reference and the feedback is greater than the value set at AP1-50 (Actual Pr Diff).
AP1-61–65 Start Freq1–5	Sets the auxiliary motor start frequency.
AP1-70–74 Stop Freq 1–5	Sets the auxiliary motor stop frequency.
AP1-95 AuxRunTime Sel	Selects auxiliary motor to be used in AP1-96 and AP1-97.
AP1-96 AuxRunTime Day	Indicates operating time(day) selected in AP1-95.
AP1-97 AuxRunTime Min	Indicates operating time of auxiliary motors selected in AP1-95.
AP1-98 AuxRunTime Clr	Deletes operating time of auxiliary motors.
OUT-31–35 Relay 1–5 OUT-36 Q1 Define	Configure the output terminals to '21 (MMC)' to use the terminals to control the auxiliary motors. The number of the configured output terminals determines the total number of auxiliary motors to be used.

5.44.1 Multiple Motor Control (MMC) Basic Sequence

Multiple motor control (MMC) is an operation based on PID control. During an MMC operation, the main and auxiliary motors organically operate together.

During a PID operation, the auxiliary motors are turned on when the inverter frequency reaches the start frequencies set at AP1-61–65 (Start freq), and the difference between the PID reference and feedback is bigger than the value set at AP1-50. Then, the auxiliary motors stop operating when the operation frequency reach the stop frequency set at AP1-70–74 (Stop Freq 1–5) and the difference between the PID feedback and reference becomes greater than the value set at AP1-50.

AP1	61–65	#1–5 auxiliary motor start frequency	Start Freq 1–5	Frequency value within the range	Low Freq– High Freq	Hz
	50	Auxiliary motors pressure difference	Actual Pr Diff	Percentage value within the range	0–100 (%)	%
	70–74	#1–5 auxiliary motor stop frequency	Stop Freq 1–5	Frequency value within the range	Low Freq– High Freq	Hz

www.nicsanat.com
021-87700210
NIC SANAT
نیک صنعت

The following diagram describes the MMC basic sequence based on FILO and FIFO settings.

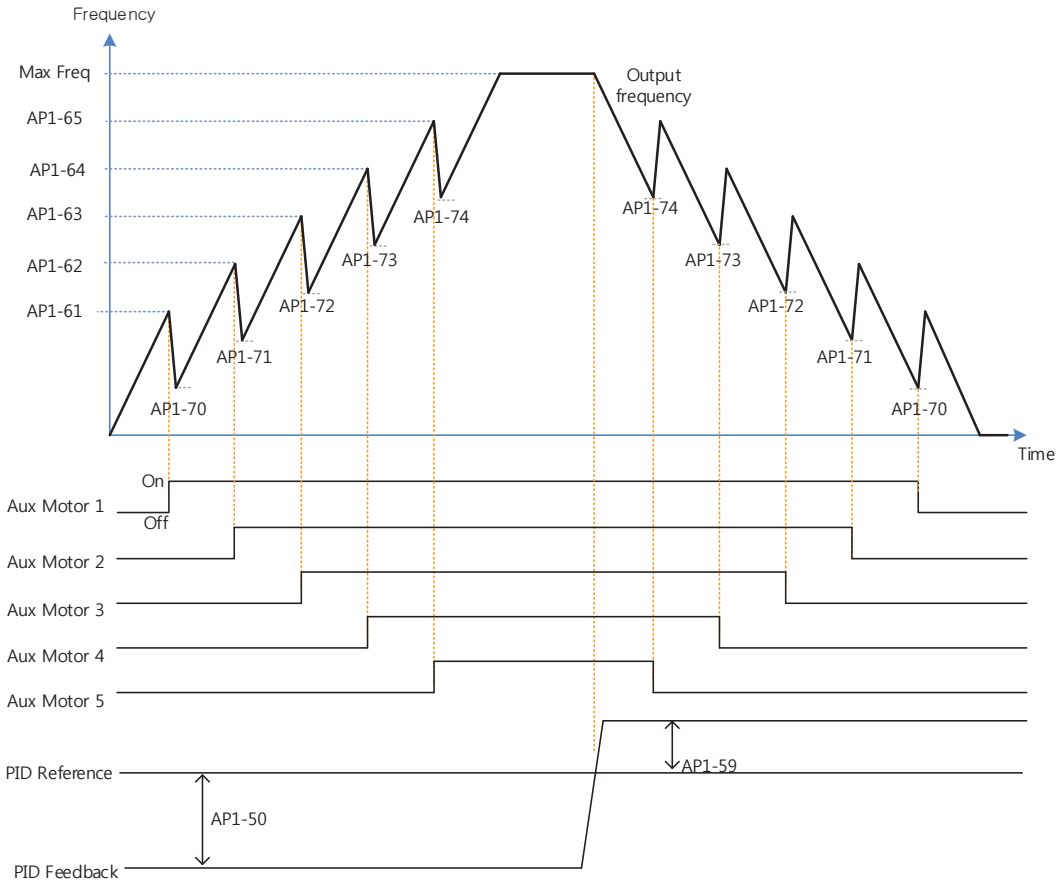

MMC Basic operation(FILO)

www.nicsanat.com
021-87700210
NIC SANAT
نیک صنعت

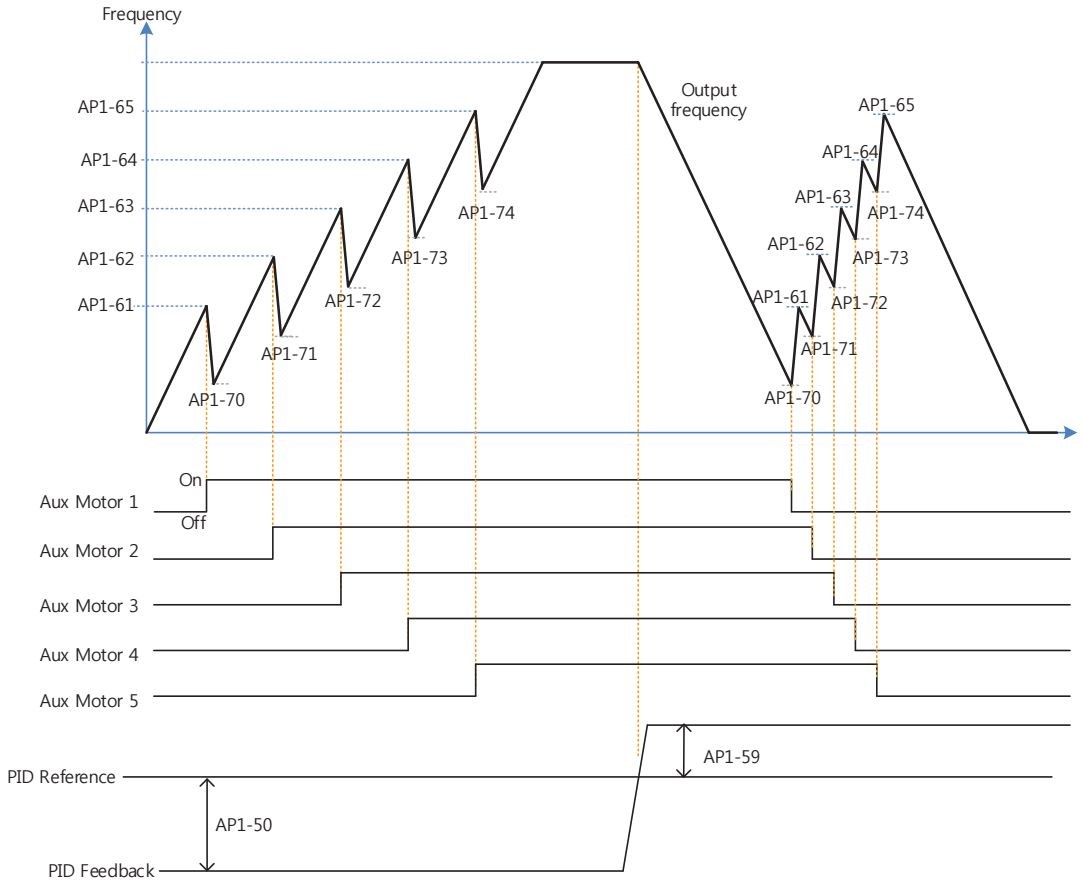

MMC Basic operation(FIFO)

www.nicsanat.com
021-87700210
NIC SANAT
نیک صنعت

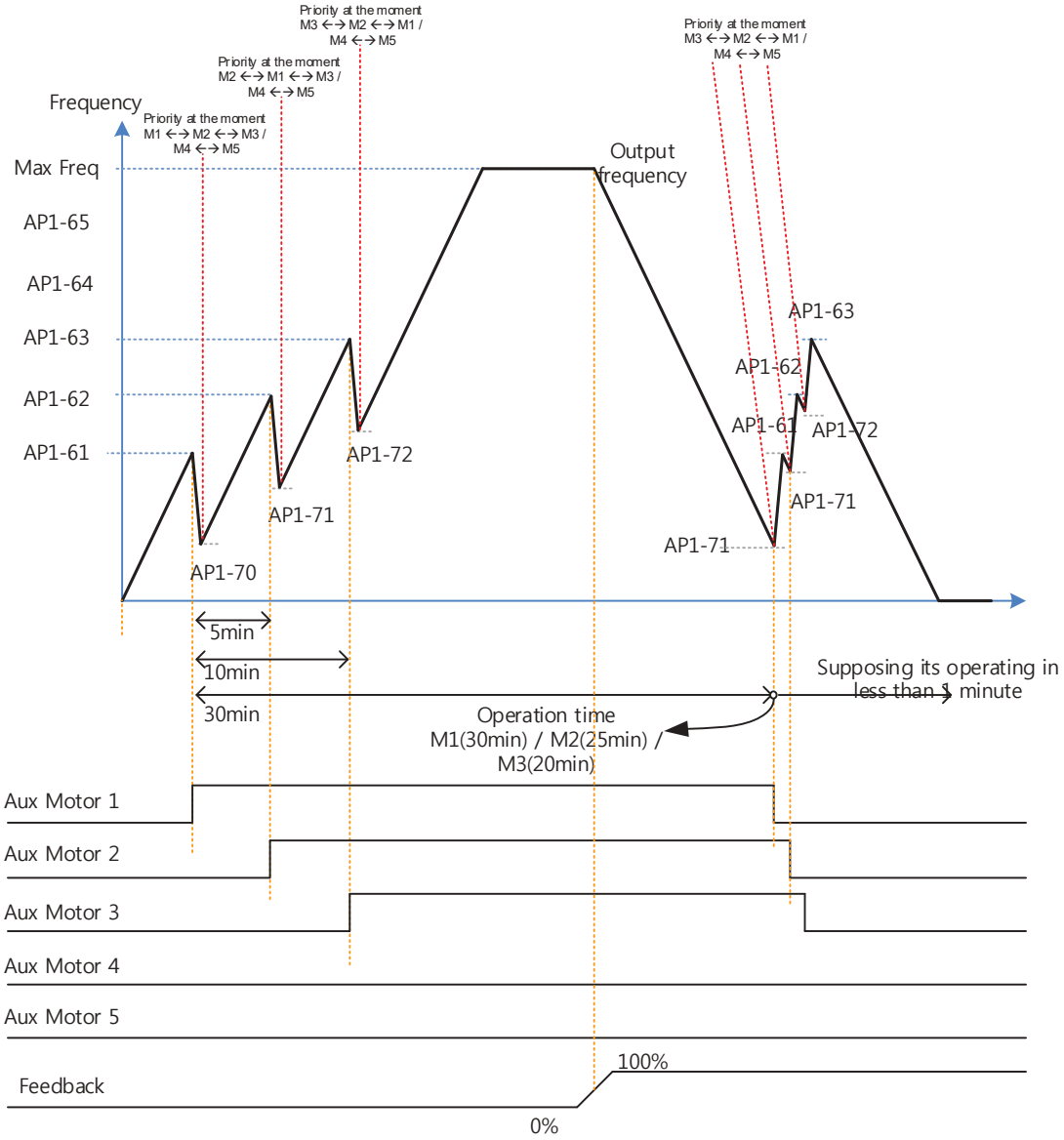

MMC Basic operation(OP Time Order)

The following diagram is an operation graph based on the start and stop delay times set at AP1-53 (Aux start DT) and AP1-54 (Aux stop DT). When the start or stop frequencies are reached, the auxiliary motor waits for the time set at AP1-53 (Aux start DT) or AP1-54 (Aux stop DT) before it

starts or stops.

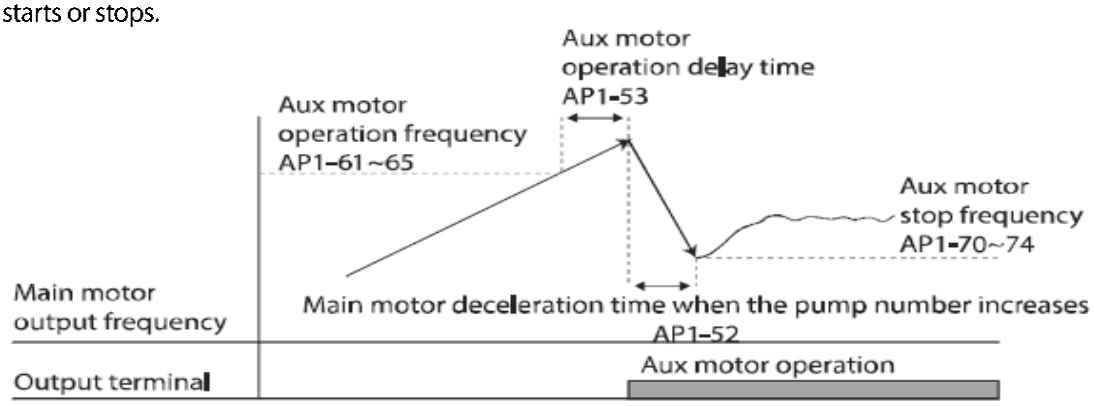

Auxiliary motor operation sequence by increased load

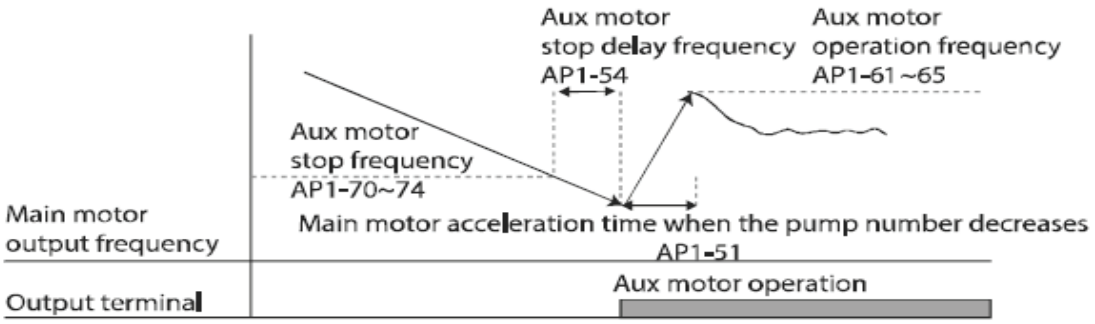

Auxiliary motor stop sequence by decreased load

5.44.2 Standby Motor

In case that the number set to MMC in [Relay 1~5] of OUT group is lower than the number of [Num of Aux], auxiliary motor becomes Standby motor state as much as the difference.

.

Ex) In case that Replay1, 2, 3 and 4, and 5 are set to MMC and the number of [Num of Aux] is 3.

Relay1	Relay2	Relay3	Relay4	Relay5
Operable	Operable	Operable	Standby	Standby

In this case, though only Relay1, 2, 3 operate MMC function and the output of Relay is set to MMC, it doesn't work as long as the order is not changed by Interlock and Auto Change.

Standby auxiliary motor becomes operable when there is Interlock or Auto change in Operable auxiliary motor.

5.44.3 Auto Change

The auto change function enables the inverter to automatically switch operations between main and auxiliary motors. Prolonged continuous operation of a motor deteriorates motor capabilities. The auto change function switches the motors automatically when certain conditions are met to avoid biased use of certain motors and protect them from deterioration.

Group	Code	Name	LCD Display	Parameter Setting		Setting Range		Unit
AP1	55	Auto change mode selection	Auto Ch Mode	0	None	0	None	-
				1	Aux motor	1	AUX Exchange	
				2	Main motor	2	Main Exchange	
	56	Auto change time	Auto Ch Mode	Time value within the range		00: 00–99: 00		Sec.
	57	Auto change frequency	Auto Ch Level	Frequency value within the range		Low Freq–High Freq		Hz
	58	Auto change operation time	Auto Op Time	Time value within the range		-		Sec.

Auto Change Setting Details

Code	Description
AP1-55 Auto Ch Mode	Select the motors to apply the auto change function. Setting: 0 – None; 1 – Aux Exchange; 2 – Main Exchange Refer to Examples of Auto Change Sequences below for details.
AP1-56 Auto Ch Time	Sets the auto change intervals.
AP1-57 Auto Ch Level	The parameter is for Main Exchange. In case that [AP1-55 Auto Ch Mode] is set to Main Exchange, all the conditions for Auto Change are met under the frequency in which output frequency of Main motors are set in AP1-57. AP1-57 is the frequency to activate Auto Change.

Code	Description
AP1-58 Auto Op Time	Indicates time to activate Auto Change. In case that other conditions for Auto Change are not met in spite of meeting the condition of AP1-56, the value of time in AP1-58 might be bigger than the value set at Auto Ch Time of AP1-56 because of the failure of Auto Change.

When AP1-55 (Auto Ch Mode) is set to '0 (None)', the auxiliary motors operates based on the order (sequence) set at AP1-43 (Starting Aux). Auto Change functionality is disabled.

When AP1-55 (Auto Ch Mode) is set to '1 (Aux Exchange)', the auxiliary motors operate based on the order (sequence) set at AP1-43 (Starting Aux). Auto Change is activated when auxiliary motors are in the operating state over time of AP1-56 and then every auxiliary motor is stopped.

Once the auto change is operated, the auxiliary motor that started first is given the lowest priority and all the other auxiliary motors' priority level increases by 1. Then, general MMC operation

NOTE

Auto change does not work while the auxiliary motors are operating. Auto change is operated only when all the auxiliary motors are stopped and if all the conditions set for the auto change are met. When the inverter stops, all motors stop operating, and the auxiliary motor with the highest priority becomes the starting auxiliary motor. If the inverter power is turned off then turned back on, the auxiliary motor set at AP1-43 (Starting Aux) becomes the starting auxiliary motor.

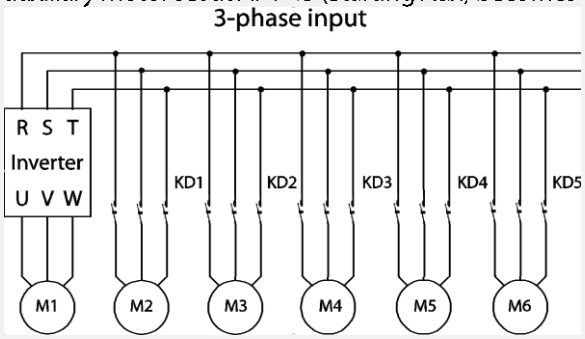

Start order and stop order of the auxiliary motors are based on the order set at AP1-49 (FIFO/FILO). The following diagrams depict the auxiliary motor start and stop sequence, based on a FIFO configuration, when the inverter operation time exceeds the auto change interval set at AP1-58. If all the auxiliary motors are turned off and the inverter operation frequency is below the frequency set at AP1-58 (Auto Op Time), auto change is operated. Then, when the inverter frequency increases due to decrease in the feedback, auxiliary motor #2 starts instead of auxiliary motor #1 due to this auto change (auxiliary motor #1 starts last, for it has the lowest priority).
Later on during the operation, when the feedback increases and the auxiliary motors begin to stop, the FILO setting is applied to control the order for the auxiliary motors to stop.

continues.

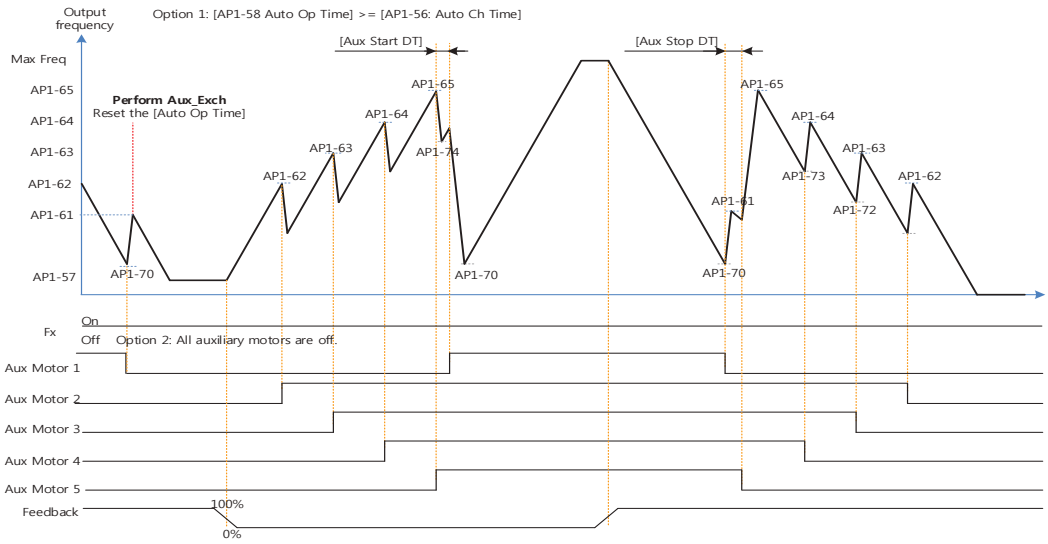

Aux Auto Change operation(FILO)

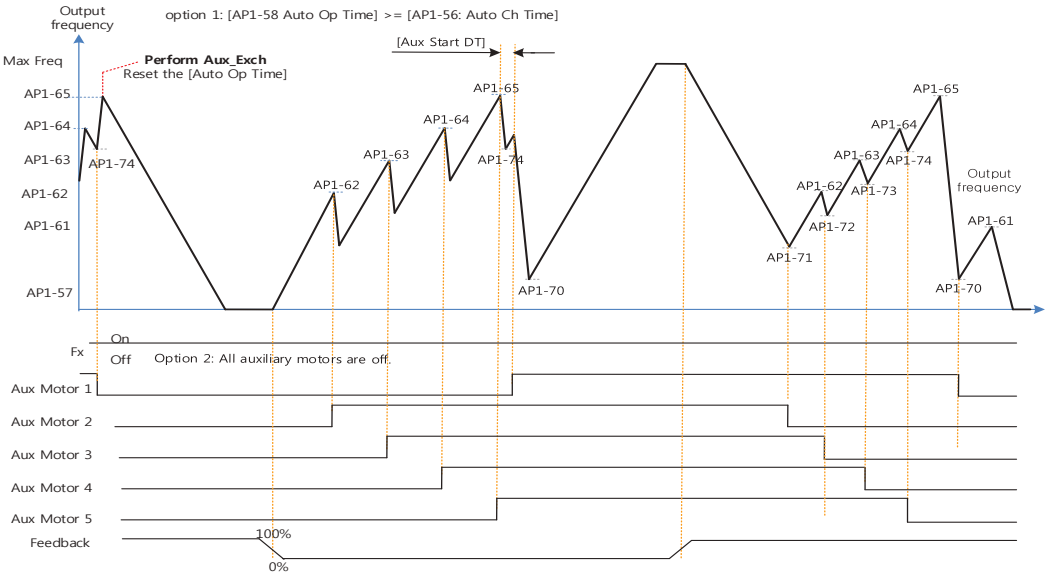

Aux Auto Change operation(FIFO)

www.nicsanat.com
021-87700210
NIC SANAT
نیک صنعت

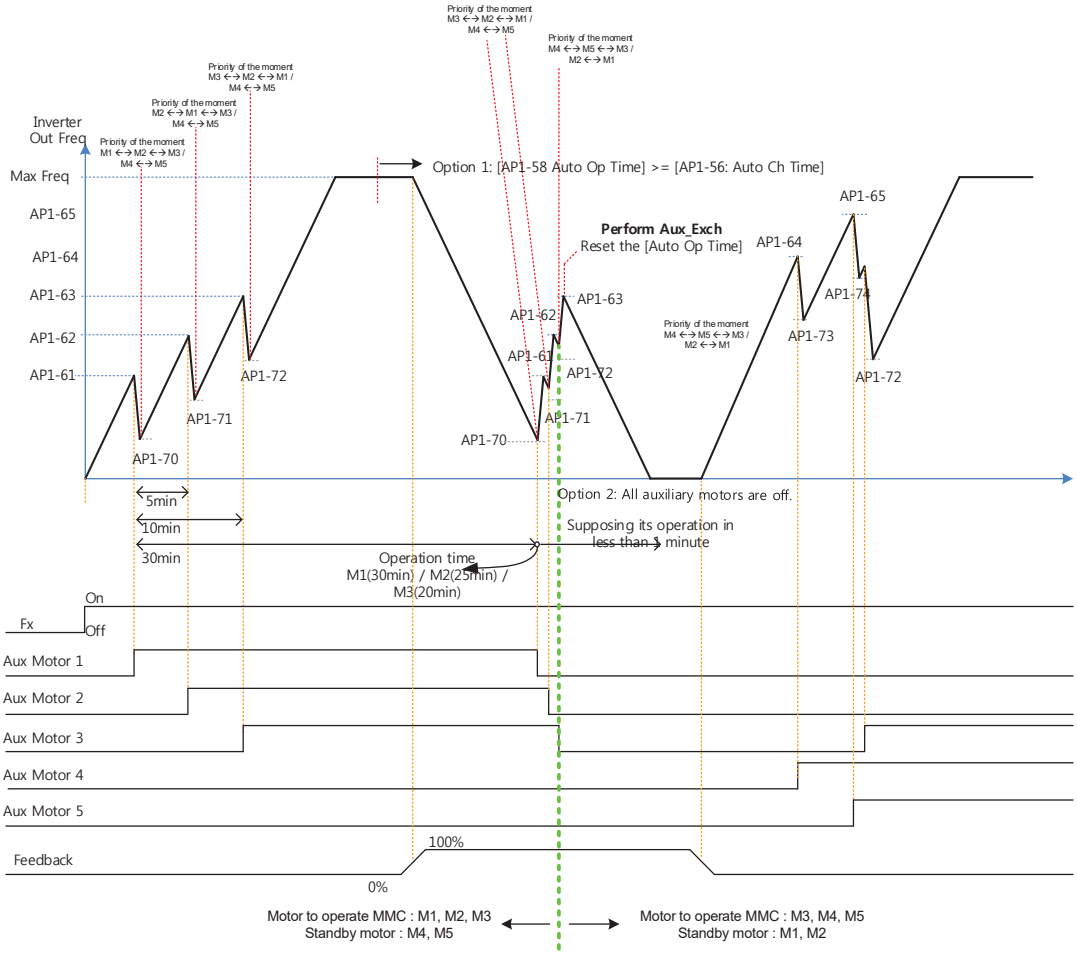

Aux Auto Change operation (Op Time Order) when operable motor and standby motor are set to 3 and 2 each

When AP1-55 (Auto Ch Mode) is set to '2 (Main Exchange),' the system uses all the motors (main and auxiliary motors) regardless of the types. The auxiliary motor with the highest priority is operated first and used as the main motor. Then, when the auto change conditions are met, this motor is stopped and the motor priorities are re-arranged. This way, the system always operates the motor with the highest priority and uses it as the main motor of the MMC operation. In this case, before auto change is operated for the main motor, the interlock delay time set at AP1-91 (Interlock DT) is applied.

www.nicsanat.com
021-87700210
NIC SANAT
نیک صنعت

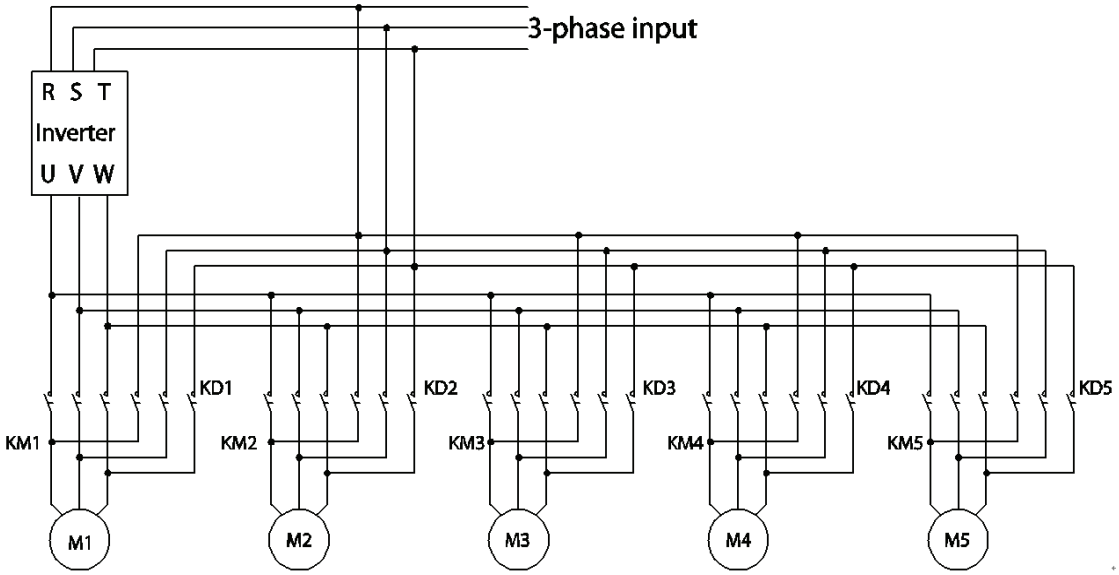

NOTE

Auto change does not work while the auxiliary motors are operating. Auto change is operated only when all the auxiliary motors are stopped and if all the conditions set for the auto change are met. When the inverter stops, all motors stop operating, and the auxiliary motor with the highest priority becomes the starting auxiliary motor. If the inverter power is turned off then turned back on, the auxiliary motor set at AP1-43 (Starting Aux) becomes the starting auxiliary motor.

The following diagrams depict the auto change operation when AP1-55 (Auto Ch Mode) is set to '2 (Main)', when the inverter operation time exceeds the auto change interval set at AP1-58. If the inverter operation frequency is below the frequency set at AP1-57, all the auxiliary motors including the start auxiliary motor are turned off. After the delay time set at AP1-91 (Interlock DT) elapses, the 'Main' auto change is operated. After the 'Main' auto change, the auxiliary motor that was turned on after the starting auxiliary motor becomes the main motor.

In the following diagrams, because auxiliary motor #1 is the starting auxiliary motor. Auxiliary motor #2 becomes the main motor after the auto change. The auxiliary motor on/off operation is identical to that of Aux Exchange, and the 'off' conditions differ based on the FIFO/FILO configuration.

www.nicsanat.com
021-87700210
NIC SANAT
نیک صنعت

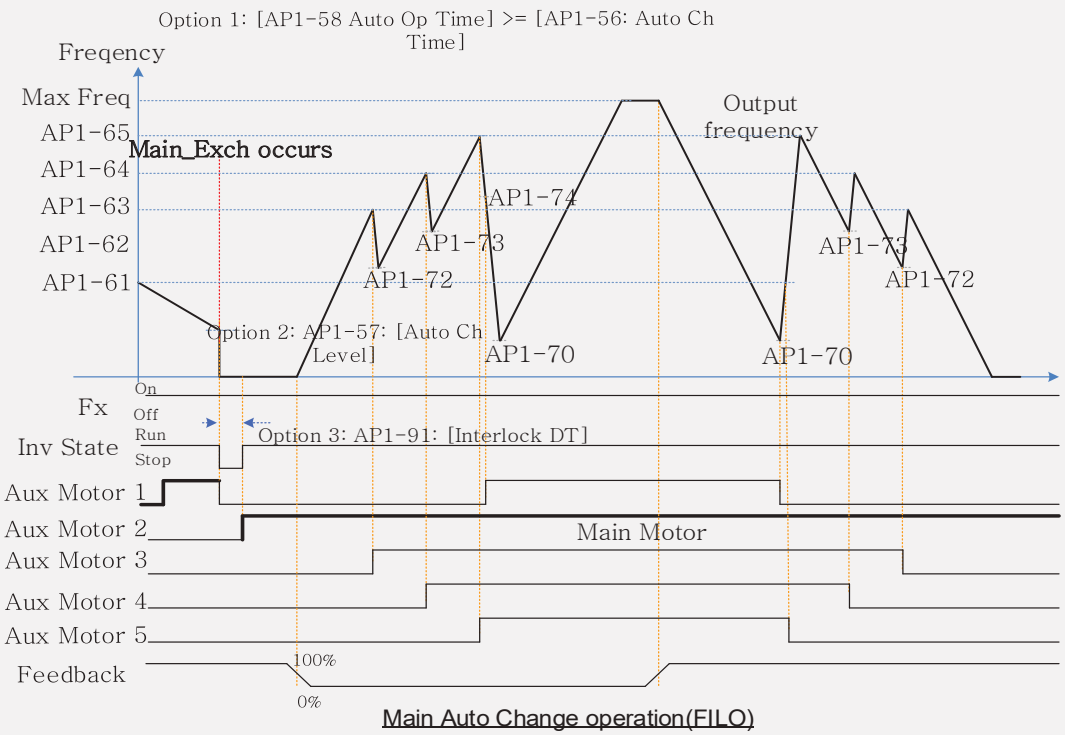

Main Auto Change operation(FILO)

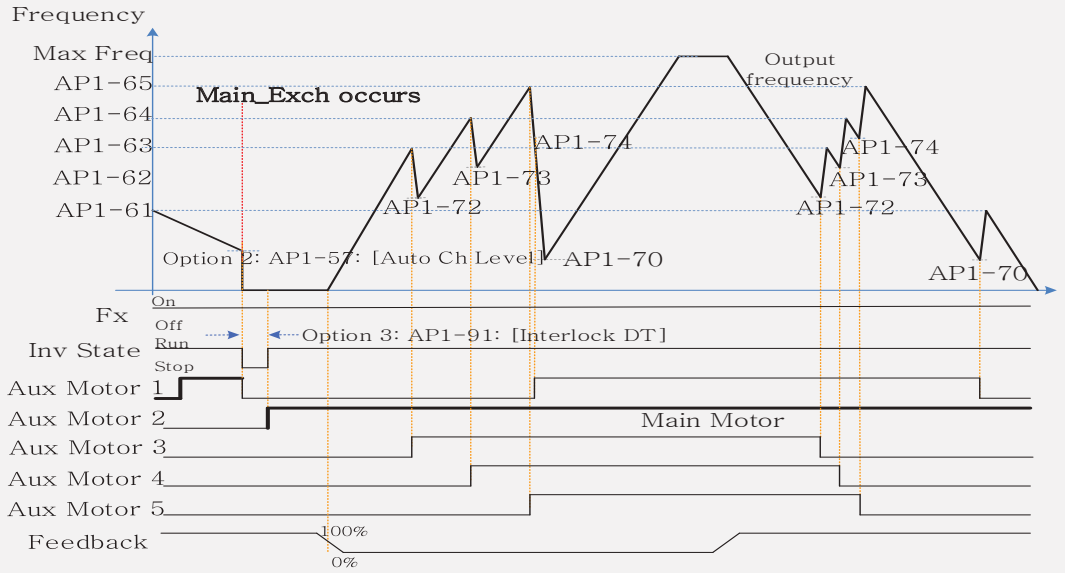

Main Auto Change operation(FIFO)

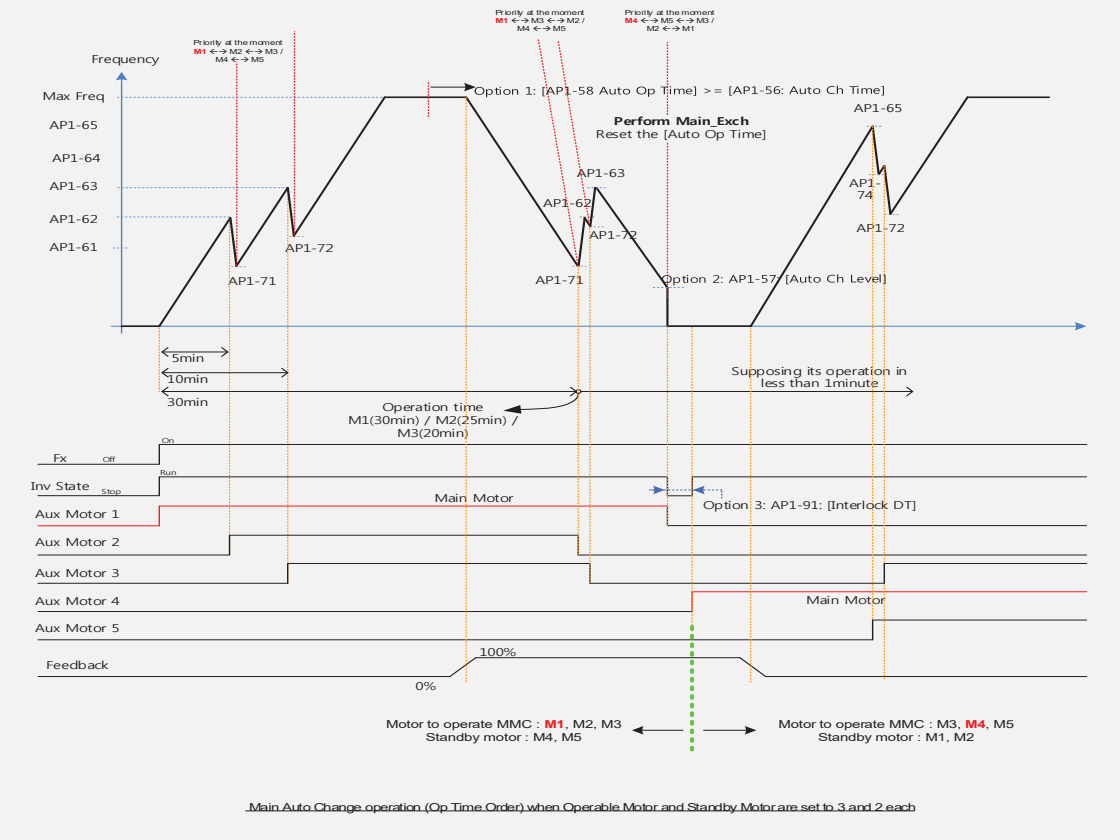

5.44.4 Interlock

When there is motor trouble, the interlock feature is used to stop the affected motor and replace it with another that is not currently operating (off state). To activate the interlock feature, connect the cables for abnormal motor signal to the inverter input terminal and configure the terminals as interlock 1–5 inputs. Then, the inverter decides the motor's availability based on the signal inputs. The order in which the alternative motor is selected is decided based on the auto change mode selection options set at AP1-55.

Group	Code	Name	LCD Display	Parameter Setting	Setting Range		Unit
AP1	90	Interlock selection	Interlock	1	0	NO	-
					1	YES	

After configuring the IN-65–71 multi-purpose input terminals as Interlock input 1–5, if an interlock signal is received from an auxiliary motor, the output contacts are turned off for the motor and the

motor is excluded from the MMC operation. This causes the priority level of the auxiliary motors with lower priority level than the interlocked motor to be increased by 1.

The interlock is released when the input terminals (IN-65–71) are turned off, and the relevant auxiliary motor is included in the MMC operation again, with lowest priority.

When the inverter stops, all motors stop operating, and the auxiliary motor with the highest priority becomes the starting auxiliary motor.

When the multi-purpose input terminals (IN-65–71, P1–7 Define) are set for the interlock feature, an interlock is 'Off' when the contacts are valid, and 'On' when they are invalid.

InterLock Setting Details

AP1-90 InterLock	Enables or disables the Interlock.
AP1-91 Interlock DT	Sets the delay time before the Interlock occurs.

Note

IN-65–71 PxDefine: Select the terminal from the input terminal function group (IN-65–71) and set Interlock 1-5 respectively with the correct motor order. When auto change mode selection (AP1–55) is set to '0 (None)' or '1 (Aux)', and if 5 motors are operated, including the main motor, the interlock numbers 1,2,3,4,5 refer to the motors connected to Relay 1,2,3,4,5 (If interlock numbers 1,2,3,4,5 are connected to Relay 1,2,3,4,5 at the inverter output terminal).
However, if auto change mode selection (AP1-55) is set to '2 (Main)', and the main and auxiliary motors are connected to the inverter output terminal Relay 1,2,3,4, Interlock 1,2,3,4 are the monitors connected to Relay 1,2,3,4.

www.nicsanat.com
021-87700210
NIC SANAT
نیک صنعت

The figure below shows the motor operating as a sequence by FILO. The motor turns on from the starting auxiliary motor (Starting Aux) by order, and turns off depending on the rise of PID feedback. At this point, the interlock occurs at auxiliary motor #2 by multi-function input, the auxiliary motor turns off. The output frequency falls to the frequency set at AP1-71, and rises again. Then, the interlock occurs at auxiliary motor #1. The auxiliary motor stops and falls to the frequency set at AP1-71, and then rises again. Interlock #2 should be released first, then release interlock #1 to let the auxiliary motor operate (When interlocks are released, they will have the lowest priority of the operating motors). If the auxiliary motor turns off by a rise of Feedback, the auxiliary motors turns off in order from 1 to 5, because auxiliary motor #1 turned on last. The interlocked auxiliary motor will have the lowest priority.

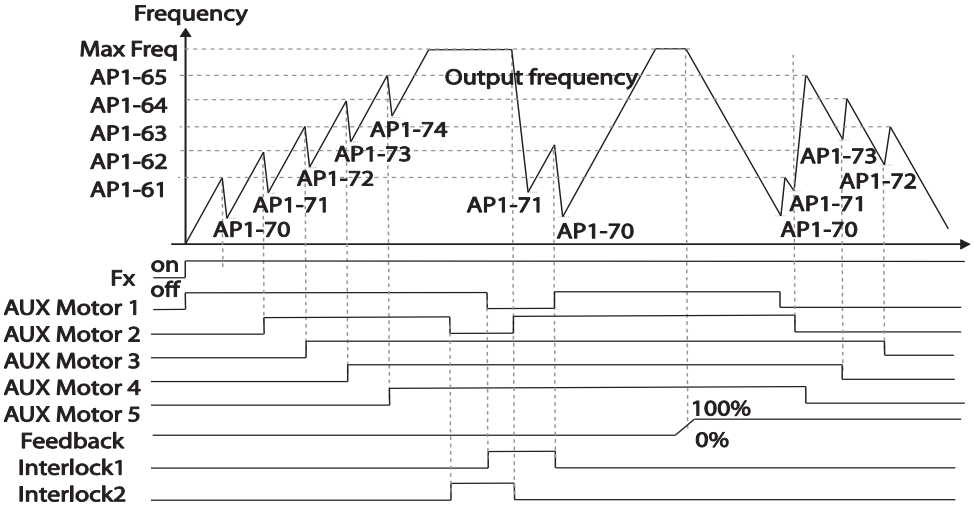

Interlock operation(FILO)

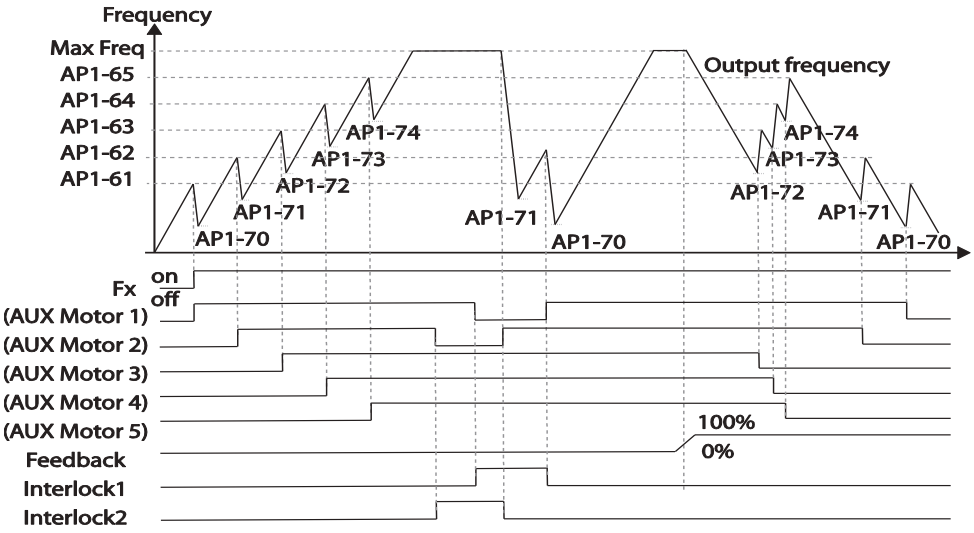

Interlock operation(FILO)

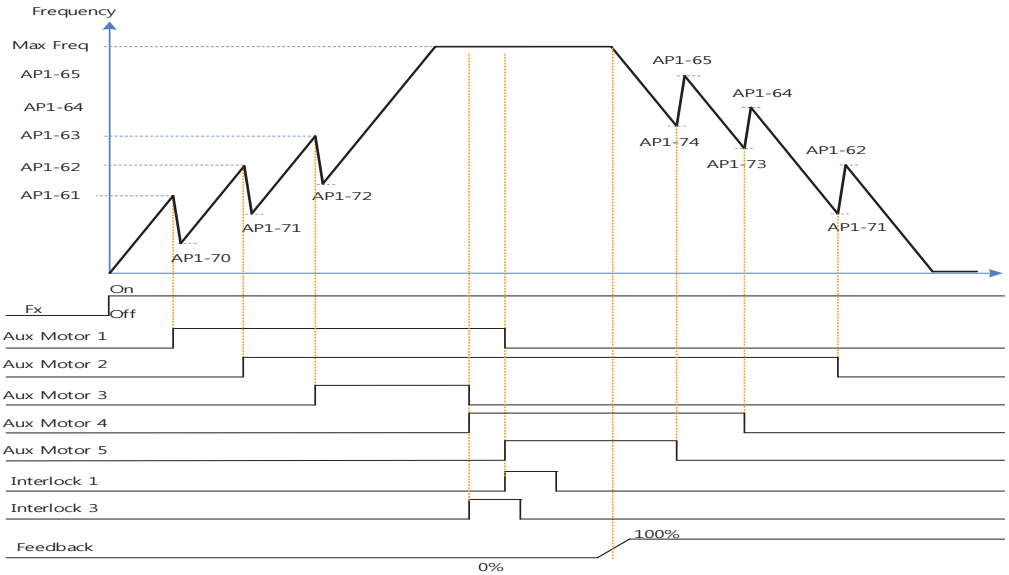

Interlock operation(Op time Order) when Operable Motor and Standby Motor are set to 3 and 2 each

When interlock is released, the auxiliary motor's priority becomes different. When Interlock occurs at auxiliary motor #3, the priority is number 1>3>4>5>2. When it occurs at auxiliary motor #1, the priority is number 3>4>5>2>1. The figure below shows the order of the auxiliary motors activating depending on the priority (of Interlock occurring and releasing). In the figure, the order is the same for FILO/FIFO, because the auxiliary motor turns on. [redacted]

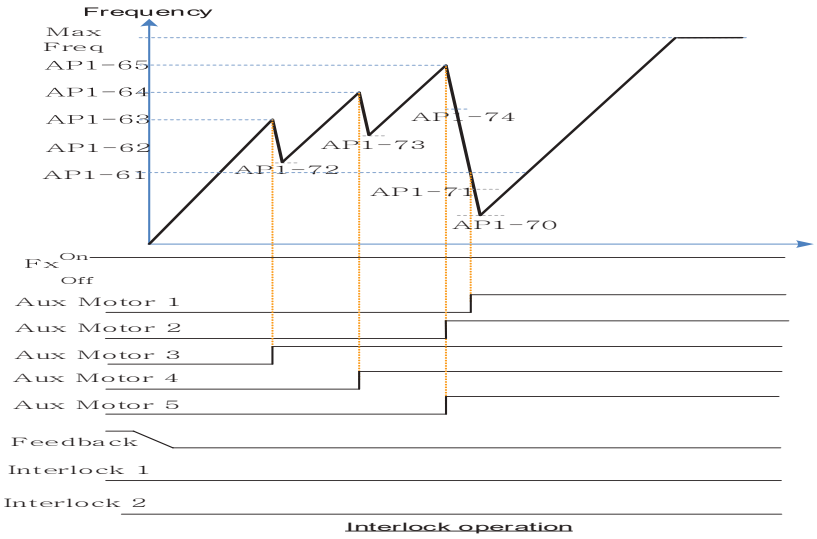

Interlock operation

In case that Operable Motor and Standby Motor are set to 3 and 2 each, it operates in the order of "Aux Motor 2 ←→ Aux Motor 4 ←→ Aux Motor 5".

5.44.5 Aux Motor Time Change

It is used to set a motor to the smallest number among Drives not inter-locked by [AP1-43 Starting Aux] and place others in order based on it when operating time of every motor is deleted through <1:All> of [AP1-98 AuxRunTime Clr].

In case that operating time of each motor is deleted through <2: Aux1> ~ <6: Aux5> of [AP1-98 AuxRunTime Clr] or changed by combining [AP1-96 AuxRunTime Day] and [AP1-97 AuxRunTime Min], motor stopped changes the priority with motor stopped as operating motor does with operating motor.

The table below shows the case to change the operating time of Aux Motor2 running on the same condition of Sequence1.

Sequences	Aux Priority 1 (Operating time: min)	Aux Priority 2 (Operating time: min)	Aux Priority 3 (Operating time: min)	Aux Priority 4 (Operating time: min)	Aux Priority 5 (Operating time: min)
1	Aux Motor3 (00:30) <Operating>	Aux Motor2 (00:40) <Operating>	Aux Motor1 (00:50) <Operating>	Aux Motor4 (01:30) <Operating>	Aux Motor 5 (01:50) <Operating>
Set <3 Aux2of [AP1-98 AuxRunTime Clr]					
2	Aux Motor2 (00:00) <Operating>	Aux Motor3 (00:30) <Operating>	Aux Motor1 (00:50) <Operating>	Aux Motor4 (01:30) <Operating>	Aux Motor 5 (01:50) <Operating>
Set time of Aux2to 2:00 through [AP1-97 AuxRunTime Min]					
3	Aux Motor3 (00:30) <Operating>	Aux Motor1 (00:50) <Operating>	Aux Motor2 (02:00) <Operating>	Aux Motor4 (01:30) <Stopping>	Aux Motor 5 (01:50) < Stopping >

The table below shows the case to change the operating time of Aux Motor5 stopped on the same condition of Sequence1

Sequences	Aux Priority 1 (Operating time: min)	Aux Priority 2 (Operating time: min)	Aux Priority 3 (Operating time: min)	Aux Priority 4 (Operating time: min)	Aux Priority 5 (Operating time: min)
1	Aux Motor3 (00:30) <Operating>	Aux Motor2 (00:40) <Operating>	Aux Motor1 (00:50) <Operating>	Aux Motor4 (01:30) <Stopping>	Aux Motor 5 (01:50) <Stopping>
Set <6: Aux5> of [AP1-98 AuxRunTime Clr]					
2	Aux Motor3 (00:30) <Operating>	Aux Motor2 (00:40) <Operating>	Aux Motor1 (00:50) <Operating>	Aux Motor 5 (0) <Stopping>	Aux Motor 4 (01:30) <Stopping>
Set time of Aux5 to 2:00 through [AP1-97 AuxRunTime Min]					
3	Aux Motor3 (00:30) <Operating>	Aux Motor2 (00:40) <Operating>	Aux Motor1 (00:50) <Operating>	Aux Motor4 (01:30) <Stopping>	Aux Motor 5 (02:00) <Stopping>

5.44.6 Regular Bypass

This function controls the motor speed based on the feedback amount instead of using the PID. Auxiliary motors may be controlled with this feature based on the feedback amount.

Group	Code	Name	LCD Display	Parameter Setting		Setting Range		Unit
AP1	41	Bypass selection	Regul Bypass	1		0	No	-
						1	Yes	
	61–65	#1–5 auxiliary motor start frequency	Start Freq 1–5	Frequency value within the range		Freq Low Limit–Freq High limit		Hz
	70–74	#1–5 auxiliary motor stop frequency	Stop Freq 1–5	Frequency value within the range		Low Freq–High Freq		Hz
OUT	31–35	Multi-function relay1–5	Relay 1–5	21	Multiple motor control(MMC)	-		-
	36	Multi-function 1 item	Q1 Define	40	KEB Operation	-		-

Regular Bypass Detail Settings

Code	Description
AP1-41 Regular Bypass	Sets the regular bypass mode. Mode: 0 = No; 1 = Yes
AP1-61–65 Start Freq 1–5	Sets the auxiliary motor start frequency.
AP1-70–74 Stop Freq 1–5	Sets the auxiliary motor stop frequency.
OUT-31–35 Relay 1–5 OUT-36 Q1 Define	Set OUT31–35 to '21 (MMC)' to use the out terminal for auxiliary motor operation. The number of configured output terminals determines the total number of auxiliary motors to be used.

When an input set by the PID feedback of the analog input terminal (I or V1 or Pulse) is 100%, divide the area by the number of motors being used (including the main motor). Each auxiliary motor turns on when feedback reaches the relevant level and turns off when feedback goes below the relevant level. The primary motor increases its speed based on the feedback and when it reaches the start frequency of the relevant auxiliary motor and decelerates to the stop frequency.

The primary motor reaccelerates when the frequency increases, depending on the feedback increase. If the relevant auxiliary motor is turned off because of the feedback decrease, the primary motor accelerates from the stop frequency to the start frequency.

To use the regular bypass function, '1 (Yes)' has to be selected in the MMC and PID functions. Only FILO operates between the AP1-49 (FIFO/FILO) in a regular bypass function.

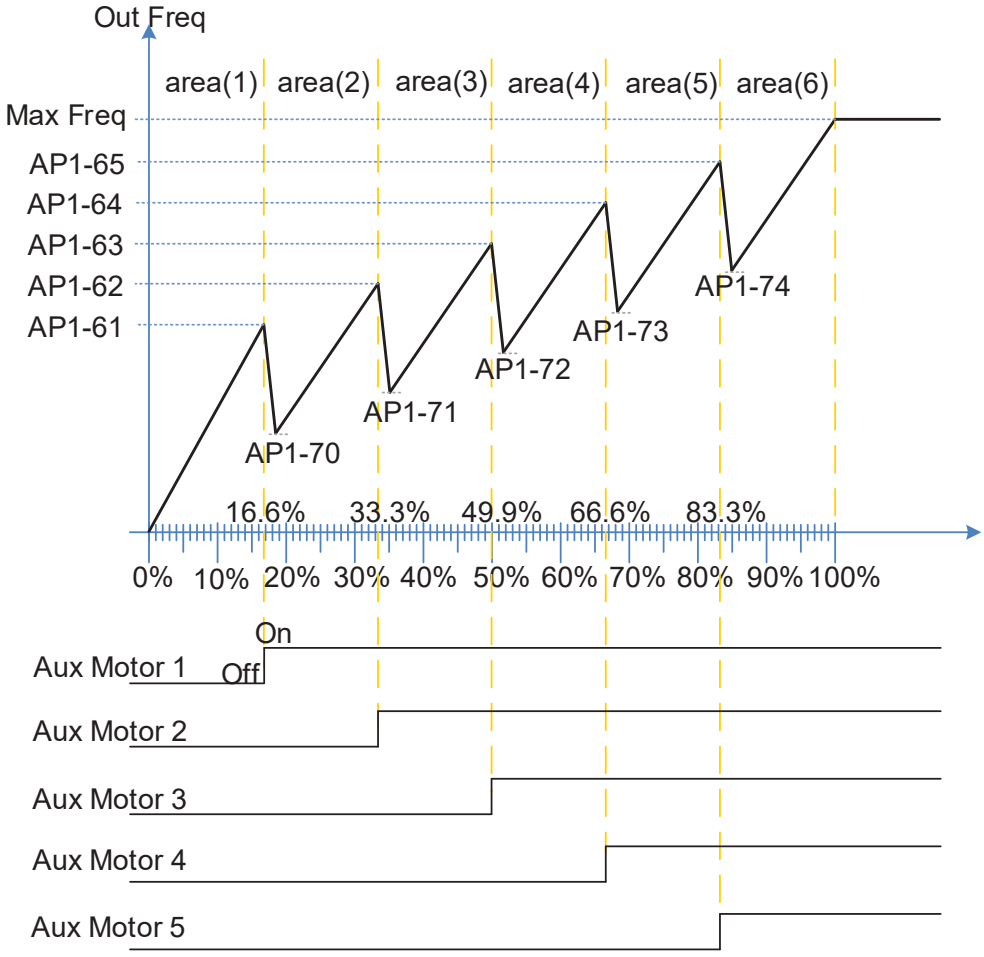

Regular ByPass

5.44.7 Aux Motor PID Compensation

When the number of operating auxiliary motors increases, the flow rate of the pipe also increases and the pressure of the pipe line decreases. Aux motor PID compensation compensates for this pressure when the number of the auxiliary motor increases. By adding the additional PID reference value (relevant to the auxiliary motor) to the current reference, the loss of pressure can be compensated for.

Auxiliary PID Compensation Detailed Settings

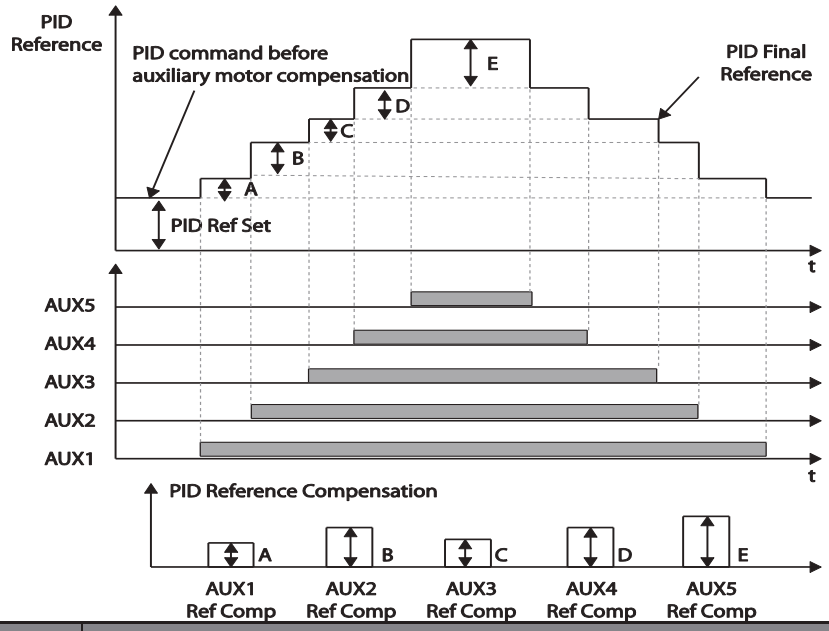

Code	Description
AP1-80–84 Aux 1–5 Ref Comp	Set the relevant PID reference compensation rate whenever the auxiliary motor is turned on. The PID reference can be set over 100%, but when it exceeds 100%, the maximum value of the PID reference is limited to 100%. Unit band value is the value between unit 100%–0%.

< Auxiliary motor PID compensation>

NOTE

When the aux reference value is set to 100%, the final PID reference becomes 100%. In this case, output frequency of the inverter does not decelerate because the PID output does not decelerate even if the input feedback value is 100%.

5.44.8 Master Follower

It is used to control multiple inverters with an inverter. When [AP1-40 MMC Sel] is set to <2 : Multi Follower> or <3 : Multi Master>, it is called as {Leader Drive}. The rest inverters set to <4 : Serve Drv> are called as {Serve Drive}.

Leader Drive

It is an inverter to execute PID control with PID Feedback from sensor, control Multi Motor and function as Master of communication.

In addition, if it is set to Leader Drive, Drive turned on at first performs functions of Soft Fill(Pre-PID), Sleep/WakeUp and Aux Motor PID Compensation).

Serve Drive

It is an inverter to operate motors with Leader Drive.

Each inverter and motor has the same number(ID), [COM-01 Int485 St ID].

Among the operating motors, the motor with the lowest priority is called Main Motor and the rest of motors are called as Aux Motor.

※In case that every motor is stopped, the motor with the highest priority is called as Main Motor.

This is, Main Motor and Aux Motor are changed according to the situation and Leader Drive and Serve Drive are fixed.

The picture below represents foundational composition.

www.nicsanat.com
021-87700210
NIC SANAT
نیک صنعت

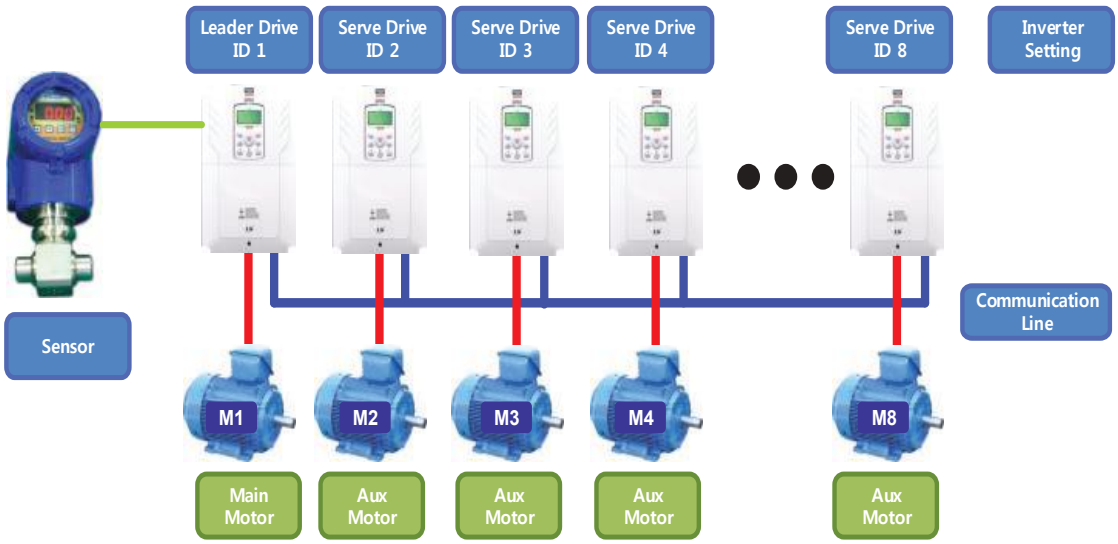

5.44.8.1 Multi Mater Mode

Only Main Motor can be controlled by PID and Aux Motor performs the operating mode with Follower Freq.

The picture below shows that the priority is"Motor1 (M1)←→Motor2 (M2)←→Motor3 (M3)".

(The priority can be changed automatically according to operating time)

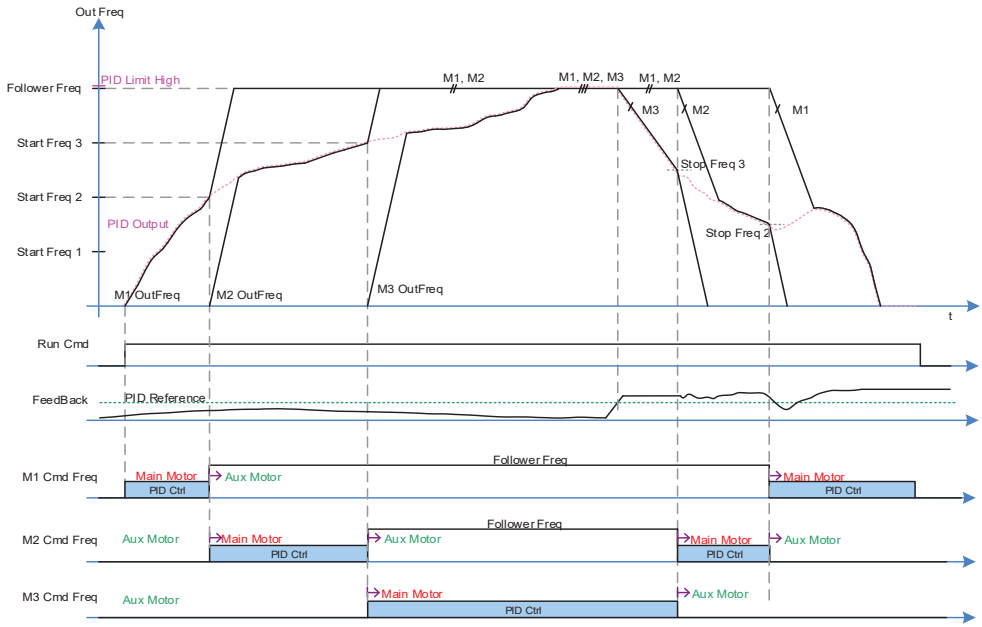

A condition that extra Aux Motor is turned on .

After a real operating frequency reaches the frequency set in Start Freq belonging to the next priority number and the time set in AP1-53(Aux Start DT) passes, AP1-44(Aux Motor Run) increases (+1) and it becomes Aux Motor, accelerating based on time of [DRV-03 Acc Time]/[DRV-04 Dec Time] until [AP1-60 Follower Freq].

At the same time, as an inverter corresponding to the next priority is turned on, the motor becomes Main Motor(available PID control). It is possible to check the priority in [AP1-45/46 Aux Priority].

A condition that Aux Motor is turned off.

If the real operating frequency of Main Motor is lower than the frequency set in Stop Freq, AP1-44(Aux Motor Run) decreases(-1) after the time set in AP1-54(Aux Stop DT) and the present Main Motor becomes Aux Motor, decelerating based on time of [DRV-04 Dec Time] until 0Hz.

At the same time, the motor corresponding to the previous priority becomes Main Motor(available PID control). It is possible to check the priority in [AP1-45/46 Aux Priority].

5.44.8.2 Multi Follower Mode

It is a mode to control motors turned on with the same PID output frequency.

The picture below shows that the priority is "Motor1 (M1)←→Motor2 (M2)←→Motor3 (M3)".

(The priority can be changed automatically according to operating time).

www.nicsanat.com
021-87700210
NIC SANAT
نیک صنعت

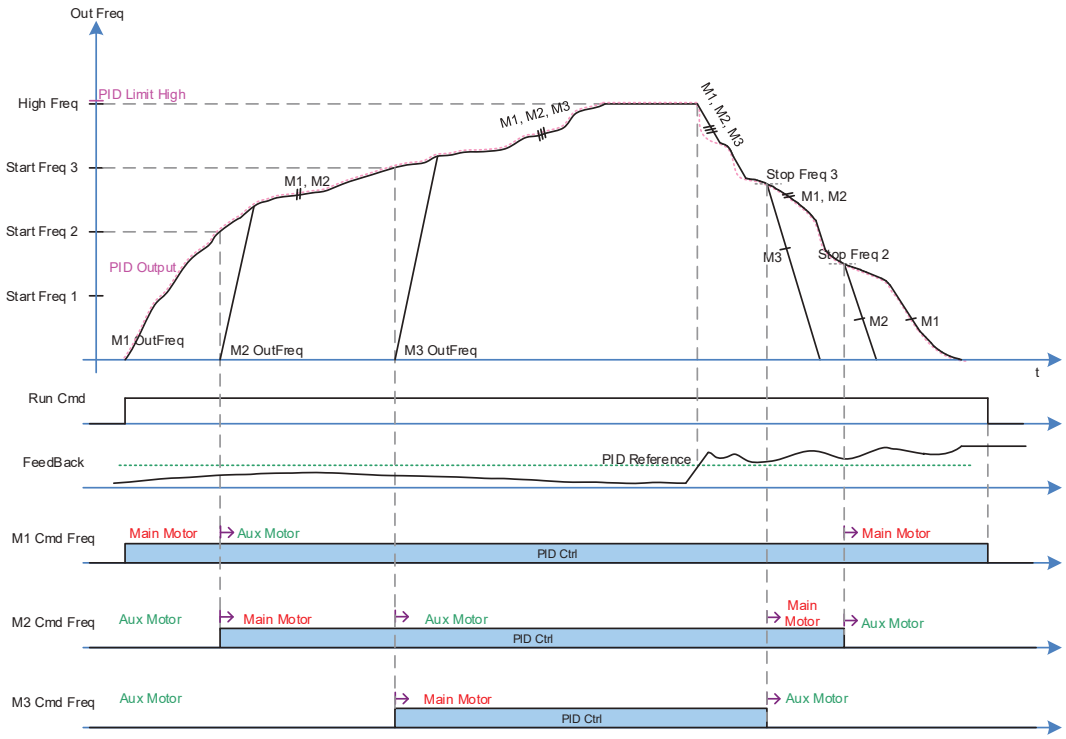

A condition that extra Aux Motor is turned on .

After a real operating frequency reaches the frequency set in Start Freq belonging to the next priority number and the time set in AP1-53(Aux Start DT) passes, AP1-44(Aux Motor Run) increases (+1). In addition, Aux Motor with the next priority of Main Motor is turned on and the new operating Aux Motor becomes Main Motor. Operating motors can be controlled together by PID. It is possible to check the priority in [AP1-45/46 Aux Priority].

A condition that Aux Motor is turned off.

If the real operating frequency of Main Motor is lower than the frequency set in Stop Freq, AP1-44(Aux Motor Run) decreases(-1) after the time set in AP1-54(Aux Stop DT) and the present Main Motor becomes Aux Motor, decelerating based on time of [DRV-04 Dec Time] until 0Hz.

At the same time, the rest of operating motors last PID control. It is possible to check the priority in [AP1-45/46 Aux Priority].

5.44.8.3 Re-arrangement of priority based on operating time.

The priority of each Motor is arranged automatically based on operating time.

Among operating Motors, Motor with the longest operating time is placed at the last.
The moment for the priority arrangement is the time when the number of motor is changed.

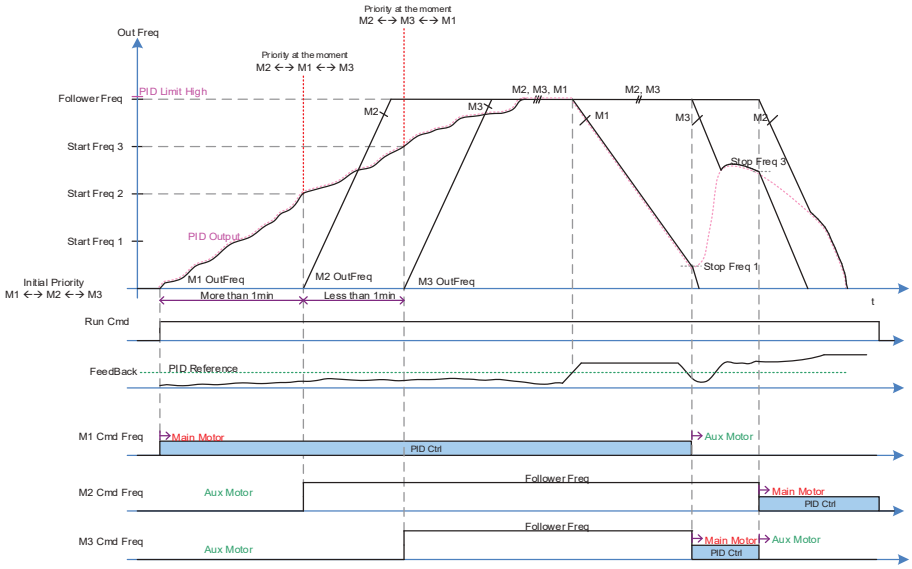

The picture below shows the operating time of M1 is the longest during Multi Follower Mode.

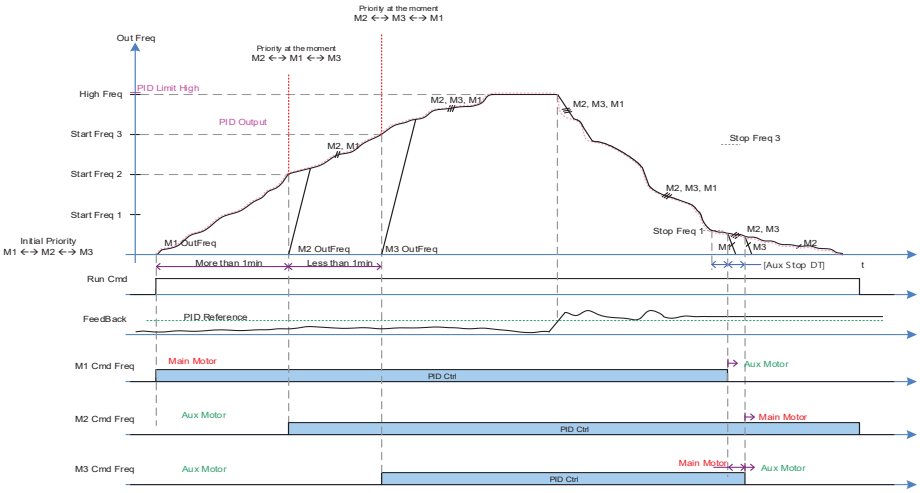

The conditions that Aux Motor is turned on and off are same as the description of Multi Master Mode and Multi Follower Mode.

5.44.8.4 Master Follower Interlock

As Interlock signals are sent from Serve Drive, Leader Drive puts together through Communication Line. Every Trip such as HAND State or OFF State of Serve Drive is processed by Interlock in Leader Drive .

This is, other Server Drives keep performing Master Follower function except the cases that it is in HAND/OFF State or there are trips

If Leader Drive is HAND State or OFF state, Master Follower system is not activated.

In case that Pipe Broken and Interlock Trip are caused in Leader Drive, every drive operating is stopped and Master Follower keeps performing the function except Leader Drive if there is another Trip.

(Leader Drive executes PID control and overall system control consistently.)

In this operating priority (M1 ↔ M2 ↔ M3 ↔ M4 ↔ M5 ↔ M6 ↔ M7 ↔ M8), if interlock3 or any trip and HAND/OFF State are caused, the motor is activated in this order(M1 ↔ M2 ↔ M4 ↔ M5 ↔ M6 ↔ M7 ↔ M8).

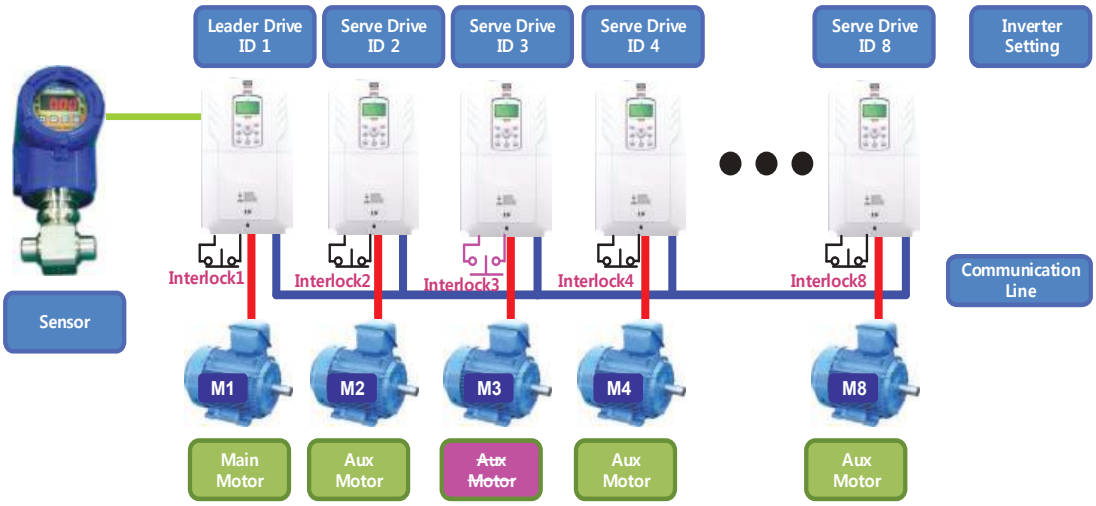

The picture below shows the function in case that M3 becomes HAND/OFF State or interlock and Trip are caused.(supposing that the priority is not changed),(interlock is the function corresponding to B terminal(Normal close)).

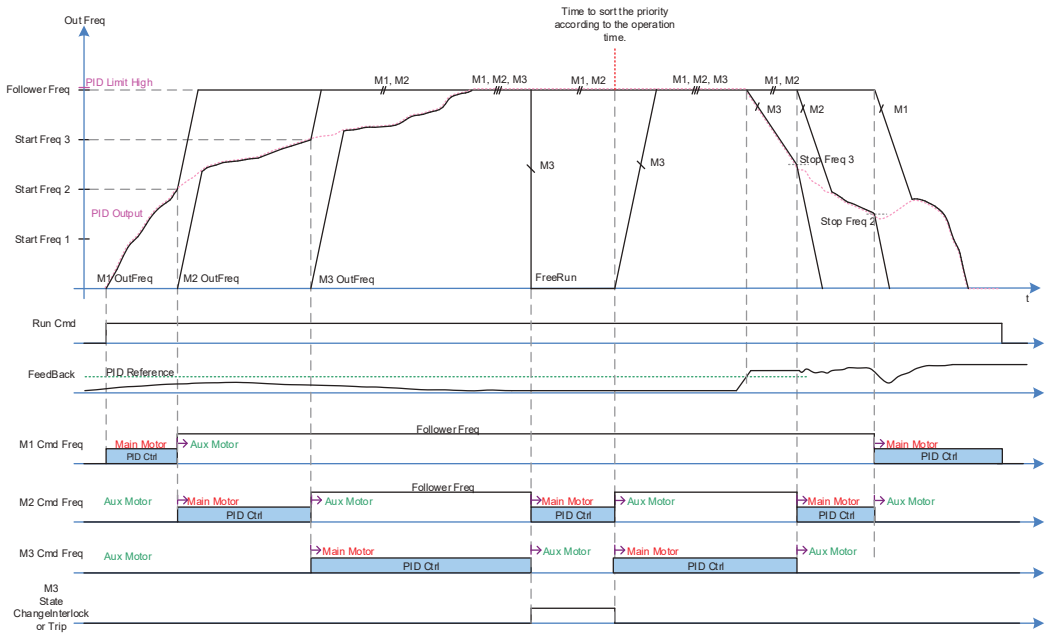

5.45 Multi-function Output On/Off Control

Set reference values (on/off level) for analog input and control output relay or multi-function output terminal on/off status accordingly.

Group	Code	Name	LCD Display	Parameter Setting		Setting Range	Unit
ADV	66	Output terminal on/off control mode	On/Off Ctrl Src	1	V1	0–8	-
	67	Output terminal on level	On-C Level	90.00		Output terminal off level–100.00%	%
	68	Output terminal off level	Off-C Level	10.00		0.00–Output terminal on level	%
OUT	31	Multi-function relay 1 item	Relay 1	26	On/Off	-	-
	33	Multi-function output 1 item	Q1 Define				

Multi-function Output On/Off Control Setting Details

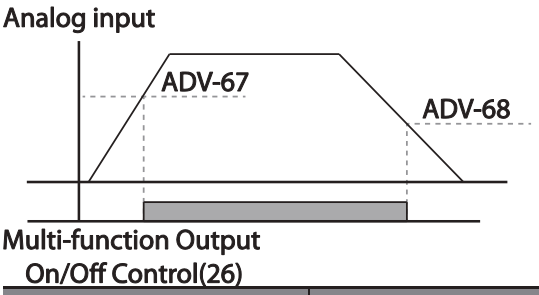

Code	Description
ADV-66 OnOff Ctrl Src	Select analog input On/Off control.
ADV-67 On Ctrl Level , ADV-68 Off Ctrl Level	Set On/Off level at the output terminal.

5.46 Press Regeneration Prevention

Press regeneration prevention is used during press operations to prevent braking during the regeneration process. If motor regeneration occurs during a press operation, motor operation speed automatically goes up to avoid the regeneration zone.

Group	Code	Name	LCD Display	Parameter Setting		Setting Range	Unit
ADV	74	Select press regeneration prevention for press	RegenAvd Sel	0	No	0–1	-
	75	Press regeneration prevention operation voltage level	RegenAvd Level	350 V		200 V class: 300–400 V	V
				700 V		400 V class: 600–800 V	
	76	Press regeneration prevention compensation	CompFreq Limit	1.00 (Hz)		0.00–10.00 Hz	Hz

Group	Code	Name	LCD Display	Parameter Setting	Setting Range	Unit
		frequency limit				
	77	Press regeneration prevention P-Gain	RegenAvd Pgain	50.0 (%)	0 .0–100.0%	%
	78	Press regeneration prevention I gain	RegenAvd Igain	500 (ms)	20–30000 ms	ms

Press Regeneration Prevention Setting Details

Code	Description
ADV-74 RegenAvd Sel	Frequent regeneration voltage from a press load during a constant speed motor operation may force excessive stress on the brake unit, which may damage or shorten brake life. To prevent this, select ADV-74 (RegenAvd Sel) to control DC link voltage and disable the brake unit operation.
ADV-75 RegenAvd Level	Set brake operation prevention level voltage when the DC link voltage goes up due to regeneration.
ADV-76 CompFreq Limit	Set an alternative frequency width that can replace actual operation frequency during regeneration prevention.
ADV-77 RegenAvd Pgain ADV-78 RegenAvd Igain	To prevent regeneration zone, set P-Gain/I gain in the DC link voltage suppress PI controller.

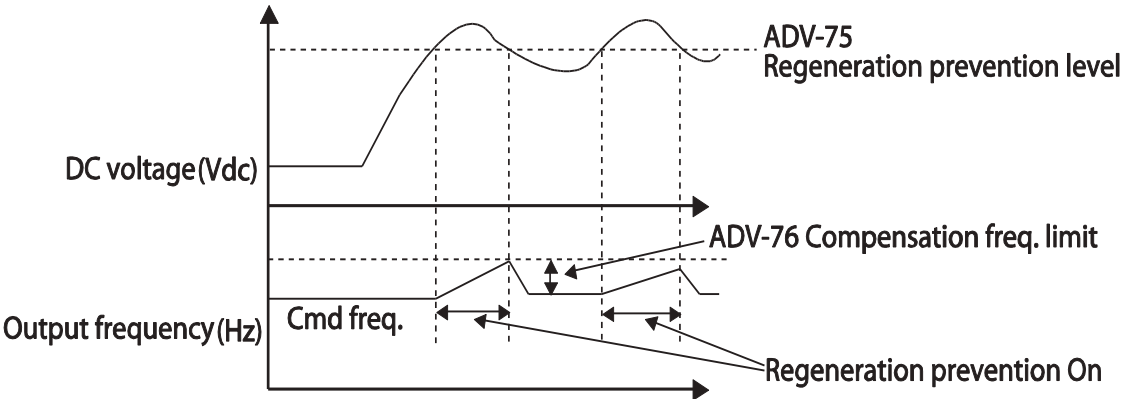

Note

Press regeneration prevention does not operate during accelerations or decelerations; it only operates during constant speed motor operation. When regeneration prevention is activated, output frequency

may change within the range set at ADV-76 (CompFreq Limit).

5.47 Analog Output

An analog output terminal provides an output of 0–10 V voltage, 4–20 mA current, or 0–32 kHz pulse.

5.47.1 Voltage and Current Analog Output

An output size can be adjusted by selecting an output option at the AO (Analog Output) terminal. Set the analog voltage/current output terminal setting switch (SW5) to change the output type (voltage/current).

OUT	01	Analog output1	AO1 Mode	0	Frequency	0–15	-
	02	Analog output1 gain	AO1 Gain	100.0		-1000.0–1000.0	%
	03	Analog output1 bias	AO1 Bias	0.0		-100.0–100.0	%
	04	Analog output1 filter	AO1 Filter	5		0–10000	ms
	05	Analog constant output1	AO1 Const %	0.0		0.0–100.0	%
	06	Analog output1 monitor	AO1 Monitor	0.0		0.0–1000.0	%

www.nicsanat.com
021-87700210
NIC SANAT
نیک صنعت

www.nicsanat.com
021-87700210
NIC SANAT
نیک صنعت

OUT-01 AO1 Mode	Select a constant value for output. The following example for output voltage setting.

Setting		Function
0	Frequency	Outputs operation frequency as a standard. 10 V output is made from the frequency set at DRV-20 (Max Freq).
1	Output Current	10 V output is made from 150% of inverter rated current.
2	Output Voltage	Sets the outputs based on the inverter output voltage. 10 V output is made from a set voltage in BAS-15 (Rated V). If 0 V is set in BAS-15, 200 V/400 V models output 10 V based on the actual input voltages (240 V and 480 V respectively).
3	DC Link Volt	Outputs inverter DC link voltage as a standard. Outputs 10 V when the DC link voltage is 410 V DC for 200 V models, and 820 V DC for 400 V models.
4	Output Power	Monitors output wattage. 150% of rated output is the maximum display voltage (10 V).
7	Target Freq	Outputs set frequency as a standard. Outputs 10 V at the maximum frequency (DRV-20).
8	Ramp Freq	Outputs frequency calculated with Acc/Dec function as a standard. May vary with actual output frequency. Outputs 10 V.
9	PID Ref Value	Outputs command value of a PID controller as a standard. Outputs approximately 6.6 V at 100%.
10	PID Fdk Value	Outputs feedback volume of a PID controller as a standard. Outputs approximately 6.6 V at 100%.
11	PID Output	Outputs output value of a PID controller as a standard. Outputs approximately 10 V at 100%.
12	Constant	Outputs OUT-05 (AO1 Const %) value as a standard.
13	EPID1 Output	Output is based on the output value of the external PID1 controller. Outputs 10 V in 100%.

14	EPID Ref Val	Output is based on the reference value of the external PID1 controller. Outputs 6.6 V in 100%.
15	EPID Fdb Val	Output is based on the feedback amount of the external PID1 controller. Outputs 6.6 V in 100%.

OUT-02 AO1 Gain, OUT-03 AO1 Bias

Adjusts output value and offset. If frequency is selected as an output item, it will operate as shown below.

$$AO1 = \frac{Frequency}{MaxFreq} \times AO1\ Gain + AO1\ Bias$$

The graph below illustrates how the analog voltage output (AO1) changes depending on OUT-02 (AO1 Gain) and OUT-3 (AO1 Bias) values. The Y-axis is analog output voltage (0–10 V), and the X-axis is a % value of the output item.

Example, if the maximum frequency set at DRV-20 (Max Freq) is 60 Hz and the present output frequency is 30 Hz, then the x-axis value on the next graph is 50%.

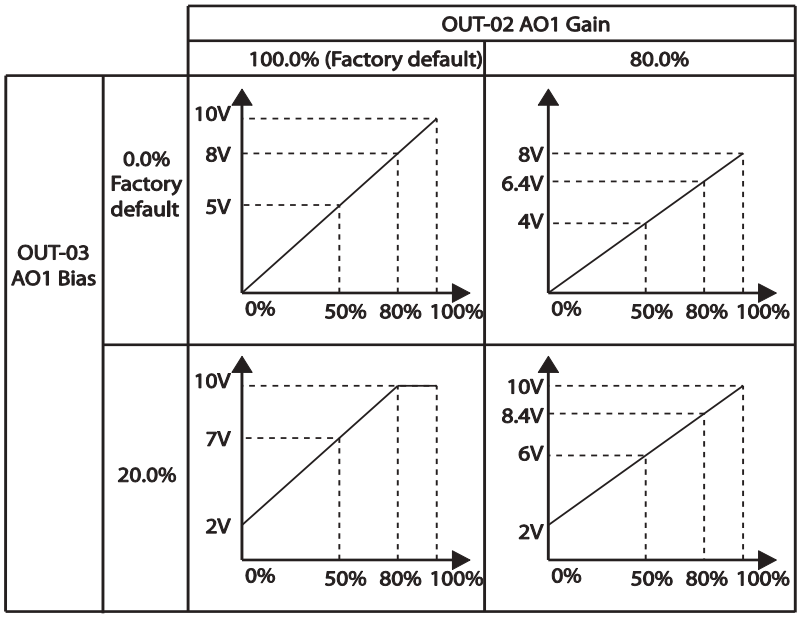

OUT-04 AO1 Filter	Set filter time constant on analog output.
OUT-05 A01 Const %	If the analog output at OUT-01 (AO1 Mode) is set to '12 (Constant)', the analog voltage output is dependent on the set parameter values (0–100%).
OUT-06 AO1	Monitors the analog output value. Displays the maximum output voltage as a

Monitor	percentage (%) with 10 V as the standard.

Voltage and Current Analog Output Setting Details

5.47.2 Analog Pulse Output

Output item selection and pulse size adjustment can be made for the TO (Pulse Output) terminal.

Group	Code	Name	LCD Display	Parameter Setting	Setting Range	Unit
OUT	61	Pulse output setting	TO Mode	0 Frequency	0–15	-
	62	Pulse output gain	TO Gain	100.0	-1000.0–1000.0	-
	63	Pulse output bias	TO Bias	1000.0	-100.0–100.0	-
	64	Pulse output filter	TO Filter	5	0–10000	-
	65	Pulse output constant output2	TO Const %	0.0	0.0–100.0	%
	66	Pulse output monitor	TO Monitor	0.0	0–1000.0	%

Analog Pulse Output Setting Details

Code	Description
OUT-62 TO Gain, OUT-63 TO Bias	Adjusts output value and offset. If frequency is selected as an output, it will operate as shown below. $$TO = \frac{Frequency}{MaxFreq} \times TO\ Gain + TO\ Bias$$ The following graph illustrates that the pulse output (TO) changes depend on OUT-62 (TO Gain) and OUT-63 (TO Bias) values. The Y-axis is an analog output current (0–32 kHz), and X-axis is a % value of the output item. For example, if the maximum frequency set at DRV-20 (Max Freq) is 60 Hz and present output frequency is 30 Hz, then the x-axis value on the next

	graph is 50%. 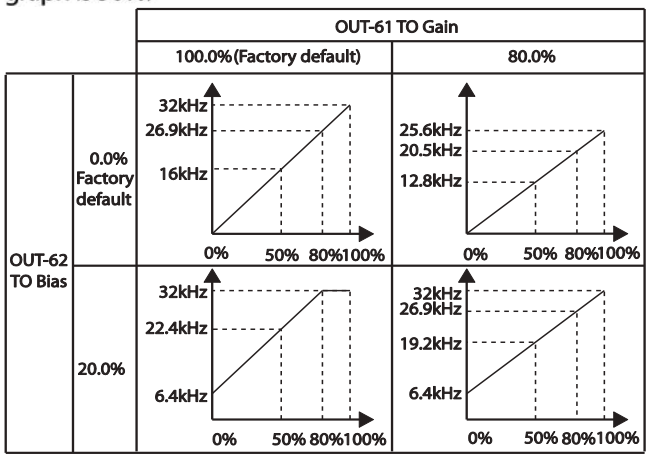
OUT-64 TO Filter	Sets filter time constant on analog output.
OUT-65 TO Const %	If the analog output item is set to constant, the analog pulse output is dependent on the set parameter values.
OUT-66 TO Monitor	Monitors the analog output value. It displays the maximum output pulse (32 kHz) as a percentage (%) of the standard.

www.nicsanat.com
021-87700210
NIC SANAT
نیک صنعت

www.nicsanat.com
021-87700210
NIC SANAT
نیک صنعت

NOTE

OUT-08 AO2 Gain and OUT-09 AO2 Bias Tuning Mode on 0–20 mA output

1. Set OUT-07 (AO2 Mode) to 'constant' and set OUT-11 (AO2 Const %) to 0.0 %.
2. Set OUT-09 (AO2 Bias) to 20.0% and then check the current output. 4 mA output should be displayed.
   - If the value is less than 4 mA, gradually increase OUT-09 (AO2 Bias) until 4 mA is measured.
   - If the value is more than 4 mA, gradually decrease OUT-09 (AO2 Bias) until 4 mA is measured.
3. Set OUT-11 (AO2 Const %) to 100.0%.
4. Set OUT-08 (AO2 Gain) to 80.0% and measure the current output at 20 mA.
   - If the value is less than 20 mA, gradually increase OUT-08 (AO2 Gain) until 20 mA is measured.
   - If the value is more than 20 mA, gradually decrease OUT-08 (AO2 Gain) until 20 mA is measured.

The functions for each code are identical to the descriptions for the 0–10 V voltage outputs with an output range 4–20 mA.

5.48 Digital Output

5.48.1 Multi-function Output Terminal and Relay Settings

Group	Code	Name	LCD Display	Parameter Setting		Setting Range	Unit
OUT	31	Multi-function relay 1 setting	Relay 1	23	Trip	-	-
	32	Multi-function relay 2 setting	Relay 2	14	Run	-	-
	33	Multi-function relay 3 setting	Relay 3	0	None	-	-
	34	Multi-function relay 4 setting	Relay 4	0	None	-	-
	35	Multi-function relay 5 setting	Relay 5	0	None	-	-
	36	Multi-function output setting	Q1 define	0	None	-	-
	41	Multi-function output monitor	DO Status	-		00–11	bit
	57	Detection frequency	FDT Frequency	30.00		0.00–Maximum frequency	Hz
	58	Detection frequency band	FDT Band	10.00			
IN	65–71	Px terminal configuration	Px Define	18	Exchange	0-55	-

Multi-function Output Terminal and Relay Setting Details

Code	Description	
OUT-31–35 Relay1–5	Set relay (Relay 1–5) output options.	
	Setting	Function

0	None	No output signal
1	FDT-1	Detects inverter output frequency reaching the user set frequency. Outputs a signal when the absolute value (set frequency–output frequency) < detected frequency width/2. When the detected frequency width is 10 Hz, FDT-1 output is as shown in the graph below. 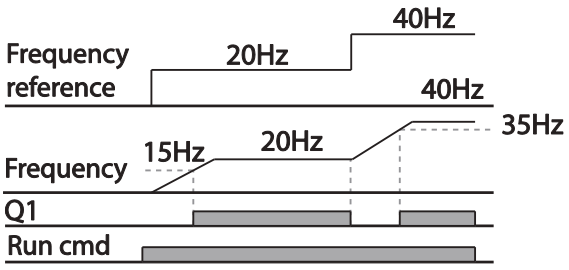
2	FDT-2	Outputs a signal when the user-set frequency and detected frequency (FDT Frequency) are equal, and fulfills FDT-1 condition at the same time. [Absolute value (set frequency-detected frequency) < detected frequency width/2 & FDT-1] Detected frequency width is 10 Hz. When the detected frequency is set to 30 Hz, FDT-2 output is as shown in the graph below. 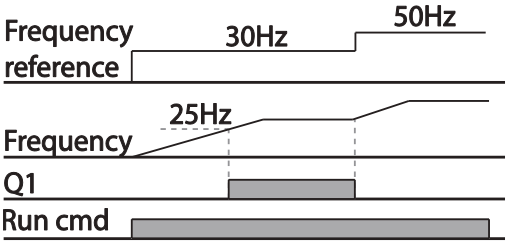
3	FDT-3	Outputs a signal when the Absolute value (output frequency–operation frequency) < detected frequency width/2. Detected frequency width is 10 Hz. When the detected frequency is set to 30 Hz, FDT-3 output is as shown in the graph below.

		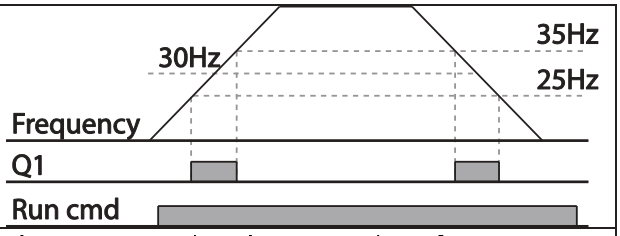
4	FDT-4	The output signal can be separately set for acceleration and deceleration conditions. • **In acceleration:** Operation frequency ≧ Detected frequency • **In deceleration:** Operation frequency > (Detected frequency–Detected frequency width/2) Detected frequency width is 10 Hz. When the detected frequency is set to 30 Hz, FDT-4 output is as shown in the graph below. 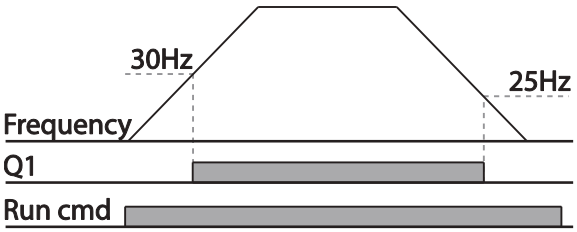
5	Over Load	Outputs a signal at motor overload.
6	IOL	Outputs a signal when the inverter input current exceeds the rated current and a protective function is activated to prevent damage to the inverter, based on inverse proportional characteristics.
7	Under Load	Outputs a signal at load fault warning.
8	Fan Warning	Outputs a signal at fan fault warning.
9	Stall	Outputs a signal when a motor is overloaded and stalled.
10	Over Voltage	Outputs a signal when the inverter DC link voltage rises above the protective operation voltage.
11	Low Voltage	Outputs a signal when the inverter DC link voltage drops below the low voltage protective level.
12	Over Heat	Outputs signal when the inverter overheats.
13	Lost Command	Outputs a signal when there is a loss of analog input terminal and RS-485 communication command at the terminal block.

		Outputs a signal when communication power is present and an I/O expansion card is installed. It also outputs a signal when losing analog input and communication power commands.
14	RUN	Outputs a signal when an operation command is entered and the inverter outputs voltage. No signal output during DC braking. 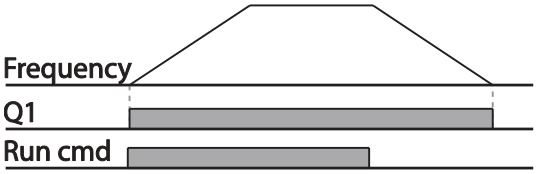
15	Stop	Outputs a signal at operation command off, and when there is no inverter output voltage.
16	Steady	Outputs a signal in steady operation.
17	Inverter Line	Outputs a signal while the motor is driven by the inverter line.
18	Comm Line	Outputs a signal when multi-function input terminal (switching) is entered. For details, refer to *5.31Supply Power Transition* page on *253.*
19	Speed Search	Outputs a signal during inverter speed search operation. For details, refer to *5.27Speed Search Operation* on page *243.*
20	Ready	Outputs a signal when the inverter is in stand by mode and ready to receive external operation commands.
21	MMC	Used as a multi-motor control function. By configuring the relay output and the multi-function output to MMC and configuring the AP1-40–AP1-92, it can conduct the necessary operations for multi-motor control function.
22	Timer Out	A timer function to operate terminal output after a certain time by using multi-function terminal block input. For details, refer to 5.43*Timer* Settings on page 265.
23	Trip	Outputs a signal after a fault trip. Refer to 5.45 Multi-function Output On/Off Control on page 259 .
25	DB Warn %ED	Refer to 0. Dynamic Braking (DB) Resistor Configuration on page 295.

	26	On/Off Control	Outputs a signal using an analog input value as a standard. Refer to 5.45 Multi-function Output On/Off Control on page 259 .
	27	Fire Mode	Outputs a signal when Fire mode is in operation.
	28	Pipe Break	Outputs a signal when a pipe is broken.
	29	Damper Err	Outputs a signal when damper open signal is not entered. For more details, refer to 0 *Damper* Operation on page *194.*
	30	Lubrication	Outputs a signal when a lubrication function is in operation.
	31	PumpClean Sel	Outputs a signal when a pump cleaning function is in operation.
	32	LDT Trip	Outputs a signal when an LDT trip occurs.
	33	Damper Control	Outputs a signal when a damper open signal is set at IN-65–71 multi-function terminals and run command is on.
	34	CAP.Warning	Outputs a signal when value of the PRT-85 is lower than the value of the PRT-86 (CAP life cycle examination do not operate properly).
	35	Fan Exchange	Outputs a signal when fan needs to be replaced.
	36	AUTO State	Outputs a signal in AUTO mode.
	37	HAND State	Outputs a signal in HAND mode.
	38	TO	Outputs a signal at pulse output.
	39	Except Date	Outputs a signal when operating the exception day schedule.
	40	KEB Operating	Outputs a signal at KEB operation.
	41	BrokenBelt	Outputs a signal when a Broken belt is in operation.
OUT-36 Q1 Define	Select an output item for the multi-function output terminal (Q1) of the terminal block. Q1 stands for the open collector TR output.		
OUT-41 DO State	Used to check On/Off state of the D0 by each bit.		

ⓘ Caution

- FDT-1 and FDT-2 functions are related to the frequency setting of the inverter. If the inverter enters standby mode by pressing the off key during auto mode operation, FDT-1 and FDT-2 function operation may be different because the set frequency of the inverter is different compared to the set frequency of the auto mode.

- If monitoring signals such as 'Under load' or 'LDT' are configured at multi-function output terminals, signal outputs are maintained unless certain conditions defined for signal cutoff are met.

5.48.2 Fault Trip Output using Multi-function Output Terminal and Relay

The inverter can output a fault trip state using the multi-function output terminal (Q1) and relay (Relay 1).

	30	Fault trip output mode	Trip Out Mode	010		-	bit
	31	Multi-function relay 1	Relay 1	23	Trip	-	-
	32	Multi-function relay 2	Relay 2	14	Run	-	-
	33	Multi-function relay 3	Relay 3	0	none	-	
OUT	34	Multi-function relay 4	Relay 4	0	none	-	
	35	Multi-function relay 5	Relay 5	0	none	-	
	36	Multi-function output1	Q1 Define	0	none	-	-
	53	Fault trip output on delay	TripOut OnDly	0.00		0.00–100.00	sec
	54	Fault trip output off delay	TripOut OffDly	0.00		0.00–100.00	sec

www.nicsanat.com
021-87700210
NIC SANAT
نیک صنعت

Fault Trip Output by Multi-function Output Terminal and Relay - Setting Details

OUT-30 Trip Out Mode	Fault trip relay operates based on the fault trip output settings. Item: Keypad display — bit on: ▮ — bit off: ▯ Select a fault trip output terminal/relay and select '29' (Trip Mode) at codes OUT- 31–33. When a fault trip occurs in the inverter, the relevant terminal and relay will operate. Depending on the fault trip type, terminal and relay operation can be configured as shown in the table below. Setting (bit3, bit2, bit1) — Function bit1 ✓: Operates when low voltage fault trips occur bit2 ✓: Operates when fault trips other than low voltage occur bit3 ✓: Operates when auto restart fails (PRT-08–09)
OUT-31–35 Relay1–5	Set relay output (Relay 1–5).
OUT-36 Q1 Define	Select output for multi-function output terminal (Q1). Q1 is open collector TR output.

5.48.3 Multi-function Output Terminal Delay Time Settings

Set on-delay and off-delay times separately to control the output terminal and relay operation times. The delay time set at codes OUT-50–51 applies to multi-function output terminal (Q1) and relay, except when the multi-function output function is in fault trip mode.

OUT	50	Multi-function output On delay	DO On Delay	0.00	0.00–100.00	sec
	51	Multi-function output Off delay	DO Off Delay	0.00	0.00–100.00	sec
	52	Select multi-function output terminal	DO NC/NO Sel	000000*	00–11	bit

*Multi-function output terminals are numbered. Starting from the right (number 1), the number increases to the left.

www.nicsanat.com
021-87700210
NIC SANAT
نیک صنعت

Output Terminal Delay Time Setting Details

Code	Description
OUT-50 DO On Delay	When a relay operation signal (operation set in OUT 31–35, 36) occurs, the relay turns on or the multi-function output operates after the time delay set at OUT-50.
OUT-51 DO Off Delay	When relay or multi-function output is initialized (off signal occurs), the relay turns off or multi-function output turns off after the time delay set at OUT-54.
OUT-52 DO NC/NO Sel	Select the terminal type for the relay and multi-function output terminal. By setting the relevant bit to '0,' it will operate A terminal (Normally Open). Setting it to '1' will operate B terminal (Normally Closed). Shown below in the table are Relay 1–5 and Q1 settings starting from the right bit. Item: Keypad display B terminal (Normal close): A terminal (Normal open):

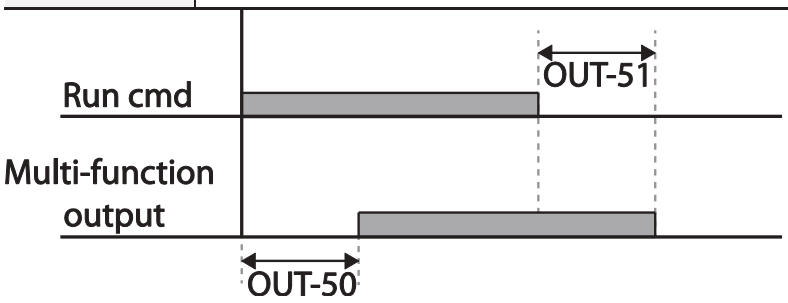

5.49 Operation State Monitor

The inverter's operation condition can be monitored using the keypad. If the monitoring option is selected in config (CNF) mode, a maximum of four items can be monitored simultaneously. Monitoring mode displays three different items on the keypad, but only one item can be displayed in the status window at a time.

Group	Code	Name	LCD Display	Parameter Setting		Setting Range	Unit
CNF	20	Display item condition display window	AnyTime Para	0	Frequency	-	-
	21	Monitor mode display 1	Monitor Line-1	0	Frequency	-	Hz

Group	Code	Name	LCD Display	Parameter Setting		Setting Range	Unit
	22	Monitor mode display 2	Monitor Line-2	2	Output Current	-	A
	23	Monitor mode display 3	Monitor Line-3	3	Output Voltage	-	V
	24	Monitor mode initialize	Mon Mode Init	0	No	-	-

Operation State Monitor Setting Details

Code	Description
CNF-20 AnyTime Para	Select items to display on the top-right side of the keypad screen. Choose the parameter settings based on the information to be displayed. Codes CNF-20–23 share the same setting options as listed below.

Setting		Function
0	Frequency	On stop, displays the set frequency. During operation, displays the actual output frequency (Hz).
1	Speed	On stop, displays the set speed (rpm). During operation, displays the actual operating speed (rpm).
2	Output Current	Displays output current.
3	Output Voltage	Displays output voltage.
4	Output Power	Displays output power.
5	WHour Counter	Displays inverter power consumption.
6	DCLink Voltage	Displays DC link voltage within the inverter.
7	DI Status	Displays input terminal status of the terminal block. Starting from the right, displays P1–P8.
8	DO Status	Displays output terminal status of the terminal block. Starting from the right: Relay1, Relay2, and Q1.
9	V1 Monitor[V]	Displays the input voltage value at terminal V1 (V).
10	V1 Monitor[%]	Displays input voltage terminal V1 value as a percentage. If -10 V, 0 V, +10 V is measured, -100%, 0%, 100% will be displayed.
13	V2 Monitor[V]	Displays input voltage terminal V2 value (V).
14	V2 Monitor[%]	Displays input voltage terminal V2 value as a percentage.
15	I2	Displays input current terminal I2 value (A).

Code	Description
CNF-21–23 Monitor Line-x	Select the items to be displayed in monitor mode. Monitor mode is the first mode displayed when the inverter is powered on. A total of three items, from monitor line-1 to monitor line- 3, can be displayed simultaneously.
CNF-24 Mon Mode Init	Selecting '1 (Yes)' initializes CNF-20–23.

	Monitor[mA]	
16	I2 Monitor[%]	Displays input current terminal I2 value as a percentage.
17	PID Output	Displays the PID controller output.
18	PID Ref Value	Displays the scale of the reference value and sets the value of PID reference.
19	PID Fdb Value	Displays the PID controller feedback volume.
20	EPID1 Mode	Displays the External PID1 mode.
21	EPID1 Output	Displays the External PID1output value.
23	EPID1 Ref Val	Displays the External PID1 reference value.

Note

Inverter power consumption

Values are calculated using voltage and current. Electric power is calculated every second and the results are accumulated. Setting CNF-62 (WH Count Reset) value to '1 (Yes)' will reset cumulated electric energy consumption. Power consumption is displayed as shown below:

- Less than 1,000 kW: Units are in kW, displayed in 999.9 kW format.
- 1–99 MW: Units are in MW, displayed in 99.99 MWh format.
- 100–999 MW: Units are in MW, displayed in 999.9 MWh format.
- More than 1,000 MW: Units are in MW, displayed in 9,999 MWh format and can be displayed up to 65,535 MW. (Values exceeding 65,535 MW will reset the value to 0, and units will return to kW. It will be displayed in 999.9 kW format).

5.50 Operation Time Monitor

This feature is used to monitor the inverter and fan operation times.

Group	Code	Name	LCD Display	Parameter Setting		Setting Range	Unit
CNF	70	Cumulated inverter power-on time	On-time	00000DAY 00:00		-	Day hh:mm
	71	Cumulated inverter operation time	Run-time	00000DAY 00:00		-	Day hh:mm
	72	Inverter operation accumulated time initialization	Time Reset	0	No	0–1	-
	74	Cooling fan operation accumulated time	Fan time	00000DAY 00:00		-	Day hh:mm
	75	Cooling fan operation accumulated time initialization	Fan Time Reset	0	No	0–1	-

Operation Time Monitor Setting Details

Code	Description
CNF-70 On-time	Displays accumulated power supply time. Information is displayed in [Day Hr: Min (00000DAY 00:00)] format.
CNF-71 Run-time	Displays accumulated time of voltage output by operation command input. Information is displayed in [Day Hr: Min (00000DAY 00:00)] format.
CNF-72 Time Reset	Setting '1 (Yes)' will delete the power supply accumulated time (On-time) and operation accumulated time (Run-time)
CNF-74 Fan time	Displays accumulated time of the inverter cooling fan operation. Information will be displayed in [Day Hr: Min (00000DAY 00:00)] format.
CNF-75 Fan Time Reset	Setting '1 (Yes)' will delete the cooling fan operation accumulated time (Fan-time)

5.51 PowerOn Resume Using the Communication

If there is a run command when recovering the power after instantaneous power interruption

using communication (BAC net, LonWorks, Modbus RTU), the inverter carries out the run command which was set before the instantaneous power interruption.

Group	Code	Name	LCD Display	Parameter Setting		Setting Range	Unit
COM	96	Automatic restart of the communication restart	PowerOn Resume	0	No	0–1	-

Caution

- If proper communication is unavailable after the instantaneous power interruption, even if the COM-96 PowerOn Resume function is set to 'Yes,' do not operate the inverter.
- The Power-on Run function operates separately (Power-on Run function and PowerOn Resume function is set to 'Yes' and power turns off and turns on, inverter maintains for the time set in Power-on run function and then, by the Power On Resume function, if the inverter is in operation by the communication command before the power interruptions, the inverter is in operation after the power recovery.)

www.nicsanat.com
021-87700210
NIC SANAT
نیک صنعت

6 Learning Protection Features

Protection features provided by the H100 series inverter are categorized into two types: protection from overheating damage to the motor and protection against the inverter malfunction.

6.1 Motor Protection

6.1.1 Electronic Thermal Motor Overheating Prevention (ETH)

ETH is a protective function that uses the output current of the inverter, without a separate temperature sensor, to predict a rise in motor temperature to protect the motor based on its heat characteristics.

Group	Code	Name	LCD Display	Parameter Setting		Setting range	Unit
PRT	40	Electronic thermal prevention fault trip selection	ETH Trip Sel	0	None	0–2	-
	41	Motor cooling fan type	Motor Cooling	0	Self-cool	-	-
	42	Electronic thermal one minute rating	ETH 1 min	120		100–150	%
	43	Electronic thermal prevention continuous rating	ETH Cont	100		50–150	%

Code	Description
PRT-40 ETH Trip Sel	ETH can be selected to provide motor thermal protection. The LCD screen displays"E-Thermal."

Setting		Function
0	None	The ETH function is not activated.
1	Free-Run	The inverter output is blocked. The motor coasts to a halt (free-run).
2	Dec	The inverter decelerates the motor to a stop.

<table>
<tr><td>PRT-41 Motor Cooling</td><td>Select the drive mode of the cooling fan, attached to the motor.
<table>
<tr><th colspan="2">Setting</th><th>Function</th></tr>
<tr><td>0</td><td>Self-cool</td><td>As the cooling fan is connected to the motor axis, the cooling effect varies based on motor speed. Most universal induction motors have this design.</td></tr>
<tr><td>1</td><td>Forced-cool</td><td>Additional power is supplied to operate the cooling fan. This provides extended operation at low speeds. Motors designed for inverters typically have this design.</td></tr>
</table>
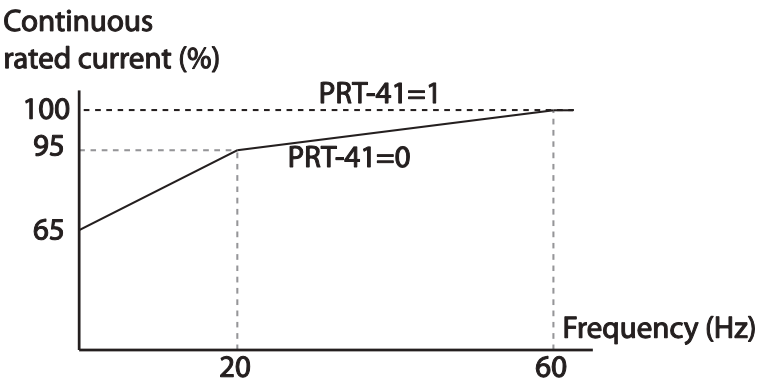
</td></tr>
<tr><td>PRT-42 ETH 1 min</td><td>The amount of input current that can be continuously supplied to the motor for 1 minute, based on the motor-rated current (BAS-13).</td></tr>
<tr><td>PRT-43 ETH Cont</td><td>Sets the amount of current with the ETH function activated. The range below details the set values that can be used during continuous operation without the protection function.
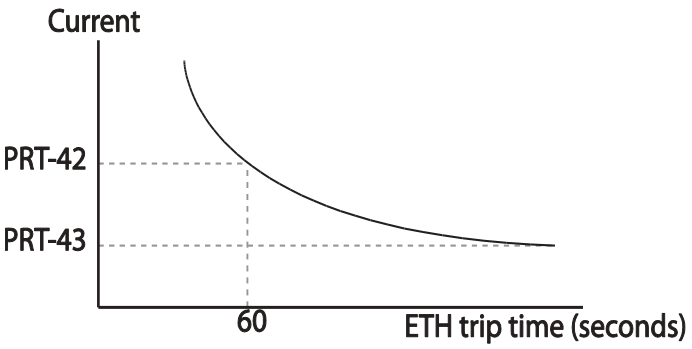
</td></tr>
</table>

Electronic Thermal (ETH) Prevention Function Setting Details

6.1.2 Motor Over Heat Sensor

To operate the motor overheat protection, connect the overheat protection temperature sensor (PT 100, PTC) installed in the motor to the inverter's analog input terminal.

Group	Code	Name	LCD Display	Parameter Setting		Setting Range	Unit
PRT	34	Selecting the operation after the detection of the motor overheat detection sensor	Thermal-T Sel	0	None	0–1	-
	35	Selecting the input of the motor overheat detection sensor	Thermal In Src	0	Thermal In	0–1	
	36	Fault level of the motor overheat detection sensor	Thermal-T Lev	50.0		0.0–100.0	%
	37	Fault area of the motor overheat detection sensor	Thermal-T Area	0	Low	0–1	
OUT	07	Analog output 2 item	AO2 Mode	14	Constant	0–18	
	08	Analog output 2 gain	AO2 Gain	100		0–100	%

Motor Overheat Protect Sensor Input Detail Settings

Code	Description
PRT-34 Thermal-T Sel	Sets the inverter operation state when motor is overheated. Setting / Function 0 None: Do not operate when motor overheating is detected. 1 Free-Run: When the motor is overheated, the inverter output is blocked and the motor will free-run by inertia. 3 Dec: When the motor is over heated, the motor decelerates and stops.
PRT-35 Thermal In Src	Selects the type of the terminal when the motor overheat protect sensor is connected to the volt (V1) or current (I2) input terminal of the terminal block in the inverter. Setting / Function 0 Thermal In: Configure the motor overheat protect sensor connection to terminal block V1. 1 V2: Configure the motor overheat protect sensor

	connection to terminal block I2.
PRT-36 Thermal-T Lev	Configure the fault level of the motor overheat detect sensor.
PRT-37 Thermal-T Area	Setting / Function 0 Low: Operates when the motor overheat sensor input is smaller than PRT-36. 1 High: Operates when the motor overheat sensor input is bigger that PRT-36.
OUT-07 AO2 Mode, OUT-08 AO2 Gain	Used when supplying the constant current to the temperature sensor and receives input through the I2 or V1 terminal block by using the analog output terminal.

Using the temperature sensor (PTC) by connecting it to the analog input terminal

When the AO2(analog current output) terminal is connected to the temperature sensor installed on a motor, the inverter supplies constant current to the temperature sensor. Then, connecting the motor signal wire to one of the inverter's analog input terminals allows the inverter to detect the changes in the PTC resistance and translates it into voltage. If the I2 terminal is used to receive the signal, set the selection switch on the I/O board to V2. If the V1 terminal is used, set the switch to T1. The sensor does not operate if SW3 is set to'V1'.

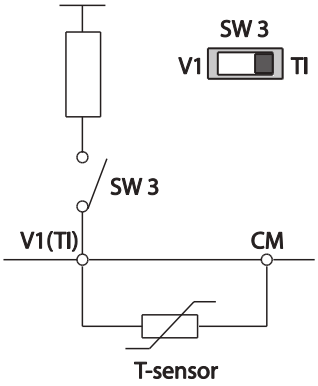

www.nicsanat.com
021-87700210
NIC SANAT
نیک صنعت

To receive PTC signal at V1 input terminal, set PRT-35 (Thermal InSrc) to '0 (Thermal In)' and set the Analog1 input selection switch (SW3) to T1.

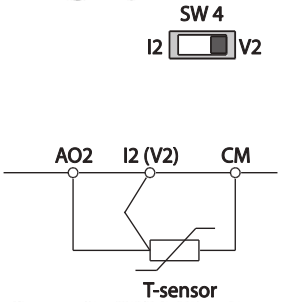

www.nicsanat.com
021-87700210
NIC SANAT
نیک صنعت

To receive PTC signal at I2 input terminal, set PRT-35 (Thermal InSrc) to '1 (V2)' and set SW 4 (Analog2 input selection switch) to V2. The sensor does not operate if SW4 is set to 'I2'. When the inverter detects a motor overheat, motor overheat trip occurs with internal delay time. The trip delay time is not reset instantly when the trip condition is released, but it only decreases as time passes.

6.1.3 Overload Early Warning and Trip

PRT	17	Overload warning selection	OL Warn Select	1	Yes	0–1	-
	18	Overload warning level	OL Warn Level	110		30–150	%
	19	Overload warning time	OL Warn Time	10.0		0–30	sec
	20	Motion at overload trip	OL Trip Select	1	Free-Run	-	-
	21	Overload trip level	OL Trip Level	120		30–150	%
	22	Overload trip time	OL Trip Time	60.0		0–60.0	sec
OUT	31–35	Multi-function relay 1–5 item	Relay 1–5	5	Over Load	-	-
	36	Multi-function	Q1 Define				

		output 1 item					

A warning or fault trip (cutoff) occurs when the motor reaches an overload state, based on the motor's rated current. The amount of current for warnings and trips can be set separately.

Overload Early Warning and Trip Setting Details

Code	Description
PRT-17 OL Warn Select	If the overload reaches the warning level, the terminal block multi-function output terminal and relay are used to output a warning signal. If '1 (Yes)' is selected, it will operate. If '0 (No)' is selected, it will not operate.
PRT-18 OL Warn Level, PRT-19 OL Warn Time	When the input current to the motor is greater than the overload warning level (OL Warn Level) and continues at that level during the overload warning time (OL Warn Time), the multi-function output (Relay 1, Q1) sends a warning signal. When Over Load is selected at OUT-31, OUT-33, the multi-function output terminal or relay outputs a signal. The signal output does not block the inverter output.
PRT-20 OL Trip Select	Select the inverter protective action in the event of an overload fault trip. Setting / Function 0 None — No protective action is taken. 1 Free-Run — In the event of an overload fault, inverter output is blocked and the motor will free-run due to inertia. 3 Dec — If a fault trip occurs, the motor decelerates and stops.
PRT-21 OL Trip Level, PRT-22 OL Trip Time	When the current supplied to the motor is greater than the preset value of the overload trip level (OL Trip Level) and continues to be supplied during the overload trip time (OL Trip Time), the inverter output is either blocked according to the preset mode from PRT-17 or slows to a stop after deceleration.

Note

Overload warnings [illegible] overload fault trip occurs. The overload warning signal may not [illegible] overload warning level (OL Warn Level) and the overload [illegible] than the overload trip level (OL Trip Level) and the overload trip time (OL Trip Time).

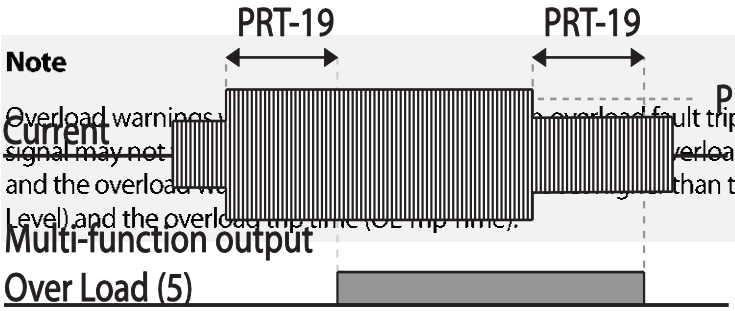

6.1.4 Stall Prevention and Flux Braking

The stall prevention function is a protective function that prevents motors from stalling due to overloads. If a motor stall occurs due to an overload, the inverter operation frequency is adjusted automatically. When a stall is caused by overload, high currents induced in the motor may cause motor overheating or damage the motor and interrupt operation of the motor-driven devices.

In this case, the motor decelerates with optimum deceleration without a braking resistor by using flux braking. If the deceleration time is too short, an over voltage fault trip may occur because of regenerative energy from the motor. The flux braking makes the motor use regenerate energy, therefore optimum deceleration is available without over voltage fault trip.

To protect the motor from overload faults, the inverter output frequency is adjusted automatically, based on the size of load.

Group	Code	Name	LCD Display	Parameter Setting		Setting range		Unit
PRT	50	Stall prevention and flux braking	Stall Prevent	0100		-		bit
	51	Stall frequency 1	Stall Freq 1	60.00		Start Freq–Stall Freq 1		Hz
	52	Stall level 1	Stall Level 1	130		30–150		%
	53	Stall frequency 2	Stall Freq 2	60.00		Stall Freq 1–Stall Freq 3		Hz
	54	Stall level 2	Stall Level 2	130		30–150		%
	55	Stall frequency 3	Stall Freq 3	60.00		Stall Freq 2–Stall Freq 4		Hz
	56	Stall level 3	Stall Level 3	130		30–150		%
	57	Stall frequency 4	Stall Freq 4	60.00		Stall Freq 3–Max Freq		Hz
	58	Stall level 4	Stall Level 4	130		30–150		%
	59	Flux Braking Gain	Flux Brake kp	0		0.75-90kW	0–150	-
						110-500kW	0–10	
OUT	31 –35	Multi-function relay 1–5 item	Relay 1–5	9	Stall	-		-

Group	Code	Name	LCD Display	Parameter Setting		Setting range	Unit
	36	Multi-function output 1 item	Q1 Define				

Code	Description
PRT-50 Stall Prevent	Stall prevention can be configured for acceleration, deceleration, or while operating a motor at constant speed.When the LCD segment is on, the corresponding bit is off.

Item	Bit Status (On)	Bit Status (Off)
Keypad display		

Setting				Function
Bit 4	Bit 3	Bit 2	Bit 1	
			✓	Stall protection during acceleration
		✓		Stall protection while operating at a constant speed
	✓			Stall protection during deceleration
✓				Flux braking during deceleration

Setting		Function
0001	Stall protection during acceleration	If inverter output current exceeds the preset stall level (PRT- 52, 54, 56, 58) during acceleration, the motor stops accelerating and starts decelerating. If current level stays above the stall level, the motor decelerates to the start frequency (DRV-19). If the current level causes deceleration below the preset level while operating the stall protection function, the motor resumes acceleration.
0010	Stall protection while operating at constant speed	Similar to stall protection function during acceleration, the output frequency automatically decelerates when the current level exceeds the preset stall level while operating at constant speed. When the load current decelerates below the preset level, it resumes acceleration.

0100	Stall protection during deceleration	The inverter decelerates and keeps the DC link voltage below a certain level to prevent an over voltage fault trip during deceleration. As a result, deceleration times can be longer than the set time depending on the load.
1000	Flux braking during deceleration	When using flux braking, deceleration time may be reduced because regenerative energy is expended at the motor.
1100	Stall protection and flux braking during deceleration	Stall protection and flux braking operate together during deceleration to achieve the shortest and most stable deceleration performance.

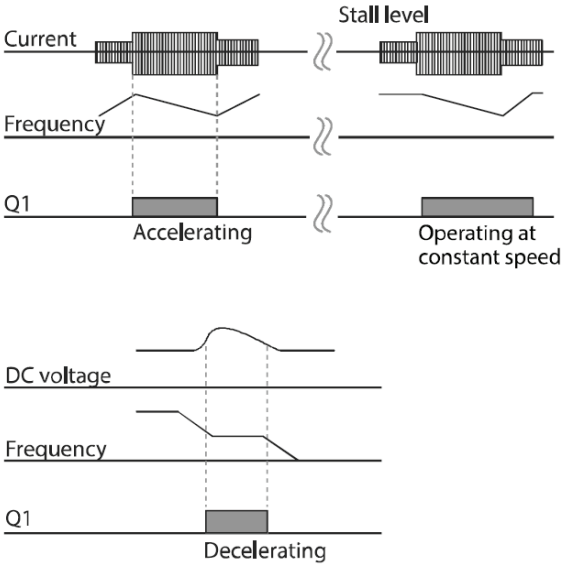

PRT-51 Stall Freq 1– PRT-58 Stall Leve l4	Additional stall protection levels can be configured for different frequencies, based on the load type. As shown in the graph below, the stall level can be set above the base frequency. The lower and upper limits are set using numbers that correspond in ascending order. For example, the range for Stall Frequency 2 (Stall Freq 2) becomes the lower limit for Stall Frequency 1 (Stall Freq 1) and the upper limit for Stall Frequency 3 (Stall Freq 3).

	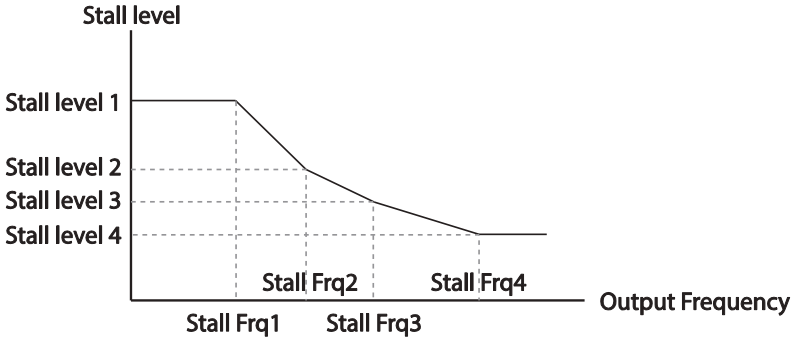
PRT-59 Flux Brake Kp	A gain used to decelerate without over voltage fault trip. It compensates for the inverter output voltage.

Stall Prevention Function and Flux Braking Setting Details

Note

Stall protection and flux braking operate together only during deceleration. Turn on the third and fourth bits of PRT-50 (Stall Prevention) to achieve the shortest and most stable deceleration performance without triggering an over voltage fault trip for loads with high inertia and short deceleration times. Do not use this function when frequent deceleration of the load is required, as the motor can overheat and be easily damaged.

Caution

- Use caution when decelerating while using stall protection since the deceleration time can take longer than the time set, depending on the load. Acceleration stops when stall protection operates during acceleration. This may make the actual acceleration time longer than the preset acceleration time.
- When the motor is operating, Stall Level 1 applies and determines the operation of stall protection.
- If the input voltage exceeds the nominal voltage, there is a possibility that the deceleration stall does not work properly.

6.2 Inverter and Sequence Protection

6.2.1 Open-phase Protection

Open-phase protection is used to prevent over current levels induced by the inverter inputs due to an open-phase within the input power supply. Open-phase output protection is also available. An open-phase at the connection between the motor and the inverter output may cause the motor to stall, due to a lack of torque.

PRT	05	Input/output open-phase protection	Phase Loss Chk	00	-	bit
	06	Open-phase input voltage band	IPO V Band	40	1–100 V	V

Input and Output Open-phase Protection Setting Details

PRT-05 Phase Loss Chk PRT-06 IPO V Band	When open-phase protection is operating, input and output configurations are displayed differently. When the LCD segment is On, the corresponding bit is set to 'Off'.

Item	Bit status (On)	Bit status (Off)
Keypad display		

Setting		Function
Bit 2	Bit 1	
	✓	Output open-phase protection
✓		Input open-phase protection

www.nicsanat.com
021-87700210
NIC SANAT
نیک صنعت

6.2.2 External Trip Signal

Set one of the multi-function input terminals to 4 (External Trip) to allow the inverter to stop operation when abnormal operating conditions arise.

IN	65–71	Px terminal setting options	Px Define (Px: P1–P7)	4	External Trip	0-55	-
	87	Multi-function input contact selection	DI NC/NO Sel			-	bit

External Trip Signal Setting Details

IN-87 DI NC/NO Sel	Selects the type of input contact. If the mark of the switch is at the bottom (0), it operates as an A contact (Normally Open). If the mark is at the top (1), it operates as a B contact (Normally Closed). The corresponding terminals for each bit are as follows:

Bit	7	6	5	4	3	2	1
Terminal	P7	P6	P5	P4	P3	P2	P1

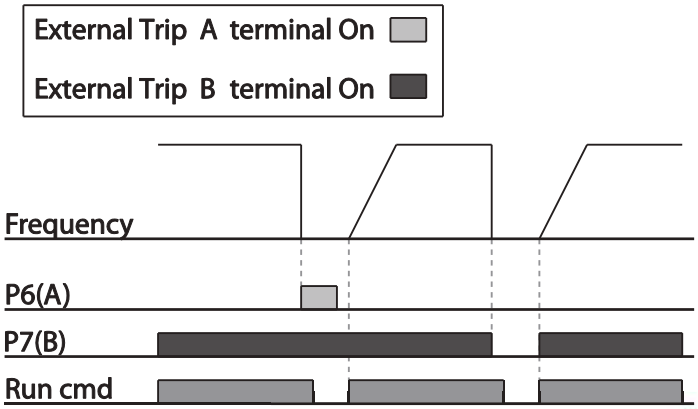

www.nicsanat.com
021-87700210
NIC SANAT
نیک صنعت

6.2.3 Inverter Overload Protection (IOLT)

When the inverter input current exceeds the rated current, a protective function is activated to prevent damage to the inverter, based on inverse proportional characteristics.

Group	Code	Name	LCD Display	Parameter Setting		Setting range	Unit
OUT	31–35	Multi-function relay 1–5	Relay 1–5	6	IOL	-	-
	36	Multi-function output 1	Q1 Define				

Note

A warning signal output can be provided in advance by the multi-function output terminal before the inverter overload protection function (IOLT) operates. When the overcurrent time reaches 60% of the allowed overcurrent (120%, 1 min; 140%, 5 sec), a warning signal output is provided (signal output at 120%, 36 sec).

6.2.4 Speed Command Loss

When setting operation speed using an analog input at the terminal block, communication options, or the keypad, speed command loss setting can be used to select the inverter operation for situations when the speed command is lost due to the disconnection of signal cables.

PRT	11	Keypad command loss operation mode	Lost KPD Mode	0	None	0	None	-
						1	Warning	
						2	Free-Run	
						3	Dec	
	12	Speed command loss operation mode	Lost Cmd Mode	1	Free-Run	-		-
	13	Time to determine speed command loss	Lost Cmd Time	1.0		0.1–120.0		sec
	14	Operation frequency at speed command loss	Lost Preset F	0.00		Start frequency–Max. frequency		Hz
	15	Analog input loss decision level	AI Lost Level	0	Half of x1			-
OUT	31 –35	Multi-function Relay 1–5	Relay 1–5	13	Lost Command	-		-
	36	Multi-function output 1	Q1 Define					

www.nicsanat.com
021-87700210
NIC SANAT
نیک صنعت

Speed Command Loss Setting Details

<table>
<tr><th>Code</th><th>Description</th></tr>
<tr><td>PRT-11 Lost KPD Mode</td><td>Set the operation command source to keypad. If there is a communication error with the keypad or connection problem between the keypad and the inverter, select the inverter's operation.
<table>
<tr><th colspan="2">Setting</th><th>Function</th></tr>
<tr><td>0</td><td>None</td><td>The speed command immediately becomes the operation frequency without any protection function.</td></tr>
<tr><td>1</td><td>Warning</td><td>Select 24: Lost keypad from OUT-31–36, one of the multi function terminal blocks, outputs a relevant warning signal when abnormal operating conditions arise.</td></tr>
<tr><td>2</td><td>Free-Run</td><td>The inverter blocks output. The motor performs in free-run condition.</td></tr>
<tr><td>3</td><td>Dec</td><td>The motor decelerates and then stops at the time set at PRT-07 (Trip Dec Time).</td></tr>
</table></td></tr>
<tr><td>PRT-12 Lost Cmd Mode</td><td>In situations when speed commands are lost, the inverter can be configured to operate in a specific mode:
<table>
<tr><th colspan="2">Setting</th><th>Function</th></tr>
<tr><td>0</td><td>None</td><td>The speed command immediately becomes the operation frequency without any protection function.</td></tr>
<tr><td>1</td><td>Free-Run</td><td>The inverter blocks output. The motor performs in free-run condition.</td></tr>
<tr><td>2</td><td>Dec</td><td>The motor decelerates and then stops at the time set at PRT-07 (Trip Dec Time).</td></tr>
<tr><td>3</td><td>Hold Input</td><td>The inverter calculates the average input value for 10 seconds before the loss of the speed command and uses it as the speed reference.</td></tr>
<tr><td>4</td><td>Hold Output</td><td>The inverter calculates the average output value for 10 seconds before the loss of the speed command and uses it as the speed reference.</td></tr>
<tr><td>5</td><td>Lost Preset</td><td>The inverter operates at the frequency set at PRT- 14 (Lost Preset F).</td></tr>
</table></td></tr>
<tr><td>PRT-15 AI Lost Level, PRT-13 Lst Cmd Time</td><td>Configure the voltage and decision time for speed command loss when using analog input.
<table>
<tr><th colspan="2">Setting</th><th>Function</th></tr>
<tr><td>0</td><td>Half of x1</td><td>Based on the values set at IN-08 and IN-12, a protective operation starts when the input signal is reduced to half of the initial value of the analog input set using the speed command (DRV-01) and it continues for the time (speed loss decision time) set at PRT-13 (Lost Cmd</td></tr>
</table></td></tr>
</table>

Code	Description		
			Time). For example, set the speed command to '2 (V1)' at DRV-07, and set IN-06 (V1 Polarity) to '0 (Unipolar)'. When the voltage input drops to less than half of the value set at IN-08 (V1 Volt x 1), the protective function is activated.
	1	Below of x1	The protective operation starts when the signal becomes smaller than the initial value of the analog input set by the speed command and it continues for the speed loss decision time set at PRT-13 (Lost Cmd Time). Codes IN-08 and IN-12 are used to set the standard values.
	If the set value of the IN-08 and IN-12 is '0,' the LostCmd function does not operate.		
PRT-14 Lost Preset F	In situations where speed commands are lost, set the operation mode (PRT-12 Lost Cmd Mode) to '5 (Lost Preset)'. This operates the protection function and sets the frequency so that the operation can continue.		

Set IN-06 (V1 Polarity) to 'Unipolar' and IN-08 to '5 (V)'. Set PRT-15 (AI Lost Level) to '1 (Below x1)' and PRT-12 (Lost Cmd Mode) to '2 (Dec)' and then set PRT-13 (Lost Cmd Time) to 5 seconds. Then the inverter operates as follows:

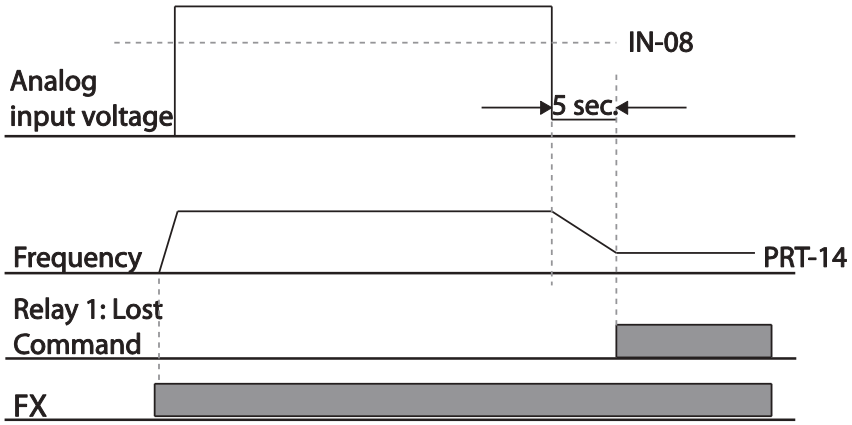

Note

If speed command is lost while using communication options or the integrated RS-485

communication, the protection function operates after the command loss decision time set at PRT-13 (Lost Cmd Time) is elapsed.

www.nicsanat.com
021-87700210
NIC SANAT
نیک صنعت

6.2.5 Dynamic Braking (DB) Resistor Configuration

For H100 series, the braking resistor circuit is integrated inside the inverter.

Group	Code	Name	LCD Display	Parameter Setting		Setting range	Unit
PRT	66	Braking resistor configuration	DB Warn %ED	0		0–30	%
OUT	31–35	Multi-function relay 1–5 item	Relay 1–5	25	DB Warn %ED	-	-
	36	Multi-function output 1 item	Q1 Define				

Dynamic Breaking Resistor Setting Details

Code	Description
PRT-66 DB Warn %ED	Set the braking resistor configuration (%ED: Enable Duty). The braking resistor configuration sets the rate at which the braking resistor operates for one operation cycle. The maximum time for continuous braking is 15 sec and the braking resistor signal is not output from the inverter after the 15 sec period elapses. An example of braking resistor set up is as follows: [Example 1] $\%ED = \frac{T_dec}{T_acc + T_steady + T_dec + T_stop} \times 100\%$ 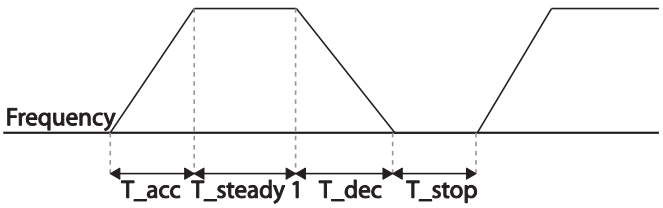 [Example 2] $\%ED = \frac{T_dec}{T_dec + T_steady1 + T_acc + T_steady2} \times 100\%$

Code	Description
	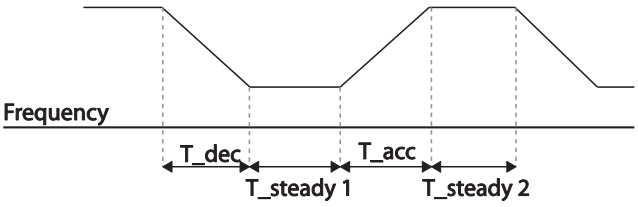 • T_acc: Acceleration time to set frequency • T_steady: Constant speed operation time at set frequency • T_dec: Deceleration time to a frequency lower than constant speed operation or the stop time from constant speed operation frequency • T_stop: Stop time until operation resumes

Caution

Do not set the braking resistor to exceed the resistor's power rating. If overloaded; it can overheat and cause a fire. When using a resistor with a heat sensor, the sensor output can be used as an external trip signal for the inverter's multi-function input.

6.2.6 Low Battery Voltage Warning

The H100 series has a battery low voltage warning feature. If the low battery voltage warning function is set to 'Yes,' a low battery voltage warning occurs when the battery voltage is lower than 2 V (normal voltage is 3 V). Replace the battery when the low battery warning is displayed.

Group	Code	Name	LCD Display	Parameter Setting		Setting Range		Unit
PRT	90	Low battery voltage detection	Low Battery	0	No	0	No	-
						1	Yes	

Low Battery Voltage Warning Detail Settings

Code	Description
PRT-90 Low Battery	The low battery voltage warning for RTC function installed in the inverter can be enabled or disabled. The low battery voltage warning occurs when the battery voltage is lower than 2 V.

Caution

- Be careful when replacing the battery. Remaining voltage in the battery may cause electric shock.
- Make sure that the battery doesn't fall inside of the inverter.

6.3 Under load Fault Trip and Warning

The following table lists the under load fault trip and warning features of the H100 series inverter.

Group	Code	Name	LCD Display	Parameter Setting		Setting range	Unit
PRT	23	Under load detection Source	UL Source	0	Output Current	0–1	-
	24	Under load detection Band	UL Band	10.0		0.0–100.0	%
	25	Under load warning selection	UL Warn Sel	1	Yes	0–1	-
	26	Under load warning time	UL Warn Time	10.0		0–600.0	sec
	27	Under load trip selection	UL Trip Sel	1	Free-Run	-	-
	28	Under load trip timer	UL Trip Time	30.0		0–600.0	sec

Under Load Trip and Warning Setting Details

Code	Description
PRT-23 UL Source	Select a source to detect the under load trip. An under load trip can be detected using output current or output power.
PRT-24 UL Band	Make a standard value for the under load fault occurrence using system load%-UL Band value set in each frequency of the load characteristics curve made by the AP2-01 Load Tune.
PRT-25 UL Warn Sel	Select the under load warning options. Set the multi-function output terminals (at OUT-31–35 and 36) to '7' (Under load). The warning signals are output when under load conditions occur.

Code	Description
PRT-26 UL Warn Time	A protect function operates when under load level condition explained above maintains for the warning time set.
PRT-27 UL Trip Sel	Sets the inverter operation mode for situations when an under load trip occurs. If set to '1 (Free-Run)', the output is blocked in an under load fault trip event. If set to '2 (Dec)', the motor decelerates and stops when an under load trip occurs.
PRT-28 UL Trip Time	A protect function operates when under load level conditions explained above maintain for the trip time set.

Caution

To operate under load trip properly, a load tuning (AP2-01 Load Tune) must be performed in advance. If you cannot perform a load tuning, manually set the load fit frequencies (AP2-02 Load Fit Lfreq–AP2-10 Load Fit Hfreq). The Under Load protection does not operate while the Energy Save function is in operation.

6.3.1 Fan Fault Detection

Group	Code	Name	LCD Display	Parameter Setting		Setting range	Unit
PRT	79	Cooling fan fault selection	Fan Trip Mode	0		Trip	
OUT	31–35	Multi-function relay 1–5	Relay 1–5	8	Fan Warning		-
OUT	36	Multi-function output 1	Q1 Define				

* With a capacity of 110 kW or more, failure mode of internal fan is selected by selection of PRT-97.

Fan Fault Detection Setting Details

Code	Description
PRT-79 Fan Trip Mode	Set the cooling fan fault mode. Setting / Function 0 Trip: The inverter output is blocked and the fan trip is displayed when a cooling fan error is detected. 1 Warning: When OUT-36 (Q1 Define) and OUT-31–35 (Relay1–5) are set to '8 (FAN Warning)', the fan error signal is output and the operation continues.

Code	Description
OUT-36 Q1 Define, OUT-31–35 Relay1–5	When the code value is set to '8 (FAN Warning)', the fan error signal is output and operation continues. However, when the inverter's inside temperature rises above a certain level, output is blocked due to activation of overheat protection.

6.3.2 Low Voltage Fault Trip

When inverter input power is lost and the internal DC link voltage drops below a certain voltage level, the inverter stops output and a low voltage trip occurs.

Group	Code	Name	LCD Display	Parameter Setting		Setting range	Unit
PRT	81	Low voltage trip decision delay time	LVT Delay	0.0		0–60.0	sec
OUT	31–35	Multi-function relay 1–5	Relay 1–5	11	Low Voltage		-
	36	Multi-function output 1	Q1 Define				

Low Voltage Fault Trip Setting Details

Code	Description
PRT-81 LVT Delay	If the code value is set to '11 (Low Voltage)', the inverter stops the output first when a low voltage trip condition occurs, then a fault trip occurs after the low voltage trip decision time elapses. The warning signal for a low voltage fault trip can be provided using the multi-function output or a relay. However, the low voltage trip delay time (LVT Delay time) does not apply to warning signals.

6.3.3 Selecting Low Voltage 2 Fault During Operation

Group	Code	Name	LCD Display	Setting		Setting range	Unit
PRT	82	Low voltage trip decision during operation	Low Voltage2	0	No	0–1	
				1	Yes		

If input power is disconnected during inverter operation and internal DC voltage decreases lower than a certain voltage, the inverter disconnects the output and displays low voltage '2 (Low Voltage 2)'.

Even if the voltage increases and goes back to the normal state, unlike a low voltage fault, it remains in a fault state until the user unlocks the fault state.

6.3.4 Output Block via the Multi-function Terminal

When the multi-function input terminal is set as the output block signal terminal and the signal is input to the terminal, then the operation stops.

Group	Code	Name	LCD Display	Parameter Setting		Setting range	Unit
IN	65–71	Px terminal setting options	Px Define (Px: P1–P7)	5	BX	0-55	-

Output Block by Multi-function Terminal Setting Details

Code	Description
IN-65–71 Px Define	When the operation of the multi-function input terminal is set to '5 (BX)' and is turned on during operation, the inverter blocks the output and 'BX' is displayed on the keypad display. While 'BX' is displayed on the keypad screen, the inverter's operation information including the operation frequency and current at the time of the BX signal can be monitored. The inverter resumes operation when the BX terminal turns off and operation command is input.

6.3.5 Trip Status Reset

Restart the inverter, using the keypad or analog input terminal, to reset the trip status.

Group	Code	Name	LCD Display	Parameter Setting		Setting range	Unit
IN	65–71	Px terminal setting options	Px Define (Px: P1–P7)	3	RST	0-55	-

Trip Status Reset Setting Details

Code	Description
IN-65–71 Px Define	Press the [Stop/Reset] key on the keypad or use the multi-function input terminal to restart the inverter. Set the multi-function input terminal to '3' (RST) and turn on the terminal to reset the trip status.

6.3.6 Operation Mode for Option Card Trip

Option card trips may occur when an option card is used with the inverter. Set the operation mode for the inverter when a communication error occurs between the option card and the inverter body, or when the option card is detached during operation.

Group	Code	Name	LCD Display	Parameter Setting		Setting range	Unit
PRT	80	Operation mode for option card trip	Opt Trip Mode	0	None	0–3	-
				1	Free-Run		
				2	Dec		

Operation Mode on Option Trip Setting Details

Code	Description		
PRT-80 Opt Trip Mode	Setting		Function
	0	None	No operation
	1	Free-Run	The inverter output is blocked and fault trip information is shown on the keypad.
	2	Dec	The motor decelerates to the value set at PRT-07 (Trip Dec Time).

6.3.7 No Motor Trip

If an operation command is run when the motor is disconnected from the inverter output terminal, a 'no motor trip' occurs and a protective operation is performed by the system.

Group	Code	Name	LCD Display	Parameter Setting		Setting range	Unit
PRT	31	Operation for no motor trip	No Motor Trip	0	None	-	-
	32	No motor trip current level	No Motor Level	5		1–100	%
	33	No motor detection time	No Motor Time	3.0		0.1–10	sec

No Motor Trip Setting Details

Code	Description
PRT-32 No Motor Level, PRT-33 No Motor Time	If the output current value [based on the rated current (BAS-13)] is lower than the value set at PRT-32 (No Motor Level), and if this continues for the time set at PRT-33 (No Motor Time), a 'no motor trip' occurs.

Caution

If BAS-07 (V/F Pattern) is set to '1 (Square)', set PRT-32 (No Motor Level) to a value lower than the factory default. Otherwise, a 'no motor trip,' due to a lack of output current, will occur when the 'no motor trip' operation is set.

www.nicsanat.com
021-87700210
NIC SANAT
نیک صنعت

6.3.8 Broken Belt

It is a function to detect a problem in case that a Belt or Coupling is broken while a pump is used.

Group	Code	Name	LCD Display	Parameter Setting	Setting range		Unit
PRT	91	Set broken belt function	BrokenBelt Sel	0 : None	0	None	-
					1	Warning	
					2	Free Run	
	92	Function frequency of broken belt	BrokenBelt Freq	15.00	15.00~MaxFreq		Hz
	93*	Motor torque current	Current Trq	-	0~100.0		%
	94**	Function torque current of broken belt	BrokenBelt Trq	10.0	0~100.0		%
	95	Function Delay time of broken belt	BrokenBelt Dly	10.0	10.0		S

* Current output torque value compared to motor rated torque(%)
** Broken belt operation torque compared to motor rated torque(%)

After inverter is operating in the frequency over PRT-92 and current torque reaches the limit set at PRT-94 and then it meets the conditions at the time above set PRT-95, Broken Belt is activated.

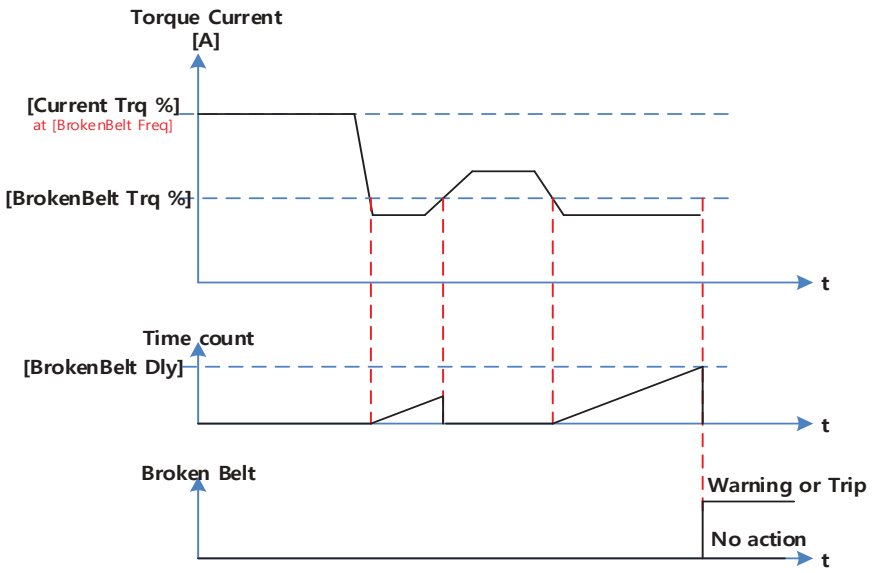

6.4 Parts Life Expectancy

Examine the life cycle of the parts (fan and main capacitor) of the inverter. By examining these parts you can use inverter more safely.

6.4.1 Main Capacitor Life Estimation

The life of the main capacitor in the inverter can be predicted by looking at the changes in the capacitance value.

PRT	83	Estimated current level of the capacitance	CAP.Diag Perc	0.0	10.0–100.0		%
	84	CAP estimating mode	CAP.Diag	0: None	0	None	%
					1	CAP. Diag 1	
					2	CAP. Diag 2	
					3	CAP. Init	
	85	CAP. deterioration level	CAP.Level1	0	0.0–100.0		%
	86	CAP. detected level	CAP.Level2	0	0.0–100.0		%
OUT	31–35	Output relay 1–5	Relay 1–5	34	CAP. Warning		-

www.nicsanat.com
021-87700210
NIC SANAT
نیک صنعت

Main Capacitor Life Estimation Detail Settings

<table>
<tr><th>Code</th><th>Description</th></tr>
<tr><td>PRT-83 CAP. Diag Perc</td><td>Configure the current level of the inverter's output when capacitance life examination is in operation. For life examination, the value must be set higher than 0%.</td></tr>
<tr><td>PRT-84 CAP. Diag</td><td>Configure the capacitance life examination mode. This mode is separated into installing the inverter mode and maintenance mode. To use the capacitance life examination function, proper setting is required.
<table>
<tr><th colspan="2">Setting</th><th>Function</th></tr>
<tr><td>0</td><td>None</td><td>Do not use capacitance life examination function.</td></tr>
<tr><td>1</td><td>CAP. Diag 1</td><td>When installing the inverter for the first time, estimate initial capacitance.</td></tr>
<tr><td>2</td><td>CAP. Diag 2</td><td>Estimate the capacitance while maintaining the inverter.</td></tr>
<tr><td>3</td><td>CAP. Init</td><td>Initialize the estimated value of the capacitance to 0.</td></tr>
</table></td></tr>
<tr><td>PRT-85 CAP. Level 1</td><td>Set the standard level for the capacitance replacement.</td></tr>
<tr><td>PRT-86 CAP. Level 2</td><td>Display estimated capacitance value according to the mode in PRT-84. If this value is lower than the value set in PRT-85, the warning message"CAP Warning" appears on the display.</td></tr>
</table>

ⓘ Caution

- Be careful when replacing the battery. Remaining voltage in the battery may cause electric shock.
- Make sure that the battery doesn't fall inside of the inverter.
- The main capacitor life examination is only for reference and cannot be used as an absolute value.
- The main capacitor life examination only operates in AUTO mode and when inverter is stopped.

6.4.2 Fan Life Estimation

The inverter records the amount of time the fan is used and sets off the alarm to replace the fan if the fan is used longer than the certain period of time.

Group	Code	Name	LCD Display	Parameter Setting	Setting Range		Unit
PRT	87	Fan accumulated time percentage	Fan Time Perc	0.0	0.0–6553.5		%
	88	Fan replacement alarm level	Fan Exchange	0.0	0.0–100.0		%
CNF	75	Initializing the accumulation time of the fan operation	Fan Time Rst	0: No	0	No	
					1	Yes	
OUT	31–35	Relay 1–5 output	Relay 1–5	35	Fan Exchange		-

When PRT-88 value is 0%, Fan Exchange alarm does not occur and user can use the function when it is set to a value other than 0%.

Fan Life Estimation Setting Details

Code	Description
PRT-87 Fan Time Perc	Displays the time the fan is used in percentage based on 50,000 hours. If this value is bigger than the value in PRT-88, the warning message"Fan Exchange" appears on the display.
PRT-88 Fan Exchange	Displays the life replacement standard of the fan in percentage.
CNF-75 Fan Time Rst	Initializes the accumulation time of the fan operation. Setting: 0 No — Do not initialize the accumulated operation time of the fan. Setting: 1 Yes — Initialize the accumulated operation time of the fan.

ⓘ Caution

- Be careful when replacing the battery. Remaining voltage in the battery may cause electric shock.
- Make sure that the battery doesn't fall inside of the inverter.

- Fan life examination is only for the reference and cannot be used as an absolute value.

www.nicsanat.com
021-87700210
NIC SANAT
نیک صنعت

6.5 Fault/Warning List

The following list shows the types of faults and warnings that can occur while using the H100 inverter. For details, refer to 6 *Learning Protection Features* on page *321.*

Category		LCD Display	Details
Major fault	Latch type	Over Current1	Over current trip
		Over Voltage	Over voltage trip
		External Trip	Trip due to an external signal
		NTC Open	Temperature sensor fault trip
		Over Current2	ARM short current fault trip
		Option Trip-x*	Option fault trip*
		Over Heat	Over heat fault trip
		Out Phase Open	Output open-phase fault trip
		In Phase Open	Input open-phase fault trip
		Ground Trip	Ground fault trip
		Fan Trip	Fan fault trip
		E-Thermal	Motor overheat fault trip
		IO Board Trip	IO Board connection fault trip
		No Motor Trip	No motor fault trip
		Low Voltage2	Low voltage fault trip during operation
		ParaWrite Trip	Write parameter fault trip
		Pipe Broken	Pipe Break fault trip
		Damper Err	Damper Err trip
		Over Load	Motor overload fault trip
		Under Load	Motor under load fault trip
		CleanRPTErr	Pump clean trip
		Level Detect	Level detect trip
		MMC Interlock	MMC Interlock trip
		Inverter OLT	Inverter overheating trip

		Thermal Trip	Motor overheating trip
		Lost Keypad	Lost keypad trip
		Broken Belt	Broken belt trip
		Pipe Broken	Pipe Broken trip
		Fuse Open	Fuse Open trip (315~500kW)
		InFAN Trip	Inner Fan trip (110~500kW)
	Level type	Low Voltage	Low voltage fault trip
		BX	Emergency stop fault trip
		Lost Command	Command loss trip
		Lost Keypad	Lost keypad trip
	Hardware damage (Fatal)	EEP Err	External memory error
		ADC Off Set	Analog input error
		IO Board Trip	IO Board connection fault trip
		Watch Dog-1	CPU Watch Dog fault trip
		Watch Dog-2	
Warning		Lost Command	Command loss fault trip warning
		Over Load	Overload warning
		Under Load	Under load warning
		Inv Over Load	Inverter overload warning
		Fan Warning	Fan operation warning
		DB Warn %ED	Braking resistor braking rate warning
		Low Battery	Low battery warning
		Fire Mode	Fire mode warning
		Pipe Broken	Pipe Break warning
		Level Detect	Level detect warning
		CAP. Warning	Capacitor lifetime warning
		Fan Exchange	Fan replacement warning
		Lost Keypad	Lost keypad warning
		Load Tune	Load curve tuning warning

	Broken Belt	Broken belt warning
	ParaWrite Fail	Smart copier error warning
	Rs Tune Err	Auto tuning warning(Rs)
	Lsig Tune Err	Auto tuning warning(Lsigma)
	InFAN Warning	Inner Fan Warning (110~500kW)

Note

- In a latch type trip, the inverter cannot unlock the fault if the user does not reset the inverter, even if the trip state is released after the trip occurs.
- In level type trip, the inverter can unlock the fault by itself if the trip state is unlocked after the trip occurs.
- In a fetal type trip, there is no way to unlock the fault other than turning the inverter off then back on after the trip occurs.

www.nicsanat.com
021-87700210
NIC SANAT
نیک صنعت

7 RS-485 Communication Features

This section in the user manual explains how to control the inverter with a PLC or a computer over a long distance using the RS-485 communication features. To use the RS-485 communication features, connect the communication cables and set the communication parameters on the inverter. Refer to the communication protocols and parameters to configure and use the RS-485 communication features.

7.1 Communication Standards

Following the RS-485 communication standards, H100 products exchange data with a PLC and computer. The RS-485 communication standards support the Multi-drop Link System and offer an interface that is strongly resistant to noise. Please refer to the following table for details about the communication standards.

Item	Standard
Communication method/ Transmission type	RS-485/Bus type, Multi-drop Link System
Inverter type name	H100
Number of connected inverters/ Transmission distance	Maximum of 16 inverters / Maximum1,200 m (recommended distance: within 700 m)
Recommended cable size	0.75 mm^2, (18 AWG), Shielded Type Twisted-Pair (STP) Wire
Installation type	Dedicated terminals (S+/S-/SG) on the control terminal block
Power supply	Supplied by the inverter - insulated power source from the inverter's internal circuit
Communication speed	1,200/2,400/4800/9,600/19,200/38,400/57,600/115,200 bps BACNET: 9600/19200/38400/76800 bps
Control procedure	Asynchronous communications system
Communication system	Half duplex system
Character system	Modbus-RTU: Binary / LS Bus: ASCII
Stop bit length	1-bit/2-bit
Frame error check	2 bytes

Item	Standard
Parity check	None/Even/Odd

7.2 Communication System Configuration

In an RS-485 communication system, the PLC or computer is the master device and the inverter is the slave device. When using a computer as the master, the RS-232 converter must be integrated with the computer, so that it can communicate with the inverter through the RS-232/RS-485 converter. Specifications and performance of converters may vary depending on the manufacturer, but the basic functions are identical. Please refer to the converter manufacturer's user manual for details about features and specifications.

Connect the wires and configure the communication parameters on the inverter by referring to the following illustration of the communication system configuration.

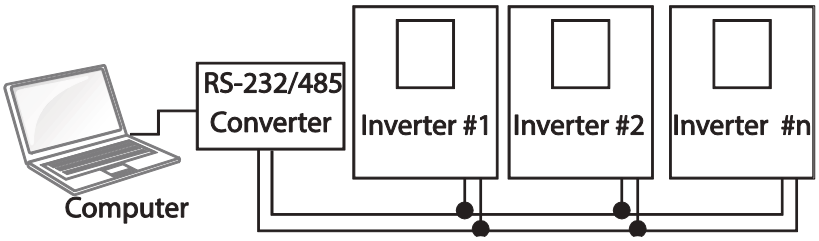

7.2.1 Communication Line Connection

Make sure that the inverter is turned off completely, and then connect the RS-485 communication line to the S+/S-/SG terminals of the terminal block. The maximum number of inverters you can connect is 16. For communication lines, use shielded twisted pair (STP) cables.

The maximum length of the communication line is 1,200 meters, but it is recommended to use no more than 700 meters of communication line to ensure stable communication. Please use a repeater to enhance the communication speed when using a communication line longer than 1,200 meters or when using a large number of devices. A repeater is effective when smooth communication is not available due to noise interference.

Caution

When wiring the communication line, make sure that the SG terminals on the PLC and inverter are connected. SG terminals prevent communication errors due to electronic noise interference.

www.nicsanat.com
021-87700210
NIC SANAT
نیک صنعت

7.2.2 Setting Communication Parameters

Before proceeding with setting communication configurations, make sure that the communication lines are connected properly. Turn on the inverter and set the communication parameters.

Group	Code	Name	LCD Display	Parameter Setting		Setting range	Unit
COM	01	Built-in communication inverter ID	Int485 St ID	1		1–MaxComID[7]	-
	02	Built-in communication protocol	Int485 Proto	0	ModBus RTU	0-6	-
	03	Built-in communication speed	Int485 BaudR	3	9600 bps	0–8	-
	04	Built-in communication frame setting	Int485 Mode	0	D8/PN/S1	0–3	-
	05	Transmission delay after reception	Resp Delay	5		0–1000	msec

Communication Parameters Setting Details

Code	Description
COM-01 Int485 St ID	Sets the inverter station ID between 1 and MaxComID.
COM-02 Int485 Proto	Select one of the four built-in protocols: Modbus-RTU, LS INV 485, BACnet or Metasys-N2.

Setting		Function
0	Modbus-RTU	Modbus-RTU compatible protocol
2	LS INV 485	Dedicated protocol for the LS inverter
4	BACnet	BAC net protocol
5	Metasys-N2	Metasys-N2 protocol
6	ModBus Master	Dedicated protocol for ModBus Master

COM-03 Int485 BaudR	Set a communication setting speed up to 115,200 bps.

[7] If AP1-40 is set to '4(Serve Drv), MaxComID is '8, and if COM-02 is set to '4(BACnet), MaxComID is '127. Otherwise MaxComID is '250.

<table>
<tr><th></th><th></th></tr>
<tr><td></td><td>The maximum setting range changes depending on the protocol.
<table>
<tr><th>Setting</th><th>Communication Speed</th></tr>
<tr><td>0</td><td>1200 bps</td></tr>
<tr><td>1</td><td>2400 bps</td></tr>
<tr><td>2</td><td>4800 bps</td></tr>
<tr><td>3</td><td>9600 bps</td></tr>
<tr><td>4</td><td>19200 bps</td></tr>
<tr><td>5</td><td>38400 bps</td></tr>
<tr><td>6</td><td>56 Kbps (57,600 bps)</td></tr>
<tr><td>7</td><td>76.8 Kbps (76,800 bps)</td></tr>
<tr><td>8</td><td>115 Kbps (115,200 bps)</td></tr>
</table>
If the COM-02 Int485 Proto setting is BACnet, the available communication speed settings are 9600 bps, 19200 bps, 76.8 kbps.
If the COM-02 Int485 Proto setting is Metasys-N2, the communication speed is fixed to 9600 bps and COM-03 Int485 BaudR is not shown.</td></tr>
<tr><td>COM-04 Int485 Mode</td><td>Set a communication configuration. Set the data length, parity check method, and the number of stop bits.
<table>
<tr><th colspan="2">Setting</th><th>Function</th></tr>
<tr><td>0</td><td>D8/PN/S1</td><td>8-bit data / no parity check / 1 stop bit</td></tr>
<tr><td>1</td><td>D8/PN/S2</td><td>8-bit data / no parity check / 2 stop bits</td></tr>
<tr><td>2</td><td>D8/PE/S1</td><td>8-bit data / even parity / 1 stop bit</td></tr>
<tr><td>3</td><td>D8/PO/S1</td><td>8-bit data / odd parity / 1 stop bit</td></tr>
</table>
If the COM-02 Int485 Proto setting is Metasys-N2, the communication frame composition is fixed to D8/PN/S1 and COM-04 Int485 Mode is not visible.</td></tr>
<tr><td>COM-05 Resp Delay</td><td>Set the response time for the slave (inverter) to react to the request from the master. Response time is used in a system where the slave device response is too fast for the master device to process. Set this code to an appropriate value for smooth master-slave communication.</td></tr>
</table>

www.nicsanat.com
021-87700210
NIC SANAT
نیک صنعت

Code	Description
	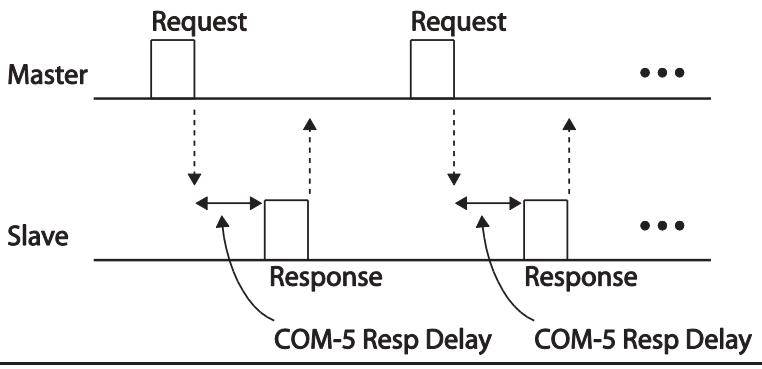

7.2.3 Setting Operation Command and Frequency

After setting the DRV-06 Cmd Source code to '3 (Int 485)' and DRV-07 Freq Ref Src code to '6 (Int 485)', you can set common area parameters for the operation command and frequency via communication. For details about the operation command, refer to *4.6.4 RS-485 Communication as a Command Input Device* on page *109* and about the frequency command, refer to *4.2.6 Setting a Frequency Reference via RS-485 Communication* on page *102*.

To select the built-in RS485 communication as the source of command, set DRV-07 to '6 (Int485)' on the keypad. Then, set common area parameters for the operation command and frequency via communication.

Group	Code	Name	LCD Display	Parameter Setting		Setting range	Unit
DRV	06	Command source	Cmd Source	3	Int 485	0–5	-
	07	Frequency setting method	Freq Ref Src	6	Int 485	0–11	-

7.2.4 Command Loss Protective Operation

Configure the command loss decision standards and protective operations run when a communication problem lasts for a specified period of time.

PRT	12	Speed command loss operation mode	Lost Cmd Mode	0	None	0–5	-
	13	Time to determine speed command loss	Lost Cmd Time	6	1.0	0.1–120.0	Sec

www.nicsanat.com
021-87700210
NIC SANAT
نیک صنعت

Command Loss Protective Operation Setting Details

PRT-12 Lost Cmd Mode, PRT-13 Lost Cmd Time	Select the operation to run when a communication error has occurred and lasted exceeding the time set at PRT-13.

Setting		Function
0	None	The speed command immediately becomes the operation frequency without any protection function.
1	Free-Run	The inverter blocks output. The motor performs in free-run condition.
2	Dec	The motor decelerates and then stops.
3	Hold Input	Operates continuously with the speed of the inputted speed command until the loss of the speed command. The inverter calculates the average input value for 10 seconds before the loss of the speed command and uses it as the speed reference.
4	Hold Output	Operates continuously with the operate frequency before the speed loss. The inverter calculates the average output value for 10 seconds before the loss of the speed command and uses it as the speed reference.
5	Lost Preset	The inverter operates at the frequency set at PRT-14 (Lost Preset F).

www.nicsanat.com
021-87700210
NIC SANAT
نیک صنعت

7.3 LS INV 485/Modbus-RTU Communication

7.3.1 Setting Virtual Multi-function Input

Multi-function input can be controlled using a communication address (0h0385). Set codes COM-70–77 to the functions to operate, and then set the BIT relevant to the function to 1 at 0h0385 to operate it. Virtual multi-function operates independently from IN-65–71 analog multi-function inputs and cannot be set redundantly. Virtual multi-function input can be monitored using COM-86 (Virt DI Status). Before you configure the virtual multi-function inputs, set the DRV code according to the command source.

Group	Code	Name	LCD Display	Parameter Setting		Setting range	Unit
COM	70–77	Communication multi-function input x	Virtual DI x (x: 1–8)	0	None	0–55	-
	86	Communication multi-function input monitoring	Virt DI Status	-	-	-	-

Example: When sending an Fx command by controlling virtual multi-function input in the common area via Int485, set COM-70 to 'FX' and set address 0h0385 to '0h0001'.

7.3.2 Saving Parameters Defined by Communication

If you turn off the inverter after setting the common area parameters or keypad parameters via communication and operate the inverter, the changes are lost and the values changed via communication revert to the previous setting values when you turn on the inverter.

Set CNF-48 to '1 (Yes)' to allow all the changes over communication to be saved, so that the inverter retains all the existing values even after the power has been turned off.

Group	Code	Name	LCD Display	Parameter Setting		Setting range	Unit
CNF	48	Save parameters	Parameter Save	0	No	0–1	-

				1	Yes		

Setting address 0h03E0 to '0' and then setting it again to '1' via communication allows the existing parameter settings to be saved. However, setting address 0h03E0 to '1' and then setting it to '0' does not carry out the same function.

www.nicsanat.com
021-87700210
NIC SANAT
نیک صنعت

7.3.3 Total Memory Map for Communication

Communication Area	Memory Map	Details
Communication common compatible area	0h0000–0h00FF	iS5, iP5A, iV5, iG5A, S100, H100 compatible area
Parameter registration type area	0h0100–0h01FF	Areas registered at COM-31–38 and COM-51–58
	0h0200–0h023F	Area registered for User Group
	0h0240–0h027F	Area registered for Macro Group
	0h0280–0h02FF	Reserved
Communication common area	0h0300–0h037F	Inverter monitoring area
	0h0380–0h03DF	Inverter control area
	0h03E0–0h03FF	Inverter memory control area
	0h0400–0h0FFF	Reserved
	0h1100	DRV Group
	0h1200	BAS Group
	0h1300	ADVGroup
	0h1400	CON Group
	0h1500	IN Group
	0h1600	OUT Group
	0h1700	COM Group
	0h1800	PID Group
	0h1900	EPI Group
	0h1A00	AP1 Group
	0h1B00	AP2 Group
	0h1C00	AP3 Group
	0h1D00	PRT Group
	0h1E00	M2 Group

7.3.4 Parameter Group for Data Transmission

By defining a parameter group for data transmission, the communication addresses registered in the communication function group (COM) can be used in communication. Parameter group for data transmission may be defined to transmit multiple parameters at once, into the communication frame.

COM	31–38	Output communication address x	Para Status-x	-	0000–FFFF	Hex
	51–58	Input communication address x	Para Control-x	-	0000–FFFF	Hex

Currently Registered CM Group Parameter

0h0100–0h0107	Status Parameter-1–Status Parameter-8	Parameter communication code value registered at COM-31–38 (Read-only)
0h0110–0h0117	Control Parameter-1–Control Parameter-8	Parameter communication code value registered at COM-51–58 (Read/Write access)

Note

When registering control parameters, register the operation speed (0h0005, 0h0380, 0h0381) and operation command (0h0006, 0h0382) parameters at the end of a parameter control frame. For example, when the parameter control frame has 5 parameter control items (Para Control - x), register the operation speed at Para Control-4 and the operation command to Para Control-5.

www.nicsanat.com
021-87700210
NIC SANAT
نیک صنعت

7.3.5 Parameter Group for User/Macro Group

By defining user/macro parameter groups, communication can be carried out using the user defined group (USR Grp) and macro group (MAC Grp) addresses that are registered at the U&M mode. Parameter groups can only be defined when using the keypad.

Currently Registered User Group Parameters

0h0200	User Grp. Code 1	Parameter value registered at U&M > USR → 1 (Read/Write) access)
0h0201	User Grp. Code 2	Parameter value registered at U&M > USR → 2 (Read/Write) access)
⋮	⋮	⋮
0h023E	User Grp. Code 63	Parameter value registered at U&M > USR → 63 (Read/Write)
0h023F	User Grp. Code 64	Parameter value registered at U&M > USR → 64 (Read/Write)

Currently Registered Macro Group Parameters

0h0240	Macro Grp. Code 1	Parameter value registered at U&M > MC → 1
0h0241	Macro Grp. Code 2	Parameter value registered at U&M > MC → 1
⋮	⋮	⋮
0h02A2	Macro Grp. Code 98	Parameter value registered at U&M > MC → 98
0h02A3	Macro Grp. Code 99	Parameter value registered at U&M > MC → 99

www.nicsanat.com
021-87700210
NIC SANAT
نیک صنعت

7.3.6 LS INV 485 Protocol

The slave device (inverter) responds to read and write requests from the master device (PLC or PC).

Request

ENQ	Station ID	CMD	Data	SUM	EOT
1 byte	2 bytes	1 byte	n bytes	2 bytes	1 byte

Normal Response

ACK	Station ID	CMD	Data	SUM	EOT
1 byte	2 bytes	1 byte	n x 4 bytes	2 bytes	1 byte

Error Response

NAK	Station ID	CMD	Error code	SUM	EOT
1 byte	2 bytes	1 byte	2 bytes	2 bytes	1 byte

- A request starts with ENQ and ends with EOT.
- A normal response starts with ACK and ends with EOT.
- An error response starts with NAK and ends with EOT.
- A station ID indicates the inverter number and is displayed as a two-byte ASCII-HEX string that uses characters 0-9 and A-F.
- CMD: Uses uppercase characters (returns an IF error if lowercase characters are encountered)—please refer to the following table.

Character	ASCII-HEX	Command
'R'	52h	Read
'W'	57h	Write
'X'	58h	Request monitor registration
'Y'	59h	Perform monitor registration

- Data: ASCII-HEX (for example, when the data value is 3000: 3000 → '0"B"B"8'h → 30h 42h 42h 38h)
- Error code: ASCII-HEX (refer to *7.3.6.4 Error Code* on page *371)*
- Transmission/reception buffer size: Transmission=39 bytes, Reception=44 bytes
- Monitor registration buffer: 8 Words
- SUM: Checks communication errors via sum.
- SUM=a total of the lower 8 bits values for station ID, command and data (Station ID+CMD+Data) in ASCII-HEX.
- For example, a command to read 1 address from address 3000: SUM='0'+'1'+'R'+'3'+'0'+'0'+'0'+'1' = 30h+31h+52h+33h+30h+30h+30h+31h = 1A7h (the control value is not included: ENQ, ACK, NAK, etc

ENQ	Station ID	CMD	Address	Number of Addresses	SUM	EOT
05h	'01'	'R'	'3000'	'1'	'A7'	04h
1 byte	2 bytes	1 byte	4 bytes	1 byte	2 bytes	1 byte

Note

Broadcasting
Broadcasting sends commands to all inverters connected to the network simultaneously. When commands are sent from station ID 255, each inverter acts on the command regardless of the station ID. However no response is issued for commands transmitted by broadcasting

7.3.6.1 Detailed Read Protocol

Read Request: Reads successive n words from address XXXX.

ENQ	Station ID	CMD	Address	Number of Addresses	SUM	EOT
05h	'01'–'FA'	'R'	'XXXX'	'1'–'8' = n	'XX'	04h
1 byte	2 bytes	1 byte	4 bytes	1 byte	2 bytes	1 byte

Total bytes=12. Characters are displayed inside single quotation marks(').

Read Normal Response

ACK	Station ID	CMD	Data	SUM	EOT
06h	'01'–'FA'	'R'	'XXXX'	'XX'	04h
1 byte	2 bytes	1 byte	n x 4 bytes	2 bytes	1 byte

Total bytes= (7 x *n* x 4): a maximum of 39

Read Error Response

NAK	Station ID	CMD	Error code	SUM	EOT
15h	'01'-'FA'	'R'	'**'	'XX'	04h
1 byte	2 bytes	1 byte	2 bytes	2 bytes	1 byte

Total bytes=9

7.3.6.2 Detailed Write Protocol

Write Request

ENQ	Station ID	CMD	Address	Number of Addresses	Data	SUM	EOT
05h	'01'–'FA'	'W'	'XXXX'	'1'–'8' = n	'XXXX…'	'XX'	04h
1 byte	2 bytes	1 byte	4 bytes	1 byte	n x 4 bytes	2 bytes	1 byte

Total bytes= (12 + *n* x 4): a maximum of 44

ACK	Station ID	CMD	Data	SUM	EOT
06h	'01'–'FA'	'W'	'XXXX…'	'XX'	04h
1 byte	2 bytes	1 byte	n x 4 bytes	2 bytes	1 byte

Write Normal Response

Total bytes= (7 + *n* x 4): a maximum of 39

Write Error Response

NAK	Station ID	CMD	Error Code	SUM	EOT
15h	'01'–'FA'	'W'	'**'	'XX'	04h
1 byte	2 bytes	1 byte	2 bytes	2 bytes	1 byte

Total bytes=9

7.3.6.3 Monitor Registration Detailed Protocol

Monitor registration request is made to designate the type of data that requires continuous monitoring and periodic updating.

Monitor Registration Request: Registration requests for *n* addresses (where *n* refers to the

ENQ	Station ID	CMD	Number of Addresses	Address	SUM	EOT
05h	'01'–'FA'	'X'	'1'–'8'=n	'XXXX…'	'XX'	04h
1 byte	2 bytes	1 byte	1 byte	n x 4 bytes	2 bytes	1 byte

number of addresses. The addresses do not have to be contiguous.)

Total bytes= (8 + n x 4): a maximum of 40

ACK	Station ID	CMD	SUM	EOT
06h	'01'–'FA'	'X'	'XX'	04h
1 byte	2 bytes	1 byte	2 bytes	1 byte

Monitor Registration Normal Response

Total bytes=7

Monitor Registration Error Response

NAK	Station ID	CMD	Error Code	SUM	EOT
15h	'01'–'FA'	'X'	'**'	'XX'	04h
1 byte	2 bytes	1 byte	2 bytes	2 bytes	1 byte

Total bytes=9

Monitor Registration Perform Request: A data read request for a registered address, received

ENQ	Station ID	CMD	SUM	EOT
05h	'01'–'FA'	'Y'	'XX'	04h
1 byte	2 bytes	1 byte	2 bytes	1 byte

from a monitor registration request

Total bytes=7

www.nicsanat.com
021-87700210
NIC SANAT
نیک صنعت

Monitor Registration Execution Normal Response

06h	'01'–'FA'	'Y'	'XXXX…'	'XX'	04h
1 byte	2 bytes	1 byte	n x 4 bytes	2 bytes	1 byte

Totalbytes= (7 + *n* x 4): a maximum of 39

Monitor Registration Execution Error Response

15h	'01'–'FA'	'Y'	'**'	'XX'	04h
1 byte	2 bytes	1 byte	2 bytes	2 bytes	1 byte

Total bytes=9

7.3.6.4 Error Code

ILLEGAL FUNCTION	IF	The requested function cannot be performed by a slave because the corresponding function does not exist.
ILLEGAL DATA ADDRESS	IA	The received parameter address is invalid at the slave.
ILLEGAL DATA VALUE	ID	The received parameter data is invalid at the slave.
WRITE MODE ERROR	WM	Tried writing (W) to a parameter that does not allow writing (read-only parameters, or when writing is prohibited during operation)

Code	Abbreviation	Description
FRAME ERROR	FE	The frame size does not match.

7.3.6.5 ASCII Code

Character	Hex	Character	Hex	Character	Hex
A	41	q	71	@	40
B	42	r	72	[	5B
C	43	s	73	\	5C
D	44	t	74	]	5D
E	45	u	75		5E
F	46	v	76		5F
G	47	w	77		60
H	48	x	78	{	7B
I	49	y	79	|	7C
J	4A	z	7A	}	7D
K	4B	0	30	–	7E
L	4C	1	31	BEL	07
M	4D	2	32	BS	08
N	4E	3	33	CAN	18
O	4F	4	34	CR	0D
P	50	5	35	DC1	11
Q	51	6	36	DC2	12
R	52	7	37	DC3	13
S	53	8	38	DC4	14
T	54	9	39	DEL	7F
U	55	space	20	DLE	10
V	56	!	21	EM	19
W	57	"	22	ACK	06
X	58	#	23	ENQ	05
Y	59	$	24	EOT	04
Z	5A	%	25	ESC	1B
a	61	&	26	ETB	17
b	62	'	27	ETX	03
c	63	(	28	FF	0C
d	64	)	29	FS	1C
e	65	*	2A	GS	1D
f	66	+	2B	HT	09
g	67	,	2C	LF	0A

h	68	-	2D	NAK	15
i	69	.	2E	NUL	00
j	6A	/	2F	RS	1E
k	6B	:	3A	S1	0F
l	6C	;	3B	SO	0E
m	6D	<	3C	SOH	01
n	6E	=	3D	STX	02
o	6F	>	3E	SUB	1A
p	70	?	3F	SYN	16
				US	1F
				VT	0B

7.3.7 Modbus-RTU Protocol

www.nicsanat.com
021-87700210
NIC SANAT
نیک صنعت

7.3.7.1 Function Code and Protocol

In the following section, station ID is the value set at COM-01 (Int485 St ID), and the starting address is the communication address (starting address size is in bytes). For more information about communication addresses, refer to *7.3.8 Compatible Common Area Parameter* on page *378.*

Reading up to 8 Consecutive Inverter Parameters Based on the Set Number - Read Holding Register (Func. Code: 0x03) and Read Input Register (Func. Code: 0x04)

Read Holding Registers (Func. Code: 0x03) and Read Input Registers (Func. Code: 0x04) are processed identically by the inverter.

Start Addr.	Starting address 1 of the inverter parameters (common area or keypad) to be read from.
No. of Reg.	Number of the inverter parameters (common area or keypad) to be read.
Byte Count	Byte number of normal response values based on the number of registers (No. of Reg).
Except. Code	Error codes

Request

Slave Station ID	Func. Code	Start Addr (Hi)	Start Addr (Lo)	No of Reg (Hi)	No of Reg (Lo)	CRC (Lo)	CRC (Hi)
1 byte	1 byte	1 byte	1 byte	1 byte	1 byte	1 byte	1 byte

Normal Response

Slave Station ID	Func. Code	Byte Count	Value (Hi)	Value (Lo)	…	Value (Hi)	Value (Lo)	CRC (Lo)	CRC (Hi)
1 byte	1 byte	1 byte	1 byte	1 byte	…	1 byte	1 byte	1 byte	1 byte

* The number of Value(Hi) and Value(Lo) is changed by the [Request No. of Reg].

Error Response

Slave Station ID	Func. Code	Except. Code	CRC(Lo)	CRC(Hi)
1 byte	1 byte	1 byte	1 byte	1 byte

* Func. Code of the error response is [Request Func. Code] + 0x80.

Writing One Inverter Parameter Value (Func. Code: 0x06)

Codes	Description
Addr.	Address 1 of the inverter parameter (common area or keypad) to be written to.
Reg. Value	The inverter parameter (common area or keypad) value to write with.
Except. Code	Error codes

Request

Slave Station ID	Func.Code	Addr (Hi)	Addr(Lo)	Value(Hi)	Value(Lo)	CRC(Lo)	CRC(Hi)
1 byte	1 byte	1 byte	1 byte	1 byte	1 byte	1 byte	1 byte

Normal Response

1 byte	1 byte	1 byte	1 byte	1 byte	1 byte	1 byte	1 byte

Error Response

1 byte	1 byte	1 byte	1 byte	1 byte

* Func. Code of the error response is [Request Func. Code] + 0x80.

Writing Multiple Registers (Func. Code: 0x10)

Start Addr.	Starting address 1 of the inverter parameters (common area or keypad) to be written to.
No. of Reg.	Number of the inverter parameters (common area or keypad) to be written.
Reg. Value	The inverter parameter (common area or keypad) values to write with.
Except. Code	Error codes

Request

1 byte	1 byte	1 byte	1 byte	1 byte	1 byte	1 byte	1 byte	1 byte	1 byte	1 byte

Normal Response

www.nicsanat.com
021-87700210
NIC SANAT
نیک صنعت

1 byte	1 byte	1 byte	1 byte	1 byte	1 byte	1 byte	1 byte

Error Response

1 byte	1 byte	1 byte	1 byte	1 byte

* Func. Code of the error response is [Request Func. Code] + 0x80.

www.nicsanat.com
021-87700210
NIC SANAT
نیک صنعت

Exception Code

01: ILLEGAL FUNCTION
02: ILLEGAL DATA ADDRESS
03: ILLEGAL DATA VALUE
06: SLAVE DEVICE BUSY
14: Write-Protection

When the Acc time (Communication address 0x1103) is changed to 5.0 sec and the Dec time (Communication address 0x1104) is changed to 10.0 sec.

Frame Transmission from Master to Slave

Hex	0x01	0x10	0x1102	0x0002	0x04	0x0032	0x0064	0x1202
Description	COM-01 Int485 St ID	Preset Multiple Register	Start Address-1 (0x1103-1)	-	-	50 (Acc time 5.0 sec)	100 (Dec time 10.0 sec)	-

Frame Transmission from Slave to Master

Hex	0x01	0x10	0x1102	0x0002	0xE534
Description	COM-01 Int485 St ID	Preset Multiple Register	Starting Address-1 (0x1103-1)	-	-

www.nicsanat.com
021-87700210
NIC SANAT
نیک صنعت

7.3.8 Compatible Common Area Parameter

The following are common area parameters partly compatible with the iS5, iP5A, iV5, iG5A, S100 series inverters. .(Addresses 0h0000-0h0011 are for compatible common area parameters. Addresses 0h0012-0h001B are for H100 series inverter parameters.)

Comm. Address	Parameter	Scale	Unit	R/W	Assigned Content by Bit	
0h0000	Inverter model	-	-	R	F: H100	
0h0001	Inverter capacity	-	-	R	0: 0.75kW, 1: 1.5kW, 2: 2.2kW 3: 3.7kW 4: 5.5kW, 5: 7.5kW 6: 11kW, 7: 15kW, 8: 18.5kW 9: 22kW, 10: 30kW, 11: 37kW 12: 45kW ,13: 55kW, 14: 75kW, 15: 90kW, 16: 110kW, 17: 132kW 18: 160kW, 19: 185kW, 20: 220kW 21: 250kW, 22: 315kW, 23: 355kW 24: 400kW, 25: 500kW	
0h0002	Inverter input voltage	-	-	R	0: 220 V product 1: 440 V product	
0h0003	Version	-	-	R	(Example) 0h0064: Version 1.00	
					(Example) 0h0065: Version 1.01	
0h0004	Reserved	-	-	R	-	
0h0005	Command frequency	0.01	Hz	R/W	-	
0h0006	Operation command (option)	-	-	R	B15	Reserved
					B14	0: Keypad Freq, 2-8: Terminal block multi-step speed 17: Up, 18: Down 19: STEADY 22: V1, 24: V2, 25: I2, 26: PULSE 27: Built-in 485 28: Communication option 30: JOG, 31: PID
					B13	
					B12	
					B11	
					B10	
					B9	
					B8	0: Keypad 1: Fx/Rx-1
					B7	

					B6	2: Fx/Rx-2 3: Built-in 485 4: Communication option 5: Time Event
				R/W	B5	Reserved
					B4	Emergency stop
					B3	W: Trip initialization (0→1), R: Trip status
					B2	Reverse operation (R)
					B1	Forward operation (F)
					B0	Stop (S)
0h0007	Acceleration time	0.1	sec	R/W	-	
0h0008	Deceleration time	0.1	sec	R/W	-	
0h0009	Output current	0.1	A	R	-	
0h000A	Output frequency	0.01	Hz	R	-	
0h000B	Output voltage	1	V	R	-	
0h000C	DC link voltage	1	V	R	-	
0h000D	Output power	0.1	kW	R	-	
0h000E	Operation status	-	-	R	B15	0: HAND, 1: AUTO
					B14	1: Frequency command source by communication (built-in, option)
					B13	1: Operation command source by communication (built-in, option)
					B12	Reverse operation command
					B11	Forward operation command
					B10	Reserved
					B9	Jog mode
					B8	Drive stopping
					B7	DC Braking
					B6	Speed reached

					B5	Decelerating
					B4	Accelerating
					B3	Fault Trip - operates according to OUT-30 setting
					B2	Operating in reverse direction
					B1	Operating in forward direction
					B0	Stopped
0h000F	Fault trip information	-	-	R	B15	Reserved
					B14	Reserved
					B13	Reserved
					B12	Reserved
					B11	Reserved
					B10	H/W-Diag
					B9	Reserved
					B8	Reserved
					B7	Reserved
					B6	Reserved
					B5	Reserved
					B4	Reserved
					B3	Level Type trip
					B2	Reserved
					B1	Reserved
					B0	Latch Type trip
0h0010	Input terminal information	-	-	R	B15 –B7	Reserved
					B6	P7
					B5	P6
					B4	P5
					B3	P4
					B2	P3

					B1	P2
					B0	P1
0h0011	Output terminal information	-	-	R	B15	Reserved
					B14	Reserved
					B13	Reserved
					B12	Reserved
					B11	Reserved
					B10	Q1
					B9	Reserved
					B8	Reserved
					B7	Reserved
					B6	Reserved
					B5	Reserved
					B4	Relay 5
					B3	Relay 4
					B2	Relay 3
					B1	Relay 2
					B0	Relay 1
0h0012	V1	0.1	%	R	V1 input voltage	
0h0013	Thermal	0.1	%	R	Input Thermal	
0h0014	V2	0.1	%	R	V2 input voltage	
0h0015	I2	0.1	%	R	I2 input Current	
0h0016	Motor rotation speed	1	Rpm	R	Displays existing motor rotation speed	
0h0017 –0h0019	Reserved	-	-	-	-	
0h001A	Select Hz/rpm	-	-	R	0: Hz unit, 1: rpm unit	
0h001B	Display the number of poles for the selected motor	-	-	R	Display the number of poles for the selected motor	

7.3.9 H100 Expansion Common Area Parameter

7.3.9.1 Monitoring Area Parameter (Read Only)

Comm. Address	Parameter	Scale	Unit	Assigned content by bit	
0h0300	Inverter model	-	-	H100: 000Fh	
0h0301	Inverter capacity	-	-	0.75 kW: 4008h, 1.5 kW: 4015h 2.2 kW: 4022h, 3.7 kW: 4037h 5.5 kW: 4055h, 7.5 kW: 4075h 11 kW: 40B0h, 15 kW: 40F0h 18.5 kW: 4125h, 22 kW: 4160h 30 kW: 41E0h, 37 kW: 4250h, 45 kW: 42D0h,55 kW: 4370h, 75 kW: 44B0h,90 kW: 45A0h, 110 kW: 46E0h, 132 kW: 4840h 160 kW: 4A00h, 185kW: 4B90h, 220 kW: 4DC0h, 250 kW: 4FA0h, 315 kW: 53B0h, 355 kW: 5630h, 400 kW: 5900h, 500 kW: 5F40h	
0h0302	Inverter input voltage/power (Single phase, 3-phase)/cooling method	-	-	200 V 3-phase forced cooling: 0231h	
				400 V 3-phase forced cooling: 0431h	
0h0303	Inverter S/W version	-	-	(ex) 0h0064: Version 1.00	
				[redacted]h0065: Version 1.01	
0h0304	Reserved	-	-	-	
0h0305	Inverter operation state	-	-	B15	0: Normal state 4: Warning occurred 8: Fault occurred
				B14	

				B13	
				B12	
				B11–	-
				B8	
				B7	1: Speed searching 2: Accelerating 3: Operating at constant rate 4: Decelerating 5: Decelerating to stop 6: H/W OCS 7: S/W OCS 8: Dwell operating
				B6	
				B5	
				B4	
				B3	0: Stopped 1: Operating in forward direction 2: Operating in reverse direction 3: DC operating
				B2	
				B1	
				B0	
0h0306	Inverter operation frequency command source	-	-	B15	Operation command source 0: Keypad 1: Communication option 3: Built-in RS 485 4: Terminal block
				B14	
				B13	
				B12	
				B11	
				B10	
				B9	
				B8	
				B7	Frequency command source 0: Keypad speed 1: Keypad torque 2-4: Up/Down operation speed 5: V1, 7: V2, 8: I2 9: Pulse
				B6	
				B5	
				B4	
				B3	

				B2 B1 B0	10: Built-in RS 485 11: Communication option 13: Jog 14: PID 25-31: Multi-step speed frequency
0h0307	Keypad S/W version	-	-	(Ex.) 0h0064: Version 1.00	
0h0308	Keypad title version	-	-	(Ex.) 0h0065: Version 1.01	
0h0309	IO Board Version	-	-	(Ex.) 0h0064: Version 1.00 (Ex.) 0h0065: Version 1.01	
0h030A–0h30F	Reserved	-	-	-	
0h0310	Output current	0.1	A	-	
0h0311	Output frequency	0.01	Hz	-	
0h0312	Output rpm	0	Rpm	-	
0h0313	Reserved	-	-	-	
0h0314	Output voltage	1	V	-	
0h0315	DC Link voltage	1	V	-	
0h0316	Output power	0.1	kW	-	
0h0317	Reserved	-	-	-	
0h0318	PID reference	0.1	%	PID reference value	
0h0319	PID feedback	0.1	%	PID feedback value	
0h031A	Display the number of poles for the 1st motor	-	-	Displays the number of poles for the first motor	
0h031B	Display the number of poles for the 2nd motor	-	-	Displays the number of poles for the 2nd motor	
0h031C	Display the number of poles for the selected motor	-	-	Displays the number of poles for the selected motor	
0h031D	Select Hz/rpm	-	-	0: Hz, 1: rpm	
0h031E –0h031F	Reserved	-	-	-	
0h0320	Digital input information			B15–B7	Reserved

				B6	P7 (I/O board)
				B5	P6 (I/O board)
				B4	P5 (I/O board)
				B3	P4 (I/O board)
				B2	P3 (I/O board)
				B1	P2 (I/O board)
				B0	P1 (I/O board)
0h0321	Digital output information	-	-	B15–B11	Reserved
				B10	Q1
				B9–B5	Reserved
				B4	Relay 5
				B3	Relay 4
				B2	Relay 3
				B1	Relay 2
				B0	Relay 1
0h0322	Virtual digital input information	-	-	B15–B8	Reserved
				B7	Virtual DI 8 (COM-77)
				B6	Virtual DI 7 (COM-76)
				B5	Virtual DI 6 (COM-75)
				B4	Virtual DI 5 (COM-74)
				B3	Virtual DI 4 (COM-73)
				B2	Virtual DI 3 (COM-72)
				B1	Virtual DI 2 (COM-71)
				B0	Virtual DI 1 (COM-70)
0h0323	Display the selected motor	-	-	0: 1st motor/1: 2nd motor	
0h0324	AI1	0.01	%	Analog input V1 or Thermal (I/O board)	

0h0325	AI2	0.01	%	Analog input V2 or I2 (I/O board)	
0h0326	Reserved	-	-	Reserved	
0h0327	Reserved	-	-	Reserved	
0h0328	AO1	0.01	%	Analog output 1 (I/O board)	
0h0329	AO2	0.01	%	Analog output 2 (I/O board)	
0h032A	Reserved	0.01	%	Reserved	
0h032B	Reserved	0.01	%	Reserved	
0h032C	Reserved	-	-	Reserved	
0h032D	Reserved	-	-	Reserved	
0h032E	Consumption energy (kWh)	0.1	kWh	Consumption energy (kWh)	
0h032F	Consumption energy (MWh)	1	MWh	Consumption energy (MWh)	
0h0330	Latch type trip information - 1	-	-	B15	PC Repeat Err
				B14	Over Heat Trip
				B13	Reserved
				B12	External Trip
				B11	Damper Err
				B10	Pipe Break
				B9	NTC Open
				B8	Reserved
				B7	Reserved
				B6	In Phase Open
				B5	Out Phase Open
				B4	Low Voltage2
				B3	E-Thermal
				B2	Inverter OLT
				B1	Under Load
				B0	Over Load
0h0331	Latch type trip	-	-	B15	Reserved

	information - 2			B14	MMC Interlock
				B13	Reserved
				B12	Reserved
				B11	Reserved
				B10	Option Trip-1
				B9	No Motor Trip
				B8	Reserved
				B7	IO Board Trip
				B6	Broken Belt
				B5	ParaWrite Trip
				B4	TB Trip
				B3	Fan Trip
				B2	Thermal Trip
				B1	Level Detect
				B0	Reserved
0h0332	Level type trip information	-	-	B15–B4	Reserved
				B3	Lost Keypad
				B2	Lost Command
				B1	Low Voltage
				B0	BX
0h0333	H/W Diagnosis Trip information	-	-	B15–B3	Reserved
				B2	Watchdog-1 error
				B1	EEP Err
				B0	ADC Offset
0h0334	Warning information-1	-	-	B15	Broken Belt
				B14	Low Battery
				B13	Load Tune

				B12	Fan Exchange
				B11	CAP. Warning
				B10	Level Detect
				B9	Reserved
				B8	Lost Keypad
				B7	Pipe Break
				B6	Fire Mode
				B5	DB Warn %ED
				B4	Fan Warning
				B3	Lost Command
				B2	Inv Over Load
				B1	Under Load
				B0	Over Load
0h0335	Latch type trip information -3	-	-	B15	Reserved
				–	Reserved
				B4	Reserved
				B3	Overcurrent2 Trip
				B2	Overvoltage Trip
				B1	Overcurrent1 Trip
				B0	Ground Fault Trip
0h0336	Warning information-2	-	-	B15	Reserved
				~	Reserved
				B3	KPD H.O.A Lock
				B2	Lsig Tune Err
				B1	Rs Tune Err
				B0	ParaWrite Fail

0h0337–0h0339	Reserved	-	-	Reserved
0h033A	Proc PID Output	0.01	%	Process PID Output (%)
0h033B	Proc PID UnitScale Ref	Proc Unit	Proc Unit	Unit Scaled Process PID reference value
0h033C	Proc PID UnitScale Fdb	Proc Unit	Proc Unit	Unit Scaled Process PID feedback value
0h0340	On Time date	0	Day	Total number of days the inverter has been powered on
0h0341	On Time Minute	0	Min	Total number of minutes excluding the total number of On Time days
0h0342	Run Time date	0	Day	Total number of days the inverter has driven the motor
0h0343	Run Time minute	0	Min	Total number of minutes excluding the total number of Run Time days
0h0344	Fan Time date	0	Day	Total number of days the heat sink fan has been running
0h0345	Fan Time minute	0	Min	Total number of minutes excluding the total number of Fan Time days
0h0346 –0h0348	Reserved	-	-	Reserved
0h0349	Reserved	-	-	-
0h034A	Option 1	-	-	0: None, 5: LonWorks
0h034B	Reserved	-	-	Reserved
0h034C	Reserved			Reserved
0h034D–0h034F	Reserved	-	-	Reserved
0h0350	E-PID 1 Output	0.01	%	External PID 1 output
0h0351	E-PID 1 Ref	0.1	%	External PID 1 Reference

0h0352	E-PID 1 Fdb	0.1	%	External PID 1 feedback	
0h0353	E-PID 1 Unit Scale Ref	Proc Unit	Proc Unit	Unit Scale External PID 1 Reference	
0h0354	E-PID 1 Unit Scale Fdb	Proc Unit	Proc Unit	Unit Scale External PID 1 feedback	
0h0355	Reserved	-	-	Reserved	
0h0356	Reserved	-	-	Reserved	
0h0357	E-PID 2 Output	0.01	%	External PID 2 output	
0h0358	E-PID 2 Ref	0.1	%	External PID 2 Reference	
0h0359	E-PID 2 Fdb	0.1	%	External PID 2 feedback	
0h035A	E-PID 2 Unit Scale Ref	Proc Unit	Proc Unit	Unit Scale External PID 2 Reference	
0h035B	E-PID 2 Unit Scale Fdb	Proc Unit	Proc Unit	Unit Scale External PID 2 feedback	
0h035C	Application Status	-	-	B15 –B2	Reserved
				B1	Fire Mode
				B0	Pump Clean
0h035D	Inv Temperature	0	℃	Heatsink Temperature	
0h035E	Power Factor	0.1	-	Output power factor	
0h035F	Inv Fan Time	-	%	INV Fan running time(%)	
0h0360	Multi motor control terminal output	-	-	B15	Reserved
				–	Reserved
				B5	Reserved
				B4	5th motor running

				B3	4th motor running
				B2	3rd motor running
				B1	2nd motor running
				B0	1st motor running

www.nicsanat.com
021-87700210
NIC SANAT
نیک صنعت

7.3.9.2 Control Area Parameter (Read/Write)

www.nicsanat.com
021-87700210
NIC SANAT
نیک صنعت

Comm. Address	Parameter	Scale	Unit	Assigned Content by Bit	
0h0380	Frequency command	0.01	Hz	Command frequency setting	
0h0381	RPM command	1	Rpm	Command rpm setting	
0h0382	Operation command	-	-	B15–B4	Reserved
				B3	0 → 1: Free-run stop
				B2	0 → 1: Trip initialization
				B1	0: Reverse command, 1: Forward command
				B0	0: Stop command, 1: Run command
				Example: Forward operation command 0003h, Reverse operation command 0001h	
0h0383	Acceleration time	0.1	sec	Acceleration time setting	
0h0384	Deceleration time	0.1	sec	Deceleration time setting	
0h0385	Virtual digital input control (0: Off, 1: On)	-	-	B15–B8	Reserved
				B7	Virtual DI 8 (COM-77)
				B6	Virtual DI 7 (COM-76)
				B5	Virtual DI 6 (COM-75)
				B4	Virtual DI 5 (COM-74)
				B3	Virtual DI 4 (COM-73)
				B2	Virtual DI 3 (COM-72)
				B1	Virtual DI 2 (COM-71)
				B0	Virtual DI 1 (COM-70)
0h0386	Digital output control (0: Off, 1: On)	-	-	B15–B11	Reserved
				B10	Q1
				B9–B5	Reserved
				B4	Relay 5
				B3	Relay 4

				B2	Relay 3
				B1	Relay 2
				B0	Relay 1
0h0387	KPD H.O.A Lock	1	-	0 : Locked, 1 : During Run, 2 : Unlocked	
0h0388	PID reference	0.1	%	Process PID reference	
0h0389	PID feedback value	0.1	%	Process PID feedback	
0h038A	Motor rated current	0.1	A	-	
0h038B	Motor rated voltage	1	V	-	
0h038C–0h038D	Reserved	-	-	Reserved	
0h038E	Proc PID Unit Reference	Proc Unit	Proc Unit	Unit Scale Process PID reference	
0h038F	Proc PID Unit Feedback	Proc Unit	Proc Unit	Unit Scale Process PID feedback	
0h0390–0h0399	Reserved	-	-	Reserved	
0h039A	Anytime Para	-	-	Set the CNF-20 value (refer to 5.49Operation State Monitor on page 316)	
0h039B	Monitor Line-1	-	-	Set the CNF-21 value (refer to 5.49Operation State Monitor on page 316)	
0h039C	Monitor Line-2	-	-	Set the CNF-22 value (refer to 5.49Operation State Monitor on page 316)	
0h039D	Monitor Line-3	-	-	Set the CNF-23 value (refer to 5.49Operation State Monitor on page 316)	
0h039E–0h039F	Reserved			Reserved	
0h03A0	PID Ref 1 Aux Value	0.1	%	PID Aux 1 reference	
0h03A1	PID Ref 2 Aux Value	0.1	%	PID Aux 2 reference	
0h03A2	PID Feedback Aux Value	0.1	%	PID Aux feedback	
0h03A3	Proc PID Aux 1 Unit Scale	Proc Unit	Proc Unit	Unit Scale PID Aux 1 reference	
0h03A4	Proc PID Aux 2 Unit	Proc	Proc	Unit Scale PID Aux 2 reference	

	Scale	Unit	Unit	
0h03A5	Proc PID Fdb Aux Unit Scale	Proc Unit	Proc Unit	Unit Scale PID Aux feedback
0h03A6–0h03AF	Reserved			Reserved
0h03B0	E-PID 1 Ref	0.1	%	External PID 1 reference
0h03B1	E-PID 1 Fdb	0.1	%	External PID 1 reference
0h03B2	E-PID 1 Unit Scale Ref	Proc Unit	Proc Unit	Unit Scale External PID 1 reference
0h03B3	E-PID 1 Unit Scale Fdb	Proc Unit	Proc Unit	Unit Scale External PID 1 feedback
0h03B4	Reserved			Reserved
0h03B5	E-PID 2 Ref	0.1	%	External PID 2 reference
0h03B6	E-PID 2 Fdb	0.1	%	External PID 2 feedback
0h03B7	E-PID 2 Unit Scale Ref	Proc Unit	Proc Unit	Unit Scale External PID 2 reference
0h03B8	E-PID 2 Unit Scale Fdb	Proc Unit	Proc Unit	Unit Scale External PID 2 feedback

Note

A frequency set via communication using the common area frequency address (0h0380, 0h0005) is not saved even when used with the parameter save function. To save a changed frequency to use after a power cycle, follow these steps:

1. Set DRV-07 to 'Keypad-1' and select a target frequency.
2. Set the frequency via communication into the parameter area frequency address (0h1101).
3. Perform the parameter save (0h03E0: '1') before turning off the power. After the power cycle, the frequency set before turning off the power is displayed.

www.nicsanat.com
021-87700210
NIC SANAT
نیک صنعت

7.3.9.3 Inverter Memory Control Area Parameter (Read and Write)

Comm. Address	Parameter	Scale	Unit	Changeable During Running	Function	
0h03E0	Save parameters	-	-	X	0: No, 1: Yes	
0h03E1	Monitor mode initialization	-	-	O	0: No, 1: Yes	
0h03E2	Parameter initialization	-	-	X	0: No, 1: All Grp 2: DRV Grp 3: BAS Grp 4: ADV Grp 5: CON Grp 6: IN Grp 7: OUT Grp 8: COM Grp 9: PID Grp	10: EPID Grp 11: AP1 Grp 12: AP2 Grp 13: AP3 Grp 14: PRT Grp 15: M2 Grp Setting is prohibited during fault trip interruptions.
0h03E3	Display changed	-	-	O	0: No, 1: Yes	
0h03E4	Macro Function Setting	-	-	X	0: Basic 1: Compressor 2: Supply Fan 3: Exhaust Fan 4: Cooling Tower 5: Circul. Pump 6: Vacuum Pump 7: Constant Torq	
0h03E5	Delete all fault history	-	-	O	0: No, 1: Yes	
0h03E6	Delete user-registrated codes	-	-	O	0: No, 1: Yes	
0h03E7	Hide parameter mode	0	Hex	O	Write: 0–9999 Read: 0: Unlock, 1: Lock	
0h03E8	Lock parameter mode	0	Hex	O	Write: 0–9999 Read: 0: Unlock, 1: Lock	
0h03E9	Easy start on (easy parameter setup mode)	-	-	O	0: No, 1: Yes	
0h03EA	Initializing power consumption	-	-	O	0: No, 1: Yes	

0h03EB	Initialize inverter operation accumulative time	-	-	O	0: No, 1: Yes
0h03EC	Initialize cooling fan accumulated operation time	-	-	O	0: No, 1: Yes

Note

- When setting parameters in the inverter memory control area, the values are reflected to the inverter operation and saved. Parameters set in other areas via communication are reflected to the inverter operation, but are not saved. All set values are cleared following an inverter power cycle and revert back to its previous values. When setting parameters via communication, ensure that a parameter save is completed prior to shutting the inverter down.
- Set parameters very carefully. After setting a parameter to '0' via communication, set it to another value. If a parameter has been set to a value other than '0' and a non-zero value is entered again, an error message is returned. The previously-set value can be identified by reading the parameter when operating the inverter via communication.
- The addresses 0h03E7 and 0h03E8 are parameters for entering the password. When the password is entered, the condition will change from Lock to Unlock, and vice versa. When the same parameter value is entered continuously, the parameter is executed just once. Therefore, if the same value is entered again, change it to another value first and then re-enter the previous value. For example, if you want to enter 244 twice, enter it in the following order: 244 → 0 → 244.
- If the communication parameter settings are initialized by setting the address 0h03E2 to [1: All Grp] or [8: COM Grp], or if any Macro function item is modified by setting the address 0h03E4, all the communication parameter settings are reverted to the factory default. If this happens, the inverter may not be able to properly receive responses from the upper-level devices due to the changes in the settings.
- If there is an undefined address in the addresses for reading multiple consecutive data defined in the common area, the undefined address returns0xFFFF while all the others return normal response. If all the consecutive addresses are undefined, one return code is received from the first undefined address only.
- If there is an undefined address in the addresses for writing into multiple consecutive data defined in the common area, or if the value that is being written is not a valid one, no error response about the wring operation is returned. If all the consecutive addresses are undefined, or if all the date is invalid, one return code is received from the first undefined address only.

Caution

It may take longer to set the parameter values in the inverter memory control area because all data is saved to the inverter. Be careful as communication may be lost during parameter setup if parameter setup is continues for an extended period of time.

7.4 BACnet Communication

7.4.1 What is BACnet Communication?

BACnet (Building Automation and Control network) is a communication network frequently used in building automation. BACnet introduces the concept of object-oriented systems, and defines standardized objects. By exchanging data, this function makes communication possible between products from different companies. It also standardizes some of the general services carried out by using these standard objects.

7.4.2 BACnet Communication Standards

Application	Items	Specification
Connection	Interface	5 Pin Pluggable connector
	Data transmission	RS-485 MS/TP, Half-duplex
	Cable	Twisted pair (1 pair and shield)
Communication	BACnet MS/TP	Stated in ANSI/ASHRAE Standards 135-2004
	Baud Rate	Supports 9600, 19200, 38400, 76800 bps
	MAC Address	1–127
	Start/Stop bit	Start 1 bit, Stop ½ bit
	Parity check	None/Even/Odd

7.4.3 BACnet Quick Communication Start

Follow the instructions below to configure the BACnet network for a quick start.

1 Set five multi-function input terminals (IN-65–71 PxDefine) to 'Interlock 1' – 'Interlock 5' respectively, in the correct motor order.

Note

- When auto change mode selection (AP1–55) is set to '0 (None)' or '1 (Aux)', and if 5 motors are operated, including the main motor, the interlock numbers 1,2,3,4,5 refer to the

monitors connected to Relay 1,2,3,4,5 (If interlock numbers 1,2,3,4,5 are connected to Relay 1,2,3,4,5 at the inverter output terminal).

- If auto change mode selection (AP1-55) is set to '2 (Main)', and the main and auxiliary motors are connected to the inverter output terminal Relay 1,2,3,4, Interlock 1,2,3,4 are the monitors connected to Relay 1,2,3,4. Set COM-04 Int485 Mode.

2 Set the Device Object Instances for COM-21 and 22 and dfine the values. The device object instances must have unique values.

3 Set COM-01 (Int485 St ID) by entering a value (for BACnet, the Int485 station ID must be set within a range of 0–127). The station ID value set at COM-01 must be within the value range defined by the Max Master Property of different Master for MS/TP token passing.

4 Test the network and make sure the BACnet communication is working properly.

Group	Code	Name	LCD display	Parameter Setting	Setting Range		Unit
COM	03	Communication Speed	Baudrate	9600 bps	0	1200[1)]	
					1	2400[1)]	
					2	4800[1)]	
					3	9600	
					4	19200	
					5	38400	
					6	57600[1)]	
					7	76800	
					8	115200[1)]	
	04	Communication Mode	Int485 Mode	D8/PN/S1	0	D8/PN/S1	
					1	D8/PN/S2	
					2	D8/PE/S1	
					3	D8/PO/S1	
	20	Maximum number of BACnet Masters	BAC Max Master	0	0–127		-
	21	BACnet device number 1	BAC Dev Inst1	237	0–4149		-
	22	BACnet device number 2	BAC Dev Inst1	0	0–999		-

Group	Code	Name	LCD display	Parameter Setting	Setting Range	Unit
	23	BACnet device password	BAC PassWord	0	0–32767	-

1) 1200 bps, 2400 bps, 4800 bps, 57600 bps, 115200 bps cannot be set in communication speed setting in case of BACnet communication.

BACnet Parameter Setting Details

Code	Description
COM-01 Int485 ST ID (MAC ID)	Refers to MACID setting parameter used in BACnet. All MACIDs of the inverter using BACnet must be set before connecting to BUS. MACID must have the unique value from the Network to be connected to MACID. If BACnet is used, the value must be within 0–127. Communication is not available if the value is not included in the range.
COM-03 Baud Rate	Sets the communication speed to use in the network.
COM-20 BAC Mas Master	Range for Max Master that is the number of devices currently connected to the communication Line is 1–127, and the default value is 127.
COM-21–22 BAC Dev Inst 1–2	BACnet Device Instance is used to identify BACnet Device, and must be set as the unique value in the BACnet network. It is used efficiently when finding BACnet Device of other Devices while installing. The following formula is used to calculate the Device Instance value: (COM-21 X 1000) + COM-22 Therefore, in the Device Instance value, COM-21 takes the thousands and higher places (fourth digit and over) and COM-22 takes the hundreds and lower places (third digit and below). COM-21 and COM-22 have the ranges of 0–4194 and 0–999 respectively, because Device Instance can have the value within 0–4,194,302.
COM-23 BAC Password	Refers to the password used for Warm/Cold Start. COM-23 Password parameter can be set within 0–32767, and the default value is 0. If the parameter setting range is set to 1–32768, the Password value set at BACnet Master and the value set at COM-23 must be the same to operate Warm/Cold Start. If COM-23 Password is set to '0', the password of BACnet Master is ignored and Warm/Cold Start is operated.

Note

MaxMaster and MACID affect performing Network communication. It is recommended to set as small

value as possible, and to set the continuous value for MACID. If the values are set as explained above, efficient Token Passing Configuration is possible because each Master tries to give Token to Device set as its own (MACD+1).

7.4.4 Protocol Implementation

The following table sums the information required to implement a BACnet system. Refer to each section of the table to implement a BACnet system properly.

BACnet Services	I-Am (Answer to Who-Is, when broadcast or reset after power-up)	
	I-Have (Answer to Who-Has)	
	Read Property	
	Write Property	
	Device Communication Control	Ignores Password in Device Communication Control
	Reinitialize Device	Warm/Cold Starts (Supports Password) Start Backup, End Backup, Start Restore, End Restore, or Abort Restore services are NOT available.
Data Link Layer	BACnet communication card supports an MS/TP Master Data Link Layer	Supported Standards: MS/TP Available speed: 9600, 19200, 38400, and 76800 bps
MAC ID/Device Object Instance configuration	Set at COM-01 Int485 ST ID (MAC ID). The Device Object Instances are set at COM-21 and COM-22.	
MAX Master Property	Set at COM-20 (MAX Master Value).	

7.4.5 Object Map

www.nicsanat.com
021-87700210
NIC SANAT
نیک صنعت

Property	Object Type						
	Device	BI	BV	AI	AO	MSI	MVI
Object Identifier	O	O	O	O	O	O	O
Object Name	O	O	O	O	O	O	O
Object Type	O	O	O	O	O	O	O
System Status	O						
Vendor Name	O						
Vendor Identifier	O						
Model Name	O						
Firmware Revision	O						
Appl Software Revision	O						
Location	O						
Protocol Version	O						
Protocol Revision	O						
Services Supported	O						
Object Types Supported	O						
Object List	O						
Max APDU Length	O						
APDU Timeout	O						
Number APDU Retries	O						
Max Master	O						
Max Info Frames	O						
Device Address Binding	O						
Database Revision	O						
Preset Value		O	O	O	O	O	O
Description	O	O	O	O	O	O	O
Status Flags		O	O	O	O	O	O
Event State		O	O	O	O	O	O
Reliability		O	O	O	O	O	O

Property	Object Type						
	Device	BI	BV	AI	AO	MSI	MVI
Out-of-Service		O	O	O	O	O	O
Number of states						O	O
State text						O	O
Units				O	O		
Polarity		O					
Active Text		O	O				
Inactive Text		O	O				

* **BI**–Binary Input / **BV**–Binary Value / **AI**–Analog Input / **AV**–Analog Value / **MSI**–Multistate Input / **MSV**–Multistate Value

You can read/write in Location and Description only if it is the device object. You can write a maximum of 29 words.

7.4.5.1 Analog Value Object Instance

Instance ID	Object Name	Description	Setting Range	Units	R/W
AV1	CommTimeoutSet	Command timeout setting	0.1–120.0	Secs	R/W
AV2	AccelTimeSet	Accelerate time setting	0.0–600.0	Secs	R/W
AV3	DecelTimeSet	Decelerate time setting	0.0–600.0	Secs	R/W
AV4	CommandFreqSet	Command frequency setting**	0.00–DRV-20	Hz	R/W
AV5	PIDReferenceSet	PID reference setting	0–100.0	%	R/W
AV6	PIDFeedbackSet	PID feedback setting	0–100.0	%	R/W

ⓘ Caution

- When PowerOn Resume (COM-96) is set to 'yes', value is saved even if the power of the inverter is disconnected. When PowerOn Resume (COM-96) is set to 'no', value is not saved if the power of the inverter is disconnected.
- A value higher than the maximum frequency (DRV-20) cannot be used. The maximum frequency can be set by using the keypad. This value can be used when Freq Ref Src (DRV-07) is set to 'Int 485'.
- AV2, AV3 and AV4 are used to provide acceleration/deceleration rate and frequency reference commands. These can be written in AUTO mode only.

7.4.5.2 Multi-state Value Object Instance

Instance ID	Object Name	Description	Setting Range	Units	R/W
MSV1	LostCommand	Command lost operation setting	0: None 1: FreeRun 2: Dec 3: HoldInput 4: HoldOutput 5: LostPreset	MSG	R/W

7.4.5.3 Binary Value Object Instance

Instance ID	Object Name	Description	Active /Inactive Text	R/W
BV1	StopCmd	Stop command	False/True	R/W
BV2	RunForwardCmd	Run forward command	False/True	R/W
BV3	RunReverseCmd	Run reverse command	False/True	R/W
BV4	ResetFaultCmd	Fault reset command	False/True	R/W
BV5	FreeRunStopCmd	Free run stop command	False/True	R/W
BV6	Relay1Cmd	Relay 1 On/Off command	False/True	R/W
BV7	Relay2Cmd	Relay 2 On/Off command	False/True	R/W
BV8	Relay3Cmd	Relay 3 On/Off command	False/True	R/W

Instance ID	Object Name	Description	Active /Inactive Text	R/W
BV9	Relay4Cmd	Relay 4 On/Off command	False/True	R/W
BV10	Relay5Cmd	Relay 5 On/Off command	False/True	R/W
BV11	Q1Cmd	Q 1 On/Off command	False/True	R/W

7.4.5.4 Analog Input Object Instance

Instance ID	Object Name	Description	Units	R/W
AI1	InvCap (kW)	Inverter capacity	kW	R
AI2	InvCap (HP)	Inverter capacity	HP	R
AI3	InvVoltageClass	Inverter voltage type	Volts	R
AI4	OutputCurrent	Output current	Amps	R
AI5	OutputFreq	Output frequency	Hz	R
AI6	OutputVolgate	Output voltage	Volts	R
AI7	DCLinkVoltage	DC Link voltage	Volts	R
AI8	OutputPower	Output power	kW	R
AI9	AI1	Value of Analog 1	%	R
AI10	AI2	Values of Analog 2	%	R
AI11	OutputRPM	Output speed	RPM	R
AI12	Pole	Pole number of the motor	-	R
AI13	InvStatus	Information of the inverter state (Refer to address 0h0305 in the common area)(Note1)	-	R
AI14	LatchTripInfo1	Latch type trip information1 (Refer to address 0h0330 in the common area)(Note1)	-	R
AI15	LatchTripInfo2	Latch type trip information2	-	R

Instance ID	Object Name	Description	Units	R/W
		(Refer to address 0h0331 in the common area)(Note1)		
AI16	LatchTripInfo3	Latch type trip information3 (Refer to address 0h0335 in the common area)(Note1)	-	R
AI17	LevelTripInfo	Level type trip information (Refer to address 0h0332 in the common area)(Note1)	-	R
AI18	HWDIagInfo	H/W Diagnosis trip information (Refer to address 0h0333 in the common area)*	-	R
AI19	WarningInfo	Warning information (Refer to address 0h0334 in the common area)*	-	R
AI20	KiloWattHour	Output power by kW/h	kW/h	R
AI21	MegaWattHour	Output power by MW/h	MW/h	R
AI22	PowerFactor	Power factor	-	R
AI23	RunTimeDay	Run time by day	Day	R
AI24	RunTimeMin	Run time by minute	Day	R
AI25	PidOutValue	PID Output Value	%	R
AI26	PidReferenceValue	PID Reference Value	%	R
AI27	PidFeedbackValue	PID Feedback Value	%	R

*Refer to the relevant addresses in 7.3.8 communication compatible common area parameters.

Instance ID	Object Name	Description	R/W
BI1	Stopped	Stop state	R
BI2	RunningForward	Running forward	R
BI3	RunningReverse	Running reverse	R

BI4	Tripped	Trip occurred	R
BI5	Accelerating	Accelerating	R
BI6	Decelerating	Decelerating	R
BI7	SteadySpeed	Operating at steady speed	R
BI8	RunningDC	Operating at a 0 step speed	R
BI9	Stopping	Stopping	R
BI10	FwdRunCommandState	Forward run command state	R
BI11	RevRunCommandState	Reverse run command state	R
BI12	P1	P1 state	R
BI13	P2	P2 state	R
BI14	P3	P3 state	R
BI15	P4	P4 state	R
BI16	P5	P5 state	R
BI17	P6	P6 state	R
BI18	P7	P7 state	R
BI19	Relay1	Relay1 state*	R
BI20	Relay2	Relay2 state*	R
BI21	Relay3	Relay3 state*	R
BI22	Relay4	Relay4 state*	R
BI23	Relay5	Relay5 state*	R
BI24	Q1	Q1 state	R
BI25	SpeedSearch	Speed search operating	R
BI26	HWOCS	H/W OCS occurred	R
BI27	SWOCS	S/W OCS occurred	R
BI28	RunningDwell	Dwell operating state	R
BI29	SteadyState	Steady state	R

BI30	Warning	Warning state	R

7.4.5.5 Binary Input Object Instance

Caution

OUT-31–35 (Relay1–5) must be set to '0 (none)' to control outputs via communication.

7.4.5.6 MultiState Input Object Instance

Instance ID	Object Name	Description	Units	R/W
MSI1	UnitsDisplay	Displays Unit setting	1 Hz 2 RPM	R

7.4.5.7 Error Message

Display	Description
serviceserror+7	Inconsistent parameters
propertyerror+9	Invalid data type
serviceserror+10	Invalid access method
serviceserror+11	Invalid file start
serviceserror+29	Service request denied
objecterror+31	Unknown object
propertyerror+0	Property other
propertyerror+27	Read access denied
propertyerror+32	Unknown property
propertyerror+37	Value out of range
propertyerror+40	Write access denied
propertyerror+42	Invalid array index

clienterror+31	Unknown device
resourceserror+0	Resources other
clienterror+30	Time out
abortreason+4	Segmentation not supported
rejectreason+4	Invalid tag
clienterror+0xFF	No invoke id
securityerror+26	Password failure

www.nicsanat.com
021-87700210
NIC SANAT
نیک صنعت

7.5 Metasys-N2 Communication

7.5.1 Metasys-N2 Quick Communication Start

Follow the instructions below to configure the Metasys-N2 network for a quick start.

1 Set COM-02 (Int485 Proto) to '5 (Metasys-N2)'.

2 Set the network communication speed to '9600 bps.'

3 Configure the communication modes and make sure that they are fixed to Data Bit 8 / No Parity Bit/ Start Bit 1 / Stop Bit 1.

4 Test the network and make sure Metasys-N2 communication is working properly.

7.5.2 Metasys-N2 Communication Standard

Item	Standards
Communication speed	9600 bps
Control procedure	Asynchronous communications system
Communication system	Half duplex system
Cable	Twisted pair (1 pair and shield)
Character system	LS485: ASCII (8bit) Modbus-RTU: Binary (7/8 bit) Metasys-N2: ASCII (8bit)
Start/Stop bit	Start 1bit, Stop 1bit
Error check	RS485: Checksum (2byte)
	Modbus-RTU: CRC16 (2byte) Metastys-N2: CRC16 (2byte)
Parity check	None

7.5.3 Metasys-N2 Protocol I/O Point Map

www.nicsanat.com
021-87700210
NIC SANAT
نیک صنعت

7.5.3.1 Analog Output

The output point map controlling the inverter from the Metasys-N2 master.

AO1	Command Frequency	0.0–Max Freq		Hz	Command frequency setting**
AO2	Accel Time	0.0–600.0		Sec	ACC time setting*
AO3	Decel Time	0.0–600.0		Sec	DEC time setting*
AO4	Drive mode	0	KeyPad	-	Drive mode setting
		1	Fx/Rx-1		
		2	Fx/Rx-2		
		3	Int. 485		
		4	FieldBus		
		5	Time Event		
AO5	Freq mode	0	–KeyPad-1	-	Frequency mode setting
		1	–KeyPad-2		
		2	V1		
		3	–Reversed		
		4	V2		
		5	I2		
		6	Int485		
		7	FieldBus		
		8	Reversed		
		9	Pulse		

Caution

- When PowerOn Resume (COM-96) is set to 'yes', value is saved even if the power of the inverter is disconnected. If PowerOn Resume (COM-96) is set to 'no', value is not saved when the power of the inverter is disconnected.
- Cannot set the value higher than the maximum frequency (DRV-20). The maximum frequency can be set by using the keypad. This value can be used when Freq Ref Src (DRV-07) is set to 'Int 485'.

7.5.3.2 Binary Output

The output point map controlling the inverter from the Metasys-N2 master.

No.	Name	Range	Description
BO1	Stop Command	1: Stop	Stop command
BO2	Run Forward Command	1: Forward Run	Forward run command
BO3	Run Reverse Command	1: Reverse Run	Reverse run command
BO4	Reset Fault	1: Reset	Fault reset command
BO5	Free-Run Stop	1: Bx	Free-run stop command

7.5.3.3 Analog Input

Metasys-N2 master monitors inverter state.

No.	Name	Unit	Description
AI1	Output Current	Amps	Output current
AI2	Output Frequency	Hz	Output frequency
AI3	Output Speed	RPM	Output speed
AI4	Trip Code	-	Trip code information (Refer to Common Area parameter address 0h000F)*

No.	Name	Unit	Description
AI5	Latch Trip Info1	-	'Latch' type fault trip information 1 (Refer to Common Area parameter address 0h0330)*
AI6	Latch Trip Info2	-	'Latch' type fault trip information 2 (Refer to Common Area parameter address 0h0331)*
AI7	Latch Trip Info3	-	'Latch' type fault trip information 3 (Refer to Common Area parameter address 0h0335)*
AI8	Level Trip Info	-	'Level' type fault trip information (Refer to Common Area parameter address 0h0332)(1)
AI9	H/W Diagnosis Trip Info	-	H/W Diagnosis fault trip information (Refer to Common Area parameter address 0h0333)(1)
AI10	Warning Info	-	Warning information (Refer to Common Area parameter address 0h0334)(1)

* Refer to *7.3.8Compatible Common Area Parameter* on page *378.*

7.5.3.4 Binary Input

Metasys-N2 master unit monitors the inverter input and output status in binary codes. The following table lists the binary codes used and their meanings.

No.	Name	Description
BI1	Stopped	1 – Stopped
BI2	Running Forward	1 – Forward operation is running.
BI3	Running Reverse	1 – Reverse operation is running.
BI4	Tripped	1 – Fault trip occurred.
BI5	Accelerating	1 –Accelerating
BI6	Decelerating	1 –Decelerating
BI7	Reached Full Speed	1 –Running at a steady speed (frequency reference)
BI8	DC Braking	1 – Running on DC power source
BI9	Stopping	1–Stopping is in progress.
BI10	P1 Input	1–True / 0 - False
BI11	P2 Input	1–True / 0–False

No.	Name	Description
BI12	P3 Input	1–True / 0–False
BI13	P4 Input	1–True / 0–False
BI14	P5 Input	1–True / 0–False
BI15	P6 Input	1–True / 0–False
BI16	P7 Input	1–True / 0–False
BI17	Relay1 State	1–On / 0 - Off
BI18	Relay2 State	1–On / 0 - Off
BI19	Relay3 State	1–On / 0 - Off
BI20	Relay4 State	1–On / 0 - Off
BI21	Relay5 State	1–On / 0 - Off
BI22	Q1 (OC1) State	1–On / 0 - Off

7.5.3.5 Error Code

Defined Codes	Description
00	The device has been reset. Currently waiting for the 'Identity Yourself' command.
01	Undefined command
02	Checksum error has occurred.
03	Data size exceeded the input buffer (message is bigger than the device buffer size).
05	Data field error (input message size does not fit the command type)
10	Invalid data (message value is out of the range)
11	Invalid command for data type (command does not fit the message frame)
12	Command is not accepted (device has ignored a command due to a fault. The master device sends a 'Status Update Request').

8 Table of Functions

This chapter lists all the function settings for the H100 series inverter. Use the references listed in this document to set the parameters. If an entered set value is out of range, the messages that will be displayed on the keypad are also provided in this chapter. In these situations, the [ENT] key will not operate to program the inverter.

www.nicsanat.com
021-87700210
NIC SANAT
نیک صنعت

8.1 Drive Group (DRV)

Data in the following table will be displayed only when the related code has been selected.

***O: Write-enabled during operation, Δ: Write-enabled when operation stops, X: Write-disabled**

00	-	Jump Code	Jump Code	1–99		9		O	p.70
01	0h1101	Target frequency	Cmd Frequency	0.00, Low Freq–High Freq		0.00		O	p.88
02	0h1102	Keypad run direction	Keypad Run Dir	0	Reverse	1		O	p.86
				1	Forward				
03	0h1103	Acceleration time	Acc Time	0.0–600.0 (sec)		20.0	0.75~90kW	O	p.114
						60.0	110~250kW		
						100.0	315~500kW		
04	0h1104	Deceleration time	Dec Time	0.0–600.0 (sec)		30.0	0.75~90kW	O	p.114
						90.0	110~250kW		
						150.0	315~500kW		

Code	Comm. Address	Name	LCD Display	Setting Range		Initial value	Property*	Ref.
05	0h1105	HAND-OFF-AUTO Key Lock	KPD H.O.A Lock	0	Locked	1	Δ	p.75
				1	During Run			
				2	Unlocked			
06	0h1106	Command source	Cmd Source	0	Keypad	1: Fx/Rx-1	Δ	p.106
				1	Fx/Rx-1			
				2	Fx/Rx-2			
				3	Int 485			
				4	Field Bus			
				5	Time Event			
07	0h1107	Frequency reference source	Freq Ref Src	0	Keypad-1	0: Keypad-1	Δ	p.88
				1	Keypad-2			
				2	V1			
				4	V2			
				5	I2			
				6	Int 485			
				7	FieldBus			
				9	Pulse			
				10[8]	V3			
				11	I3			
09	0h1109	Control mode	Control Mode	0	V/F	0: V/F	Δ	p.125, p.162,
				1	Slip Compen			

[8] '10(V3)~11(I3)' of DRV-07 are available when Extension IO option is equipped. Refer to Extension IO option manual for more detailed information.

Code	Comm. Address	Name	LCD Display	Setting Range		Initial value	Property*	Ref.
11	0h110B	Jog frequency	Jog Frequency	0.00, Low Freq–High Freq		10.00	O	p.153
12	0h110C	Jog run acceleration time	Jog Acc Time	0.0–600.0 (sec)		20.0	O	p.153
13	0h110D	Jog run deceleration time	Jog Dec Time	0.0–600.0 (sec)		30.0	O	p.153
14	0h110E	Motor capacity	Motor Capacity	0	0.2 Kw (0.3HP)	Dependent on motor setting	Δ	p.219
				1	0.4 kW (0.5HP)			
				2	0.75 kW (1.0HP)			
				3	1.1 kW (1.5HP)			
				4	1.5 kW (2.0HP)			
				5	2.2 kW (3.0HP)			
				6	3.0 kW (4.0HP)			
				7	3.7 kW (5.0HP)			
				8	4.0 kW (5.5HP)			
				9	5.5 kW (7.5HP)			
				10	7.5 kW (10.0HP)			

Code	Comm. Address	Name	LCD Display	Setting Range		Initial value	Property*	Ref.
				11	11.0 kW (15.0HP)			
				12	15.0 kW (20.0HP)			
				13	18.5 kW (25.0HP)			
				14	22.0 kW (30.0HP)			
				15	30.0 kW (40.0HP)			
				16	37.0 kW (50.0HP)			
				17	45.0 kW (60.0HP)			
				18	55.0 kW (75.0HP)			
				19	75.0kW (100.0HP)			
				20	90.0kW (125.0HP)			
				21	110.0kW (150.0HP)			
				22	132.0kW (220.0HP)			
				23	160.0kW (250.0HP)			
				24	185.0kW (300.0HP)			
				25	220.0kW			

Code	Comm. Address	Name	LCD Display	Setting Range		Initial value		Property*	Ref.
					(350.0HP)				
				26	250.0kW (400.0HP)				
				27	315.0kW (500.0HP)				
				28	355.0kW (550.0HP)				
				29	400.0kW (650.0HP)				
				30	500.0kW (800.0HP)				
15	0h110F	Torque boost options	Torque Boost	0	Manual	0: Manual		Δ	p.129
				1	Auto 1				
				2	Auto 2				
16[9]	0h1110	Forward Torque boost	Fwd Boost	0.0–15.0 (%)		2.0	0.75~ 90kW	Δ	p.129
						1.0	110~ 500kW		
17	0h1111	Reverse Torque boost	Rev Boost	0.0–15.0 (%)		2.0	0.75~ 90kW	Δ	p.129
						1.0	110~ 500kW		
18	0h1112	Base frequency	Base Freq	30.00–400.00 (Hz)		60.00		Δ	p.125
19	0h1113	Start frequency	Start Freq	0.01–10.00 (Hz)		0.50		Δ	p.125
20	0h1114	Maximum frequency	Max Freq	40.00-400.00 (Hz)		60.00		Δ	p.137

[9] DRV-16–17 are displayed when DRV-15 is set to '0 (Manual)'.

Code	Comm. Address	Name	LCD Display	Setting Range		Initial value	Property*	Ref.
21	0h1115	Select speed unit	Hz/Rpm Sel	0	Hz Display	0: Hz Display	O	p.104
				1	RPM Display			
25	0h1119	Hand mode operation frequency	HAND Cmd Freq	0.00, Low Freq-High Freq		0.00	O	p.83
26	0h111A	Hand mode operation Frequency reference source	HAND Ref Mode	0	HAND Parameter	0: HAND Parameter	Δ	p.83
				1	Follow AUTO			
30	0h111E	kW/HP unit selection	kW/HP Unit Sel	0	kW	1:HP	O	-
				1	HP			
91	0h115B	Smart Copy	SmartCopy	0	None	0:None	Δ	
				1	SmartDownload			
				3	SmartUpload			
98	0h1162	Display I/O,S/W Version	I/O S/W Ver	-	-	-	X	-

8.2 Basic Function Group (BAS)

Data in the following table will be displayed only when the related code has been selected.

***O: Write-enabled during operation, Δ: Write-enabled when operation stops, X: Write-disabled**

Code	Comm. Address	Name	LCD Display	Setting Range		Initial value	Property*	Ref.
00	-	Jump Code	Jump Code	1-99		20	O	p.70
01	0h1201	Auxiliary reference source	Aux Ref Src	0	None	0: None	Δ	p.147
				1	V1			
				3	V2			
				4	I2			
				6	Pulse			
				7	Int 485			
				8	FieldBus			
				10	EPID1 Output			
				11	EPID1 Fdb Val			
				12[10]	V3			
				13	I3			
02[11]	0h1202	Auxiliary command calculation type	Aux Calc Type	0	M+(G*A)	0: M+(G*A)	Δ	p.147
				1	Mx (G*A)			
				2	M/(G*A)			
				3	M+[M*(G*A)]			
				4	M+G*2 (A-50%)			
				5	M*[G*2 (A-50%)			
				6	M/[G*2 (A-			

[10] '12(V3)~13(I3)' of BAS-01 are available when Extension IO option is equipped. Refer to Extension IO option manual for more detailed information.

[11] BAS-02–03 are displayed when BAS-01 is not '0 (None).

Code	Comm. Address	Name	LCD Display	Setting Range		Initial value	Property*	Ref.
					50%)]			
				7	M+M*G*2 (A-50%)			
03	0h1203	Auxiliary command gain	Aux Ref Gain	-200.0-200.0 (%)		100.0	O	p.147
04	0h1204	Second command source	Cmd 2nd Src	0	Keypad	1: Fx/Rx-1	Δ	p.141
				1	Fx/Rx-1			
				2	Fx/Rx-2			
				3	Int 485			
				4	FieldBus			
				5	Time Event			
05	0h1205	Second frequency source	Freq 2nd Src	0	Keypad-1	0: Keypad-1	O	p.141
				1	Keypad-2			
				2	V1			
				4	V2			
				5	I2			
				6	Int 485			
				7	FieldBus			
				9	Pulse			
				10[12]	V3			
				11	I3			
07	0h1207	V/F pattern options	V/F Pattern	0	Linear	0: Linear	Δ	p.125
				1	Square			

[12] '10(V3)~11(I3)' of BAS-05 are available when Extension IO option is equipped. Refer to Extension IO option manual for more detailed information.

Code	Comm. Address	Name	LCD Display	Setting Range		Initial value	Property*	Ref.
				2	User V/F			
				3	Square 2			
08	0h1208	Acc/Dec standard frequency	Ramp T Mode	0	Max Freq	0: Max Freq	Δ	p.114
				1	Delta Freq			
09	0h1209	Time scale settings	Time Scale	0	0.01 sec	1: 0.1 sec	Δ	p.114
				1	0.1 sec			
				2	1 sec			
10	0h120A	Input power frequency	60/50 Hz Sel	0	60 Hz	0: 60 Hz	Δ	p.255
				1	50 Hz			
11	0h120B	Number of motor poles	Pole Number	2-48		Dependent on motor setting	Δ	p.162
12	0h120C	Rated slip speed	Rated Slip	0-3000 (RPM)			Δ	p.162
13	0h120D	Motor rated current	Rated Curr	1.0-1000.0 (A)			Δ	p.162
14	0h120E	Motor no-load current	NoloadCur r	0.0-1000.0 (A)			Δ	p.162
15	0h120F	Motor rated voltage	Rated Volt	0, 170-480 (V)		0	Δ	p.131
16	0h1210	Motor efficiency	Efficiency	70-100 (%)		Dependent on motor setting	Δ	p.219
18	0h1212	Trim power display	Trim Power %	70-130 (%)		100	O	-
19	0h1213	Input power voltage	AC Input Volt	170~ 264V	0.75~ 18.5kW	220 V	O	p.255
				320~	0.75~	380 V		

Code	Comm. Address	Name	LCD Display	Setting Range		Initial value	Property*	Ref.
				528V	90kW			
				320~ 550V	110~ 500kW			
20	-	Auto Tuning	Auto Tuning	0	None	0: None	Δ	p.219
				1	All (Rotation type)			
				2	All (Static type)			
				3	Rs+ Lsigma (Rotation type)			
21	-	Stator resistor	Rs	0.000-9.999 (Ω)		Dependent on motor setting	Δ	p.219
22	-	Leakage inductance	Lsigma	0.00-99.99 (mH)			Δ	p.219
41[13]	0h1229	User frequency1	User Freq 1	0.00 - Maximum frequency (Hz)		15.00	Δ	p.127
42	0h122A	User voltage1	User Volt 1	0–100 (%)		25	Δ	p.127
43	0h122B	User frequency2	User Freq 2	0.00-Maximum frequency (Hz)		30.00	Δ	p.127
44	0h122C	User voltage2	User Volt 2	0-100 (%)		50	Δ	p.127
45	0h122D	User frequency3	User Freq 3	0.00 - Maximum frequency (Hz)		45.00	Δ	p.127
46	0h122E	User voltage3	User Volt 3	0-100 (%)		75	Δ	p.127
47	0h122F	User frequency4	User Freq 4	0.00 - Maximum frequency (Hz)		60.00	Δ	p.127
48	0h1230	User voltage4	User Volt 4	0-100 (%)		100	Δ	p.127

[13]BAS-41–48 are displayed when BAS-07 or M2-25 is set to '2 (User V/F).

Code	Comm. Address	Name	LCD Display	Setting Range	Initial value	Property*	Ref.
50[14]	0h1232	Multi-step speed frequency1	Step Freq-1	Low Freq- High Freq	10.00	O	p.104
51	0h1233	Multi-step speed frequency2	Step Freq-2	Low Freq- High Freq	20.00	O	p.104
52	0h1234	Multi-step speed frequency3	Step Freq-3	Low Freq- High Freq	30.00	O	p.104
53	0h1235	Multi-step speed frequency4	Step Freq-4	Low Freq- High Freq	40.00	O	p.104
54	0h1236	Multi-step speed frequency5	Step Freq-5	Low Freq- High Freq	50.00	O	p.104
55	0h1237	Multi-step speed frequency6	Step Freq-6	Low Freq- High Freq	60.00	O	p.104
56	0h1238	Multi-step speed frequency7	Step Freq-7	Low Freq-High Freq	60.00	O	p.104
70	0h1246	Multi-step deceleration time1	Acc Time-1	0.0-600.0 (sec)	20.0	O	p.118
71	0h1247	Multi-step deceleration time1	Dec Time-1	0.0-600.0 (sec)	20.0	O	p.118
72[15]	0h1248	Multi-step deceleration time2	Acc Time-2	0.0-600.0 (sec)	30.0	O	p.118

[14]BAS-50–56 are displayed whenIN-65-71 is set to'Speed–L/M/H.

[15] BAS-72–83 are displayed when IN-65–71is set to'Xcel-L/M/H'

Code	Comm. Address	Name	LCD Display	Setting Range	Initial value	Property*	Ref.
73	0h1249	Multi-step deceleration time2	Dec Time-2	0.0-600.0 (sec)	30.0	O	p.118
74	0h124A	Multi-step deceleration time3	Acc Time-3	0.0-600.0 (sec)	40.0	O	p.118
75	0h124B	Multi-step deceleration time3	Dec Time-3	0.0-600.0 (sec)	40.0	O	p.118
76	0h124C	Multi-step acceleration time4	Acc Time-4	0.0-600.0 (sec)	50.0	O	p.118
77	0h124D	Multi-step acceleration time4	Dec Time-4	0.0-600.0 (sec)	50.0	O	p.118
78	0h124E	Multi-step acceleration time5	Acc Time-5	0.0-600.0 (sec)	40.0	O	p.118
79	0h124F	Multi-step acceleration time5	Dec Time-5	0.0-600.0 (sec)	40.0	O	p.118
80	0h1250	Multi-step acceleration time6	Acc Time-6	0.0-600.0 (sec)	30.0	O	p.118
81	0h1251	Multi-step deceleration time6	Dec Time-6	0.0-600.0 (sec)	30.0	O	p.118
82	0h1252	Multi-step acceleration time7	Acc Time-7	0.0-600.0 (sec)	20.0	O	p.118
83	0h1253	Multi-step acceleration time7	Dec Time-7	0.0-600.0 (sec)	20.0	O	p.118

8.3 Expanded Function Group (ADV)

Data in the following table will be displayed only when the related code has been selected.

***O: Write-enabled during operation, Δ: Write-enabled when operation stops, X: Write-disabled**

Code	Comm. Address	Name	LCD Display	Setting Range		Initial Value	Property*	Ref.
00	-	Jump Code	Jump Code	1-99		24	O	p.70
01	0h1301	Acceleration pattern	Acc Pattern	0	Linear	0: Linear	Δ	p.121
02	0h1302	Deceleration pattern	Dec Pattern	1	S-curve		Δ	p.121
03[16]	0h1303	S-curve acceleration start point gradient	Acc S Start	1–100 (%)		40	Δ	p.121
04	0h1304	S-curve acceleration end point gradient	Acc S End	1–100 (%)		40	Δ	p.121
05[17]	0h1305	S-curve deceleration start point gradient	Dec S Start	1–100 (%)		40	Δ	p.121
06	0h1306	S-curve deceleration end point gradient	Dec S End	1–100 (%)		40	Δ	p.121
07	0h1307	Start Mode	Start Mode	0	Acc	0: Acc	Δ	p.132
				1	DC-Start			
08	0h1308	Stop Mode	Stop Mode	0	Dec	0: Dec	Δ	p.133
				1	DC-Brake			

[16]ADV-03–04 are displayed when ADV-01 is set to '1 (S-curve).

[17]ADV-05–06 are displayed when ADV-02 is set to '1 (S-curve).

Code	Comm. Address	Name	LCD Display	Setting Range		Initial Value		Property*	Ref.
				2	Free-Run				
				4	Power Braking				
09	0h1309	Selection of prohibited rotation direction	Run Prevent	0	None	0: None		Δ	p.110
				1	Forward Prev				
				2	Reverse Prev				
10	0h130A	Starting with power on	Power-on Run	0	No	0: No		O	p.111
				1	Yes				
11[18]	0h130B	Power-on run delay time	Power-On Delay	0.0 -6000.0 (sec)		0.0		O	p.111
12[19]	0h130C	DC braking time at startup	DC-Start Time	0.00-60.00 (sec)		0.00		Δ	p.132
13	0h130D	Amount of applied DC	DC Inj Level	0–200 (%)		50		Δ	p.132
14[20]	0h130E	Output blocking time before DC braking	DC-Block Time	0.00- 60.00 (sec)		0.00	0.75~ 90kW	Δ	p.133
						2.00	110~ 500kW		
15	0h130F	DC braking time	DC-Brake Time	0.00- 60.00 (sec)		1.00		Δ	p.133
16	0h1310	DC braking rate	DC-Brake Level	0–200 (%)		50		Δ	p.133
17	0h1311	DC braking	DC-	Startfrequency-		5.00		Δ	p.133

[18]ADV-11 is displayed when ADV-10 is set to '1 (YES).

[19]ADV-12 is displayed when ADV-07 is set to '1 (DC-Start)'.

[20]ADV-14 is displayed when ADV-08 is set to '1 (DC-Brake)'.

Code	Comm. Address	Name	LCD Display	Setting Range	Initial Value	Property*	Ref.
		frequency	Brake Freq	60 Hz			
20	0h1314	Dwell frequency on acceleration	Acc Dwell Freq	Start frequency-Maximum frequency (Hz)	5.00	Δ	p.160
21	0h1315	Dwell operation time on acceleration	Acc Dwell Time	0.0-60.0 (sec)	0.0	Δ	p.160
22	0h1316	Dwell frequency on deceleration	Dec Dwell Freq	Start frequency-Maximum frequency (Hz)	5.00	Δ	p.160
23	0h1317	Dwell operation time on deceleration	Dec Dwell Time	0.0-60.0 (sec)	0.0	Δ	p.160
24	0h1318	Frequency limit	Freq Limit	0 No 1 Yes	0: No	Δ	p.137
25	0h1319	Frequency lower limit value	Freq Limit Lo	0.00-Upper limit frequency (Hz)	0.50	Δ	p.137
26	0h131A	Frequency upper limit value	Freq Limit Hi	Lower limit frequency-Maximum frequency (Hz)	Max freq	Δ	p.137
27	0h131B	Frequency jump	Jump Freq	0 No 1 Yes	0: No	Δ	p.140
28[21]	0h131C	Jump frequency lower limit1	Jump Lo 1	0.00-Jump frequency upper limit1 (Hz)	10.00	O	p.140
29	0h131D	Jump frequency	Jump Hi 1	Jump frequency lower limit1-	15.00	O	p.140

[21] ADV-28–33 are displayed when ADV-27 is set to '1 (Yes)'.

Code	Comm. Address	Name	LCD Display	Setting Range		Initial Value	Property*	Ref.
		upper limit1		Maximum frequency (Hz)				
30	0h131E	Jump frequency lower limit2	Jump Lo 2	0.00-Jump frequency upper limit2 (Hz)		20.00	O	p.140
31	0h131F	Jump frequency upper limit2	Jump Hi 2	Jump frequency lower limit2-Maximum frequency (Hz)		25.00	O	p.140
32	0h1320	Jump frequency lower limit3	Jump Lo 3	0.00-Jump frequency upper limit3 (Hz)		30.00	O	p.140
33	0h1321	Jump frequency upper limit3	Jump Hi 3	Jump frequency lower limit3-Maximum frequency (Hz)		35.00	O	p.140
50	0h1332	Energy saving operation	E-Save Mode	0	None	0: None	Δ	p.242
				1	Manual			
				2	Auto			
51[22]	0h1333	Energy saving level	Energy Save	0–30 (%)		0	O	p.242
52	0h1334	Energy saving point search time	E-Save Det T	0.0-100.0 (sec)		20.0	Δ	p.242
60	0h133C	Acc/Dec time transition frequency	Xcel Change Fr	0.00-Maximum frequency (Hz)		0.00	Δ	p.120
64	0h1340	Cooling fan	Fan	0	During Run	0: During Run	O	

[22] ADV-51 is displayed when ADV-50 is set to '1 (Manual)'.
ADV-52 is displayed when ADV-50 is set to '2 (Auto)'.

Code	Comm. Address	Name	LCD Display	Setting Range		Initial Value	Property*	Ref.
		control	Control	1	Always ON			p.254
				2	Temp Control			
65	0h1341	Up/Down operation frequency save	U/D Save Mode	0	No	0: No	O	p.155
				1	Yes			
66	0h1342	Output contact On/Off control options	On/Off Ctrl Src	0	None	0: None	O	p.294
				1	V1			
				3	V2			
				4	I2			
				6	Pulse			
				7 [23]	V3			
				8	I3			
67	0h1343	Output contact On level	On-Ctrl Level	Output contact off level-100.00%		90.00	Δ	p.294
68	0h1344	Output contact Off level	Off-Ctrl Level	-100.00-outputcontact on level (%)		10.00	Δ	p.294
70	0h1346	Safe operation selection	Run En Mode	0	Always Enable	0: Always Enable	Δ	p.158
				1	DI Dependent			
71[24]	0h1347	Safe operation	Run Dis Stop	0	Free-Run	0: Free-Run	Δ	p.158
				1	Q-Stop			

[23] '10(V3)~11(I3)' of ADV-66 are available when Extension IO option is equipped. Refer to Extension IO option manual for more detailed information.

[24] ADV-71–72 are displayed when ADV-70 is set to '1 (DI Dependent).

		stop options		2	Q-Stop Resume			
72	0h1348	Safe operation deceleration time	Q-Stop Time	0.0-600.0 (sec)		5.0	O	p.158
74	0h134A	Selection of regeneration evasion function for press	RegenAvdSel	0	No	0: No	Δ	p.301
				1	Yes			
75	0h134B	Voltage level of regeneration evasion motion for press	RegenAvd Level	200 V: 300-400 V		350	Δ	p.301
				400 V: 600-800 V		700		
76[25]	0h134C	Compensation frequency limit of regeneration evasion for press	CompFreq Limit	0.00-10.00 Hz		1.00	Δ	p.301
77	0h134D	Regeneration evasion for press P-Gain	RegenAvdPgain	0.0-100.0%		50.0	O	p.301
78	0h134E	Regeneration evasion for press I gain	RegenAvdIgain	20–30000 (msec)		500	O	p.301

www.nicsanat.com
021-87700210
NIC SANAT
نیک صنعت

[25]ADV-76–78 are displayed when ADV-74 is set to'1 (Yes).

8.4 Control Function Group (CON)

Data in the following table will be displayed only when the related code has been selected.

***O: Write-enabled during operation, Δ: Write-enabled when operation stops, X: Write-disabled**

Code	Comm. Address	Name	LCD Display	Setting Range		Initial Value		Property*	Ref.
00	-	Jump Code	Jump Code	1-99		4		O	p.70
04	0h1404	Carrier frequency	Carrier Freq	1.0~15.0 (kHz)		0.75~90 kW	3.0	O	p.250
				1.0~5.0 (kHz)		110~355 kW	2.0		
				1.0~4.0 (kHz)		400~500 kW	1.5		
05	0h1405	Switching mode	PWM Mode	0	Normal PWM	0: Normal PWM		Δ	p.250
				1	Low leakage PWM				
13	0h140D	Anti-hunting regulator mode	AHR Sel	0	No	1 : Yes		Δ	p.239
				1	Yes				
14	0h140E	Anti-hunting regulator P-Gain	AHR P-Gain	0-32767		1000		O	p.239
15	0h140F	Anti-hunting regulator start frequency	AHR Low Freq	0.00-AHR High Freq		0.50		O	p.239
16	0h1410	Anti-hunting regulator end frequency	AHR High Freq	AHR Low Freq-400.00		400.00		O	p.239
17	0h1411	Anti-hunting	AHR limit	0-20		2		O	p.239

Code	Comm. Address	Name	LCD Display	Setting Range		Initial Value	Property*	Ref.
		regulator compensation voltage limit rate						
21[26]	0h1415	Auto torque boost filter gain	ATB Filt Gain	1 – 9999 (msec)		10	O	p.130
22	0h1416	Auto torque boost voltage	ATB Volt Gain	0.0-300.0%		100.0	O	p.130
70	0h1446	Speed search mode selection	SS Mode	0	Flying Start-1	0: Flying Start-1	Δ	p.243
				1	Flying Start-2			
71	0h1447	Speed search operation selection	Speed Search	Bit	0000-1111	0000	Δ	p.243
				Bit 0	Speed search on acceleration			
				Bit 1	Restart after trips (other than LV trip)			
				Bit 2	Restart after instantaneous interruption			

[26]CON-21–22 are displayed when DRV-15 is set to'Auto 2.

Code	Comm. Address	Name	LCD Display	Setting Range		Initial Value		Property*	Ref.
				Bit 3	Power-on run				
72[27]	0h1448	Speed search reference current	SS Sup-Current	50–120 (%)		90	0.75~ 250kW	O	p.243
						80	315~ 500kW		
73[28]	0h1449	Speed search proportional gain	SS P-Gain	0-9999		Flying Start-1 : 100		O	p.243
						Flying Start-2 : Dependent on motor setting			
74	0h144A	Speed search integral gain	SS I-Gain	0-9999		Flying Start-1 : 200		O	p.243
						Flying Start-2 : Dependent on motor setting			
75	0h144B	Output block time before speed search	SS Block Time	0.0-60.0 (sec)		1.0		Δ	p.243
77	0h144D	Energy buffering selection	KEB Select	0	No	0: No		Δ	p.197
				1	Yes				
78[29]	0h144E	Energy buffering start level	KEB Start Lev	110.0-140.0 (%)		125.0	0.75~ 90kW	Δ	p.197
						115.0	110~ 500kW		
79	0h144F	Energy buffering stop level	KEB Stop Lev	KEB Start Lev* 125.0-145.0 (%)		130.0	0.75~ 90kW	Δ	p.197
						125.0	110~		

[27]CON-72 is displayed after Flying Start-1 and when any CON-71 bit is set to'1.

[28]CON-73–75 are displayed when any CON-71bit is set to'1.

[29]CON-78–83 are displayed when CON-77 is set to'1 (Yes).

Code	Comm. Address	Name	LCD Display	Setting Range	Initial Value		Property*	Ref.
						500kW		
80	0h1450	Energy buffering slip gain	KEB Slip Gain buffering slip gain	0-20000	300		O	p.197
81	0h1451	Energy buffering P-Gain	KEB P Gain	0-20000	1000		O	p.197
82	0h1452	Energy buffering I gain	KEB I Gain	1-20000	500		O	p.197
83	0h1453	Energy buffering acceleration time	KEB Acc Time	0.0-600.0	10.0	0.75~90kW	O	p.197
					30.0	110~500kW		

8.5 Input Terminal Group (IN)

Data In the following table will be displayed only when the related code has been selected.

***O: Write-enabled during operation, Δ: Write-enabled when operation stops, X: Write-disabled**

Code	Comm. Address	Name	LCD Display	Setting Range	Initial Value	Property*	Ref.
00	-	Jump Code	Jump Code	1-99	65	O	p.70
01	0h1501	Frequency at maximum analog input	Freq at 100%	Start frequency-Maximum frequency (Hz)	Maximum frequency	O	p.90
05[30]	0h1505	V1 input	V1	0~12.00(V) or	0.00	X	p.90

[30] 'IN-05' setting range can be changed according to the 'IN-06' settings.

Code	Comm. Address	Name	LCD Display	Setting Range		Initial Value	Property*	Ref.
		voltage display	Monitor(V)	-12.00~12.00 (V)				
06	0h1506	V1 input polarity selection	V1 Polarity	0	Unipolar	0: Unipolar	Δ	p.90
				1	Bipolar			
07	0h1507	Time constant of V1 input filter	V1 Filter	0–10000 (ms)		10	O	p.90
08	0h1508	V1 minimum input voltage	V1 Volt x1	0.00-10.00 (V)		0.00	O	p.90
09	0h1509	Output at V1 minimum voltage (%)	V1 Perc y1	0.00-100.00 (%)		0.00	O	p.90
10	0h150A	V1 maximum input voltage (%)	V1 Volt x2	0.00-12.00 (V)		10.00	O	p.90
11	0h150B	Output at V1 maximum voltage (%)	V1 Perc y2	0.00-100.00 (%)		100.00	O	p.90
12[31]	0h150C	V1 input at minimum voltage (%)	V1 –Volt x1′	-10.00- 0.00 (V)		0.00	O	p.93
13	0h150D	Output at V1 minimum voltage (%)	V1 –Perc y1′	-100.00-0.00 (%)		0.00	O	p.93
14	0h150E	V1 maximum input voltage (%)	V1 –Volt x2′	-12.00- 0.00 (V)		-10.00	O	p.93
15	0h150F	Output at V1 maximum voltage (%)	V1 –Perc y2′	-100.00-0.00 (%)		-100.00	O	p.93
16	0h1510	V2 rotation	V1 Inverting	0	No	0: No	O	p.90

[31]IN-12–17 are displayed when IN-06 is set to'1 (Bipolar).

Code	Comm. Address	Name	LCD Display	Setting Range		Initial Value	Property*	Ref.
		direction change		1	Yes			
17	0h1511	V1quantization change	V1 Quantizing	0.00[32], 0.04-10.00 (%)		0.04	O	p.90
20[33]	0h1514	Temperature monitor	T1 Monitor	0.00 - 100.00 (%)		-	X	p.323
35[34]	0h1523	V2 input rate monitor	V2 Monitor (V)	0.00-12.00 (V)		0.00	O	p.99
37	0h1525	V2 input filter time	V2 Filter	0-10000 (msec)		10	O	p.99
38	0h1526	V2 minimum input voltage	V2 Volt x1	0.00-10.00 (V)		0.00	O	p.99
39	0h1527	Output at V2 minimum voltage (%)	V2 Perc y1	0.00-100.00 (%)		0.00	O	p.99
40	0h1528	V2 maximum input voltage	V2 Volt x2	0.00-10.00 (V)		10.00	O	p.99
41	0h1529	Output at V2 maximum voltage (%)	V2 Perc y2	0.00-100.00 (%)		100.00	O	p.99
46	0h152E	V2 Rotation direction options	V2 Inverting	0	No	0: No	O	p.99
				1	Yes			
47	0h152F	V2 Quantizing level	V2 Quantizing	0.00[35],		0.04	O	p.99

[32]* Quantizing is disabled if '0' is selected.

[33]IN-20 is displayed when the analog current/voltage input circuit selection switch (SW3) is selected on T1.

[34]IN-35–47 are displayed when the analog current/voltage input circuit selection switch (SW4) is selected on V2.

[35]* Quantizing is disabled if '0' is selected.

Code	Comm. Address	Name	LCD Display	Setting Range		Initial Value	Property*	Ref.
				0.04- 10.00 (%)				
50[36]	0h1532	I2 input monitor	I2 Monitor (mA)	0–24 (mA)		0	O	p.96
52	0h1534	I2 input filter time	I2 Filter	0–10000 (msec)		10	O	p.96
53	0h1535	I2 minimum input power supply	I2 Curr x1	0.00-20.00 (mA)		4.00	O	p.96
54	0h1536	Output at I2 maximum current (%)	I2 Perc y1	0.00-100.00 (%)		0.00	O	p.96
55	0h1537	I2 maximum input current	I2 Curr x2	0.00-24.00 (mA)		20.00	O	p.96
56	0h1538	Output at I2 maximum current (%)	I2 Perc y2	0.00-100.00 (%)		100.00	O	p.96
61	0h153D	I2 rotation direction options	I2 Inverting	0	No	0: No	O	p.96
				1	Yes			
62	0h153E	I2 Quantizing level	I2 Quantizing	0.00[37] 0.04-10.00 (%)		0.04	O	p.96
65	0h1541	P1 Px terminal configuration	P1 Define	0	None	1: Fx	Δ	p.106
				1	Fx			
66	0h1542	P2 Px terminal configuration	P2 Define	2	Rx	2: Rx	Δ	p.106
67	0h1543	P3 Px terminal configuration	P3 Define	3	RST	5: BX	Δ	p.343
68	0h1544	P4 Px terminal	P4 Define	4	External	3: RST	Δ	p.342

[36]IN-50–62 are displayed when the analog current/voltage input circuit selection switch (SW5) is selected on I2.

[37]* Quantizing is disabled if '0' is selected.

Code	Comm. Address	Name	LCD Display	Setting Range		Initial Value	Property*	Ref.
		configuration			Trip			
69	0h1545	P5 Px terminal configuration	P5 Define	5	BX	7: Sp-L	Δ	p.342
70	0h1546	P6 Px terminal configuration	P6 Define	6	JOG	8: Sp-M	Δ	p.153
71	0h1547	P7 Px terminal configuration	P7 Define	7	Speed-L	9: Sp-H	Δ	p.104
				8	Speed-M			p.104
				9	Speed-H			p.104
				11	XCEL-L			p.118
				12	XCEL-M			p.118
				13	XCEL-H			p.118
				14	XCEL Stop			p.124
				15	RUN Enable			p.158
				16	3-Wire			p.157
				17	2nd Source			p.141
				18	Exchange			p.253
				19	Up			p.155
				20	Down			p.155
				22	U/D Clear			p.155
				23	Analog Hold			p.102
				24	I-Term Clear			p.164
				25	PID Openloop			p.164

Code	Comm. Address	Name	LCD Display	Setting Range		Initial Value	Property*	Ref.
				26	PID Gain2			p.164
				27	PID Ref Change			p.124
				28	2nd Motor			p.251
				29	Interlock 1			p.286
				30	Interlock 2			p.286
				31	Interlock 3			p.286
				32	Interlock 4			p.286
				33	Interlock 5			p.286
				34	Pre Excite			-
				35	Timer In			p.265
				37	dis Aux Ref			p.147
				38	FWD JOG			p.154
				39	REV JOG			p.154
				40	Fire Mode			p.240
				41	EPID1 Run			p.184
				42	EPID1 ItermClr			p.184
				43	Time Event En			p.222
				44	Pre Heat			p.216
				45	Damper Open			p.194

Code	Comm. Address	Name	LCD Display	Setting Range		Initial Value	Property*	Ref.
				46	PumpClean			p.200
				47	EPID2 Run			p.184
				48	EPID2 ItermClr			p.184
				49	Sleep Wake Chg			p.184
				50	PID Step Ref L			p.164
				51	PID Step Ref M			p.164
				52	PID Step Ref H			p.164
				53[38]	Interlock 6			
				54	Interlock 7			
				55	Interlock 8			
83	0h1553	DI On Delay Selection	DI On DelayEn	000 0000 ~ 111 1111		111 1111	Δ	
84	0h1554	DI Off Delay Selection	DI Off DelayEn	000 0000 ~ 111 1111		111 1111	Δ	
85	0h1555	Multi-function input terminal On filter	DI On Delay	0–10000 (msec)		10	O	p.142

[38] '53(Interlock6)~55(Interlock8)' of IN-65~71 are available when Extension IO option is equipped. Refer to Extension IO option manual for more detailed information

Code	Comm. Address	Name	LCD Display	Setting Range		Initial Value	Property*	Ref.
86	0h1556	Multi-function input terminal Off filter	DI Off Delay	0–10000 (msec)		3	O	p.142
87	0h1557	Multi-function input terminal selection	DI NC/NO Sel	P7 – P1		000 0000	Δ	p.142
				0	A Terminal (NO)			
				1	B Terminal (NC)			
89	0h1559	Multi-step command delay time	InCheck Time	1–5000 (msec)		1	Δ	p.104
90	0h155A	Multi-function input terminal status	DI Status	P7 – P1		000 0000	O	p.142
				0	Contact (Off)			
				1	Contact (On)			
91	0h155B	Pulse input amount display	TI Monitor	0.00-50.00 (kHz)		0.00	X	p.100
92	0h155C	TI minimum input pulse	TI Filter	0–9999 (msec)		10	O	p.100
93	0h155D	TI minimum input pulse	TI Pls x1	0 - TI Pls x2		0.00	O	p.100
94	0h153E	Output at TI minimum pulse (%)	TI Perc y1	0.00-100.00 (%)		0.00	O	p.100
95	0h155F	TI maximum input pulse	TI Pls x2	TI Pls x1-32.00		32.00	O	p.100
96	0h1560	Output at TI maximum pulse (%)	TI Perc y2	0.00-100.00 (%)		100.00	O	p.100
97	0h1561	TI rotation	TI Inverting	0	No	0: No	O	

		direction change		1	Yes			p.100
98	0h1562	TI quantization level	TI Quantizing	0.00[39], 0.04-10.00 (%)		0.04	O	p.100

[39] Quantizing is disabled if '0' is selected.

www.nicsanat.com
021-87700210
NIC SANAT
نیک صنعت

8.6 Output Terminal Block Function Group (OUT)

Data in the following table will be displayed only when the related code has been selected.

*O: Write-enabled during operation, Δ: Write-enabled when operation stops, X: Write-disabled

Code	Comm. Address	Name	LCD Display	Parameter Setting		Initial Value	Property*	Ref.
00	-	Jump Code	Jump Code	1-99		30	O	p.70
01	0h1601	Analog output1	AO1 Mode	0	Frequency	0: Frequency	O	p.303
				1	Output Current			
				2	Output Voltage			
				3	DCLink Voltage			
				4	Output Power			
				7	Target Freq			
				8	Ramp Freq			
				9	PID Ref Value			
				10	PID Fdb Value			
				11	PID Output			
				12	Constant			
				13	EPID1 Output			
				14	EPID1 RefVal			
				15	EPID1 FdbVal			
				16	EPID2 Output			
				17	EPID2 RefVal			
				18	EPID2 FdbVal			
02	0h1602	Analog output1 gain	AO1 Gain	-1000.0-1000.0 (%)		100.0	O	p.303
03	0h1603	Analog	AO1 Bias	-100.0-100.0 (%)		0.0	O	p.303

Code	Comm. Address	Name	LCD Display	Parameter Setting		Initial Value	Property*	Ref.
		output1 bias						
04	0h1604	Analog output1 filter	AO1 Filter	0–10000 (msec)		5	O	p.303
05	0h1605	Analog constant output1	AO1 Const %	0.0-100.0 (%)		0.0	O	p.303
06	0h1606	Analog output1 monitor	AO1 Monitor	0.0-1000.0 (%)		0.0	X	p.303
07	0h1607	Analog output2	AO2 Mode	Identical to the OUT-02 AO1 Mode selected range		0: Frequency	O	p.303
08	0h1608	Analog output2 gain	AO2 Gain	-1000.0-1000.0 (%)		100.0	O	p.303
09	0h1609	Analog output2 bias	AO2 Bias	-100.0-100.0 (%)		0.0	O	p.303
10	0h160A	Analog output2 filter	AO2 Filter	0–10000 (msec)		5	O	p.303
11	0h160B	Analog constant output2	AO2 Const %	0.0-100.0 (%)		0.0	O	p.303
12	0h160C	Analog output2 monitor	AO2 Monitor	0.0-1000.0 (%)		0.0	X	p.303
30	0h161E	Fault output item	Trip OutMode	bit	000-111	010	O	p.314
				Bit 0	Low voltage			
				Bit 1	Any faults other than low			

Code	Comm. Address	Name	LCD Display	Parameter Setting		Initial Value	Property*	Ref.
					voltage			
				Bit 2	Automatic restart final failure			
31	0h161F	Multi-function relay1	Relay 1	0	None	23:Trip	O	p.308
				1	FDT-1			
				2	FDT-2			
				3	FDT-3			
				4	FDT-4			
				5	Over Load			
				6	IOL			
				7	Under Load			
				8	Fan Warning			
				9	Stall			
				10	Over Voltage			
				11	Low Voltage			
				12	Over Heat			
				13	Lost Command			
				14	Run			
				15	Stop			
				16	Steady			
				17	Inverter Line			
				18	Comm Line			
				19	Speed Search			
				20	Ready			
				21	MMC			
				22	Timer Out			

Code	Comm. Address	Name	LCD Display	Parameter Setting		Initial Value	Property*	Ref.
				23	Trip			
				24	Lost Keypad			
				25	DB Warn%ED			
				26	On/Off Control			
				27	Fire Mode			
				28	Pipe Broken			
				29	Damper Err			
				30	Lubrication			
				31	Pump Clean			
				32	Level Detect			
				33	Damper Control			
				34	CAP.Warning			
				35	Fan Exchange			
32	0h1620	Multi-function relay2	Relay 2	36	AUTO State	14: RUN	O	p.308
33	0h1621	Multi-function relay3	Relay 3	37	Hand State	0: None	O	p.308
34	0h1622	Multi-function relay4	Relay 4	38	TO	0: None	O	p.308
35	0h1623	Multi-function relay5	Relay 5	39	Except Date	0: None	O	p.308
36	0h1624	Multi-function 1 item	Q1 Define	40	KEB Operating	0: None	O	p.308
				41	BrokenBelt			
41	0h1629	Multi-	DO	DO Status		00 0000	X	p.308

Code	Comm. Address	Name	LCD Display	Parameter Setting		Initial Value	Property*	Ref.
		function output monitor	Status					
50	0h1632	Multi-function output On delay	DO On Delay	0.00-100.00 (sec)		0.00	O	p.315
51	0h1633	Multi-function output Off delay	DO Off Delay	0.00-100.00 (sec)		0.00	O	p.315
52	0h1634	Multi-function output contact selection	DO NC/NO Sel	Q1,Relay5-Relay1		00 0000	Δ	p.315
				0	A contact (NO)			
				1	B contact (NC)			
53	0h1635	Fault output On delay	TripOut OnDly	0.00-100.00 (sec)		0.00	O	p.314
54	0h1636	Fault output Off delay	TripOut OffDly	0.00-100.00 (sec)		0.00	O	p.314
55	0h1637	Timer On delay	TimerOn Delay	0.00-100.00 (sec)		0.00	O	p.264
56	0h1638	Timer Off delay	TimerOff Delay	0.00-100.00 (sec)		0.00	O	p.264
57	0h1639	Detected frequenc y	FDT Frequen cy	0.00-Maximum frequency (Hz)		30.00	O	p.308
58	0h163A	Detected frequenc y band	FDT Band	0.00-Maximum frequency (Hz)		10.00	O	p.308
61	0h163D	Pulse output	TO Mode	0	Frequency	0: Frequency	O	p.306
				1	Output			

Code	Comm. Address	Name	LCD Display	Parameter Setting		Initial Value	Property*	Ref.
		item			Current			
				2	Output Voltage			
				3	DCLink Voltage			
				4	Output Power			
				7	Target Freq			
				8	Ramp Freq			
				9	PID Ref Value			
				10	PID Fdb Value			
				11	PID Output			
				12	Constant			
				13	EPID1 Output			
				14	EPID1 RefVal			
				15	EPID1 FdbVal			
				16	EPID2 Output			
				17	EPID2 RefVal			
				18	EPID2 FdbVal			
62	0h163E	Pulse output gain	TO Gain	-1000.0-1000.0 (%)		100.0	O	p.306
63	0h163F	Pulse output bias	TO Bias	-100.0-100.0 (%)		0.0	O	p.306
64	0h1640	Pulse output filter	TO Filter	0–10000 (msec)		5	O	p.306
65	0h1641	Pulse output constant output 2	TO Const %	0.0-100.0 (%)		0.0	O	p.306

Code	Comm. Address	Name	LCD Display	Parameter Setting	Initial Value	Property*	Ref.
66	0h1642	Pulse output monitor	TO Monitor	0.0-1000.0 (%)	0.0	X	p.306

8.7 Communication Function Group (COM)

Data in the following table will be displayed only when the related code has been selected.

***O: Write-enabled during operation, Δ: Write-enabled when operation stops, X: Write-disabled**

Code	Comm. Address	Name	LCD Display	Parameter Setting		Initial Value	Property*	Ref.
00	-	Jump Code	Jump Code	1-99		20	O	p.70
01	0h1701	Built-in communication inverter ID	Int485 St ID	1-MaxComID[40]		1	O	p.357
02	0h1702	Built-in communication protocol	Int485 Proto	0	ModBus RTU	0: ModBusRTU	O	p.357
				2	LS Inv 485			
				4	BACnet			
				5	Metasys-N2			
				6[41]	ModBus Master			
03	0h1703	Built-in communic	Int485 BaudR	0	1200 bps	3: 9600 bps	O	p.357
				1	2400 bps			

[40] If AP1-40 is set to '4(Serve Drv), MaxComID is '8, and if COM-02 is set to '4(BACnet), MaxComID is '127. Otherwise MaxComID is '250.

[41] COM-02 is automatically set to '6(Modbus Master)' when AP1-40 is set to '2 or 3. Otherwise a user can set the parameter value at user's choice.

Code	Comm. Address	Name	LCD Display	Parameter Setting		Initial Value	Property*	Ref.
		ation speed		2	4800 bps			
				3	9600 bps			
				4	19200 bps			
				5	38400 bps			
				6	56 Kbps			
				7	76.8 kbps			
				8	115.2 Kbps[42]			
04	0h1704	Built-in communication frame setting	Int485 Mode	0	D8/PN/S1	0: D8/PN/S1	O	p.357
				1	D8/PN/S2			
				2	D8/PE/S1			
				3	D8/PO/S1			
05	0h1705	Transmission delay after reception	Resp Delay	0-1000 (msec)		5	O	p.357
06[43]	0h1706	Communication option S/W version	FBus S/W Ver	-		-	O	-
07	0h1707	Communication option inverter ID	FBus ID	0-255		1	O	-
08	0h1708	FIELD BUS communication speed	FBUS BaudRate	-		12 Mbps	O	-

[42] 115,200 bps

[43] COM-06–09 are displayed only when a communication option card is installed.
Please refer to the communication option manual for details.

Code	Comm. Address	Name	LCD Display	Parameter Setting		Initial Value	Property*	Ref.
09	0h1709	Communication option LED status	FieldBus LED	-		-	O	-
20	0h1714	BACnet maximum master number	BAC Max Master	1~127		127	O	p.398
21	0h1715	BACnet device number1	BAC Dev Inst1	0~4194		237	O	p.398
22	0h1716	BACnet device number2	BAC Dev Inst2	0-999		0	O	p.398
23	0h1717	BACnet password	BAC PassWord	0-32767		0	O	p.398
28	0h171C	USB Protocol	USB Protocol	0	Modbus RTU	2: LS Inv 485	O	-
				2	LS Inv 485			
30	0h171E	Number of output parameters	ParaStatusNum	0-8		3	O	p.366
31	0h171F	Output Communication address1	Para Status-1	0000-FFFF Hex		000A	O	p.366
32	0h1720	Output Communication address2	Para Status-2	0000-FFFF Hex		000E	O	p.366
33	0h1721	Output Communication address3	Para Statuss-3	0000-FFFF Hex		000F	O	p.366
34	0h1722	Output Communic	Para Status-4	0000-FFFF Hex		0000	O	p.366

Code	Comm. Address	Name	LCD Display	Parameter Setting	Initial Value	Property*	Ref.
		ation address4					
35	0h1723	Output Communication address5	Para Status-5	0000-FFFF Hex	0000	O	p.366
36	0h1724	Output Communication address6	Para Status-6	0000-FFFF Hex	0000	O	p.366
37	0h1725	Output Communication address7	Para Status-7	0000-FFFF Hex	0000	O	p.366
38	0h1726	Output Communication address8	Para Status-8	0000-FFFF Hex	0000	O	p.366
50	0h1732	Number of input parameters	Para Ctrl Num	0-8	2	O	p.366
51	0h1733	Input Communication address1	Para Control-1	0000-FFFF Hex	0005	O	p.366
52	0h1734	Input Communication address2	Para Control-2	0000-FFFF Hex	0006	O	p.366
53	0h1735	Input Communication address3	Para Control-3	0000-FFFF Hex	0000	O	p.366
54	0h1736	Input Communication	Para Control-4	0000-FFFF Hex	0000	O	p.366

Code	Comm. Address	Name	LCD Display	Parameter Setting		Initial Value	Property*	Ref.
		address 4						
55	0h1737	Input Communication address 5	Para Control-5	0000-FFFF Hex		0000	O	p.366
56	0h1738	Input Communication address 6	Para Control-6	0000-FFFF Hex		0000	O	p.366
57	0h1739	Input Communication address 7	Para Control-7	0000-FFFF Hex		0000	O	p.366
58	0h173A	Input Communication address 8	Para Control-8	0000-FFFF Hex		0000	O	p.366
70	0h1746	Communication multi-function input 1	Virtual DI 1	0	None	0: None	O	p.393
71	0h1747	Communication multi-function input 2	Virtual DI 2	1	Fx	0: None	O	p.393
72	0h1748	Communication multi-function input 3	Virtual DI 3	2	Rx	0: None	O	p.393
73	0h1749	Communication multi-function	Virtual DI 4	3	RST	0: None	O	p.393

Code	Comm. Address	Name	LCD Display	Parameter Setting		Initial Value	Property*	Ref.
		input 4						
74	0h174A	Communication multi-function input 5	Virtual DI 5	4	External Trip	0: None	O	p.393
75	0h174B	Communication multi-function input 6	Virtual DI 6	5	BX	0: None	O	p.393
76	0h174C	Communication multi-function input 7	Virtual DI 7	6	JOG	0: None	O	p.393
77	0h174D	Communication multi-function input 8	Virtual DI 8	7	Speed-L	0: None	O	p.393
				8	Speed-M			
				9	Speed-H			
				11	XCEL-L			
				12	XCEL-M			
				13	XCEL-H			
				14	XCEL-Stop			
				15	Run Enable			
				16	3-wire			
				17	2nd source			
				18	Exchange			
				19	Up			
				20	Down			

Code	Comm. Address	Name	LCD Display	Parameter Setting		Initial Value	Property*	Ref.
				22	U/D Clear			
				23	Analog Hold			
				24	I-Term Clear			
				25	PID Openloop			
				26	PID Gain 2			
				27	PID Ref Change			
				28	2nd Motor			
				29	Interlock1			
				30	Interlock2			
				31	Interlock3			
				32	Interlock4			
				33	Interlock5			
				34	Pre Excite			
				35	Timer In			
				37	dis Aux Ref			
				38	FWD JOG			
				39	REV JOG			
				40	Fire Mode			
				41	EPID1 Run			
				42	EPID1 ItermClr			
				43	Time Event En			
				44	Pre Heat			
				45	Damper Open			
				46	Pump Clean			

Code	Comm. Address	Name	LCD Display	Parameter Setting		Initial Value	Property*	Ref.
				47	EPID2 Run			
				48	EPID2 ItermClr			
				49	Sleep Wake Chg			
				50	PID Step Ref L			
				51	PID Step Ref M			
				52	PID Step Ref H			
				53 [44]	Interlock6			
				54	Interlock7			
				55	Interlock8			
86	0h1756	Communication multi-function input monitoring	Virt DI Status	0000 0000 – 1111 1111		0000 0000	Δ	p.362
96	0h173C	Communication operation auto resume	Power On Resume	0	No	0: No	Δ	p.319

8.8 Advanced Function Group(PID Functions)

Data in the following table will be displayed only when the related code has been selected.

[44] '53 (Interlock6)~55(Interlock8)' of ADV-66 are available when Extension IO option is equipped. Refer to Extension IO option manual for more detailed information.

Unit MAX = PID Unit100%(PID-68)

Unit Min = (2xPID Unit 0%(PID-67)-PID Unit 100%)

Unit Default = (PID Unit 100%-PID Unit 0%)/2

Unit Band = Unit 100%-Unit 0%

www.nicsanat.com
021-87700210
NIC SANAT
نیک صنعت

***O /X: Write-enabled during operation,Δ: Writing available when operation stops**

00	-	Jump Code	Jump Code	1–99		50	O	p.70
01	0h1801	PID mode selection	PID Sel	0	No	0: No	Δ	p.164
				1	Yes			
02	0h1802	E-PID selection	E-PID Sel	0	No	0: No	O	p.184
				1	Yes			
03	0h1803	PID output monitor	PID Output	-		-	X	p.164
04	0h1804	PID reference monitor	PID Ref Value	-		-	X	p.164
05	0h1805	PID feedback monitor	PID Fdb Value	-		-	X	p.164
06	0h1806	PID error monitor value	PID Err Value	-		-	X	p.164
10	0h180A	PID reference 1 source selection	PID Ref 1 Src	0	KeyPad	0: Keypad	Δ	p.164
				1	V1			
				3	V2			
				4	I2			
				5	Int485			

Code	Comm. Address	Name	LCD Display	Parameter Setting		Initial Value	Property*	Ref.
				6	Fieldbus			
				8	Pulse			
				9	EPID1 Output			
				10 [45]	V3			
				11	I3			
11	0h180B	PID reference 1 keypad value	PID Ref 1 Set	Unit Min–Unit Max		Unit Default	O	p.164
12	0h180C	PID reference 1 auxiliary source selection	PIDRef1AuxSrc	0	None	0: None	Δ	p.164
				1	V1			
				3	V2			
				4	I2			
				6	Pulse			
				7	Int 485			
				8	FieldBus			
				10	EPID1 Output			
				11	E-PID Fdb Val			
				12 [46]	V3			

[45] '10(V3)~11(I3)' of PID-10 are available when Extension IO option is equipped. Refer to Extension IO option manual for more detailed information.

[46] '12(V3)~13(I3)' of PID-12 are available when Extension IO option is equipped. Refer to Extension IO option manual for more detailed information.

Code	Comm. Address	Name	LCD Display	Parameter Setting		Initial Value	Property*	Ref.
				13	I3			
13	0h180D	PID reference 1 auxiliary mode selection	PID Ref1AuxMod	0	M+(G*A)	0: M+(G*A)	O	p.164
				1	M*(G*A)			
				2	M/(G*A)			
				3	M+(M*(G*A))			
				4	M+G*2*(A-50)			
				5	M*(G*2*(A-50))			
				6	M/(G*2*(A-50))			
				7	M+M*G*2*(A-50)			
				8	(M-A)^2			
				9	M^2+A^2			
				10	MAX(M,A)			
				11	MIN(M,A)			
				12	(M + A)/2			
				13	Root(M+A)			
14	0h180E	PID reference auxiliary gain	PID Ref1 Aux G	-200.0–200.0 (%)		0.0	O	p.164
15	0h180F	PID reference 2 auxiliary source selection	PID Ref 2 Src	0	Keypad	0: KeyPad	Δ	p.164
				1	V1			
				3	V2			
				4	I2			
				5	Int 485			
				6	Fieldbus			
				8	Pulse			

Code	Comm. Address	Name	LCD Display	Parameter Setting		Initial Value	Property*	Ref.
				9	E-PID Output			
				10 [47]	V3			
				11	I3			
16	0h1810	PID reference 2 keypad setting	PID Ref 2 Set	Unit Min–Unit Max		Unit Default	O	p.164
17	0h1811	PID reference 2 auxiliary source selection	PID Ref2AuxSrc	0	None	0: None	Δ	p.164
				1	V1			
				3	V2			
				4	I2			
				6	Pulse			
				7	Int 485			
				8	FieldBus			
				10	EPID1 Output			
				11	EPID1 Fdb Val			
				12 [48]	V3			
				13	I3			
18	0h1812	PID reference 2	PID Ref2AuxM	0	M+(G*A)	0: M+(G*A)	O	p.164
				1	M*(G*A)			

[47] '10(V3)~11(I3)' of PID-15 are available when Extension IO option is equipped. Refer to Extension IO option manual for more detailed information.

[48] '12(V3)~13(I3)' of PID-17 are available when Extension IO option is equipped. Refer to Extension IO option manual for more detailed information.

Code	Comm. Address	Name	LCD Display	Parameter Setting		Initial Value	Property*	Ref.
		auxiliary mode selection	od	2	M/(G*A)			
				3	M+(M*(G*A))			
				4	M+G*2*(A-50)			
				5	M*(G*2*(A-50))			
				6	M/(G*2*(A-50))			
				7	M+M*G*2*(A-50)			
				8	(M-A)^2			
				9	M^2+A^2			
				10	MAX(M,A)			
				11	MIN(M,A)			
				12	(M + A)/2			
				13	Root(M+A)			
19	0h1813	PID reference 2 auxiliary gain	PID Ref2 Aux G	-200.0–200.0 (%)		0.0	O	p.164
20	0h1814	PID feedback selection	PIDFdb Source	0	V1	0: V1	Δ	p.164
				2	V2			
				3	I2			
				4	Int 485			
				5	FieldBus			
				7	Pulse			
				8	EPID1 Output			
				9	EPID1 Fdb Val			
				10	V3			

Code	Comm. Address	Name	LCD Display	Parameter Setting		Initial Value	Property*	Ref.
				[49]				
				11	I3			
21	0h1815	PID feedback auxiliary source selection	PID Fdb Aux Src	0	None	0: None	Δ	p.164
				1	V1			
				3	V2			
				4	I2			
				6	Pulse			
				7	Int 485			
				8	FieldBus			
				10	EPID1 Output			
				11	EPID1 Fdb Val			
				12 [50]	V3			
				13	I3			
22	0h1816	PID feedback auxiliary mode selection	PID FdbAuxMod	0	M+(G*A)	0: M+(G*A)	O	p.164
				1	M*(G*A)			
				2	M/(G*A)			
				3	M+(M*(G*A))			
				4	M+G*2*(A-50)			
				5	M*(G*2*(A-50))			

[49] '10(V3)~11(I3)' of PID-20 are available when Extension IO option is equipped. Refer to Extension IO option manual for more detailed information.

[50] '12(V3)~13(I3)' of PID-21 are available when Extension IO option is equipped. Refer to Extension IO option manual for more detailed information.

Code	Comm. Address	Name	LCD Display	Parameter Setting		Initial Value	Property*	Ref.
				6	M/(G*2*(A-50))			
				7	M+M*G*2*(A-50)			
				8	(M-A)^2			
				9	M^2+A^2			
				10	MAX(M,A)			
				11	MIN(M,A)			
				12	(M+A)/2			
				13	Root(M+A)			
23	0h1817	PID feedback auxiliary gain	PID Fdb Aux G	-200.0–200.0 (%)		0.0	O	p.164
24	0h1818	PID feed back band	PID Fdb Band	0.00 – Unit Band		0.00	O	p.164
25	0h1819	PID controller proportional gain 1	PID P-Gain 1	0.00–300.00 (%)		50.00	O	p.164
26	0h181A	PID controller integral time 1	PID I-Time 1	0.0–200.0 (sec)		10.0	O	p.164
27	0h181B	PID controller differential time 1	PID D-Time 1	0.00–1.00 (sec)		0.00	O	p.164
28	0h181C	PID controller feed forward gain	PID FF-Gain	0.0–1000.0 (%)		0.0	O	p.164
29	0h181D	PID output filter	PID Out LPF	0.00–10.00 (sec)		0.00	O	p.164
30	0h181E	PID output	PID Limit	PID Limit Lo–		100.00	O	p.164

Code	Comm. Address	Name	LCD Display	Parameter Setting		Initial Value	Property*	Ref.
		upper limit	Hi	100.00				
31	0h181F	PID output lower limit	PID Limit Lo	-100.00–PID Limit Hi		0.00	O	p.164
32	0h1820	PID controller proportional gain 2	PID P-Gain 2	0.00–300.00 (%)		50.0	O	p.164
33	0h1821	PID controller integral time 2	PID I-Time 2	0.0–200.0 (sec)		10.0	O	p.164
34	0h1822	PID controller differential time 2	PID D-Time 2	0.00–1.00 (sec)		0.00	O	p.164
35	0h1823	PID output mode	PID Out Mode	0	PID Output	4 : PID or Main	O	p.164
				1	PID+ Main Freq			
				2	PID+EPID1 Out			
				3	PID+EPID1+ Main			
				4	PID or Main			
36	0h1824	PID output inverse	PID Out Inv	0	No	0: No	Δ	p.164
				1	Yes			
37	0h1825	PID output scale	PID Out Scale	0.1–1000.0 (%)		100.0	Δ	p.164
40	0h1828	PID multi-step reference setting 1	PID Step Ref 1	Unit Min–Unit Max		Unit Default	O	p.164
41	0h1829	PID multi-step	PID Step Ref 2	Unit Min–Unit Max		Unit Default	O	p.164

Code	Comm. Address	Name	LCD Display	Parameter Setting	Initial Value	Property*	Ref.
		reference setting 2					
42	0h182A	PID multi-step reference setting 3	PID Step Ref 3	Unit Min–Unit Max	Unit Default	O	p.164
43	0h182B	PID multi-step reference setting 4	PID Step Ref 4	Unit Min–Unit Max	Unit Default	O	p.164
44	0h182C	PID multi-step reference setting 5	PID Step Ref 5	Unit Min–Unit Max	Unit Default	O	p.164
45	0h182D	PID multi-step reference setting 6	PID Step Ref 6	Unit Min–Unit Max	Unit Default	O	p.164
46	0h182E	PID multi-step reference setting 7	PID Step Ref 7	Unit Min–Unit Max	Unit Default	O	p.164
50	0h1832	PID controller unit selection	PID Unit Sel	Refer to the Unit List 0 CUST 1 % 2 PSI 3 ˚F 4 ˚C 5 inWC 6 inM 7 mBar	1: %	O	p.164

Code	Comm. Address	Name	LCD Display	Parameter Setting		Initial Value	Property*	Ref.
				8	Bar			
				9	Pa			
				10	kPa			
				11	Hz			
				12	rpm			
				13	V			
				14	A			
				15	kW			
				16	HP			
				17	mpm			
				18	ft			
				19	m/s			
				20	m3/s			
				21	m3/m			
				22	m 3/h			
				23	l/s			
				24	l/m			
				25	l/h			
				26	kg/s			
				27	kg/m			
				28	kg/h			
				29	gl/s			
				30	gl/m			
				31	gl/h			
				32	ft/s			
				33	f3/s			
				34	f3/m			

Code	Comm. Address	Name	LCD Display	Parameter Setting		Initial Value	Property*	Ref.
				35	f3/h			
				36	lb/s			
				37	lb/m			
				38	lb/h			
				39	ppm			
				40	pps			
51	0h1833	PID unit scale	PID Unit Scale	0	x100	2: x 1	O	p.164
				1	x10			
				2	x1			
				3	x 0.1			
				4	x0.01			
52	0h1834	PID control 0% setting figure	PID Unit 0%	X100	-30000–Unit Max	Range varies depending on PID-50 setting	O	p.164
				X10	-3000.0–Unit Max			
				X1	-300.00–Unit Max			
				X0.1	-30.000–Unit Max			
				X0.01	-3.0000–Unit Max			
53	0h1835	PID control 100% setting figure	PID Unit 100%	X100	Unit Min –30000	Range differs depending on PID-50 setting	O	p.164
				X10	Unit Min –3000.0			
				X1	Unit Min –300.00			
				X0.1	Unit Min –30.000			
				X0.01	Unit Min –3.0000			

8.9 EPID Function Group (EPID)[51]

Data in the following table will be displayed only when the related code has been selected.

Unit MAX = EPID1 (EPID2) Unit 100%

Unit Min = (2xEPID1 (EPID2) Unit0%-EPID1 (EPID2) Unit100%)

Unit Default = (EPID1 (EPID2) Unit 100%-EPID1 (EPID2) Unit 0%)/2

***O/X : Write-enabled during operation,Δ: Writing available when operation stops**

Code	Comm. Address	Name	LCD Display	Setting Range		Initial Value	Property*	Ref.
00	-	Jump Code	Jump Code	1–99		1	O	p.70
01	0h1901	EPID 1 Mode Selection	EPID1 Mode	0	None	0: None	O	p.184
				1	Always ON			
				2	During Run			
				3	DI dependent			
02[52]	0h1902	EPID1output monitor value	EPID1 Output	-100.00–100.00%		0.00	X	p.184
03	0h1903	EPID1 standard monitor	EPID1 Ref Val	-		-	X	p.184
04	0h1904	EPID1 feedback monitor value	EPID1 Fdb Val	-		-	X	p.184
05	0h1905	EPID1error monitor value	EPID1 Err Val	-		-	X	p.184

[51] EPID Group is displayed when PID-02 code is set to 'Yes'.

[52] EPID-02–20 are displayed when EPID-01 code is not'0 (None).

Code	Comm. Address	Name	LCD Display	Setting Range		Initial Value	Property*	Ref.
06	0h1906	EPID1 command source selection	EPID1 Ref Src	0	Keypad	0: KeyPad	Δ	p.184
				1	V1			
				3	V2			
				4	I2			
				5	Int 485			
				6	FieldBus			
				8	Pulse			
				9[53]	V3			
				10	I3			
07	0h1907	EPID1 keypad command value	EPID1 Ref Set	Unit Min–Unit Max		Unit Min	O	p.184
08	0h1908	EPID1 feedback source selection	EPID1 FdbSrc	0	V1	0: V1	O	p.184
				2	V2			
				3	I2			
				4	Int485			
				5	FieldBus			
				7	Pulse			
				8[54]	V3			
				9	I3			
09	0h1909	EPID1 proportional gain	EPID1 P-Gain	0.00–300.00 (%)		50.00	O	p.184

[53] '9(V3)~10(I3)' of EPID-06 are available when Extension IO option is equipped. Refer to Extension IO option manual for more detailed information.

[54] '8(V3)~9(I3)' of EPID-08 are available when Extension IO option is equipped. Refer to Extension IO option manual for more detailed information.

Code	Comm. Address	Name	LCD Display	Setting Range		Initial Value	Property*	Ref.
10	0h190A	EPID1 integral time	EPID1 I-Time	0.0–200.0 (sec)		10.0	O	p.184
11	0h190B	EPID1 differentiation time	EPID1 D-Time	0.00–1.00 (sec)		0.00	O	p.184
12	0h190C	EPID1 feed-forward gain	EPID1 FF-Gain	0.0–1000.0 (%)		0.0	O	p.184
13	0h190D	EPID1 output filter	EPID1 Out LPF	0.00–10.00 (sec)		0.00	O	p.184
14	0h190E	EPID1 output upper limit	EPID1 Limit Hi	EPID1 Limit Lo–100.00		100.00	O	p.184
15	0h190F	EPID1 lower limit	EPID1 Limit Lo	-100.00–EPID1 Limit Hi		0.00	O	p.184
16	0h1910	EPID1 output inverse	EPID1 Out Inv	0	No	0: No	O	p.184
				1	Yes			
17	0h1911	EPID1 unit	EPID1 Unit Sel	Refer to the EPID Unit details table (p.184)		1: %	O	p.184
18	0h1912	EPID1 unit scale	EPID1 Unit Scl	0	X100	2: X1	O	p.184
				1	X10			
				2	X1			
				3	X0.1			
				4	X0.01			
19	0h1913	EPID1 unit 0% value	EPID1 Unit0%	X 100	-30000 –Unit Max	Values vary depending on the unit setting	O	p.184
				X10	-3000.0–Unit Max			

Code	Comm. Address	Name	LCD Display	Setting Range		Initial Value	Property*	Ref.
				X1	-300.00–Unit Max			
				X 0.1	-30.000–Unit Max			
				X 0.01	-3.0000–Unit Max			
20	0h1914	EPID1 unit 100% value	EPID1 Unit100%	X 100	Unit Min–30000	Values vary depending on the unit setting	O	p.184
				X10	Unit Min–3000.0			
				X1	Unit Min–300.00			
				X 0.1	Unit Min–30.000			
				X 0.01	Unit Min–3.0000			
31	0h191F	EPID2 Mode selection	EPID2 Mode	0	None	0: None	O	p.184
				1	Always ON			
				2	During Run			
				3	DI dependent			
32[55]	0h1920	EPID2 output monitor value	EPID2 Output	-100.00–100.00%		0.00	X	p.184
33	0h1921	EPID2 reference monitor value	EPID2 Ref Val	-		-	X	p.184

[55]EPID-32–50 are displayed when EPID-31 code is not'0 (None).

Code	Comm. Address	Name	LCD Display	Setting Range		Initial Value	Property*	Ref.
34	0h1922	EPID2 feedback monitor value	EPID2 Fdb Val	-		-	X	p.184
35	0h1923	EPID2 error monitor value	EPID2 Err Val	-		-	X	p.184
36	0h1924	EPID2 command source selection	EPID2 Ref Src	0	Keypad	0: Keypad	Δ	p.184
				1	V1			
				3	V2			
				4	I2			
				5	Int 485			
				6	FieldBus			
				8	Pulse			
				9[56]	V3			
				10	I3			
37	0h1925	EPID2 keypad command value	EPID2 Ref Set	Unit Min–Unit Max		Unit Min	O	p.184
38	0h1926	EPID2 feedback source selection	EPID2 FdbSrc	0	V1	0: V1	O	p.184
				2	V2			
				3	I2			
				4	Int 485			
				5	FieldBus			
				7	Pulse			

[56] '9(V3)~10(I3)' of EPID-36 are available when Extension IO option is equipped. Refer to Extension IO option manual for more detailed information.

Code	Comm. Address	Name	LCD Display	Setting Range		Initial Value	Property*	Ref.
				8[57]	V3			
				9	I3			
39	0h1927	EPID2 proportional gain	EPID2 P-Gain	0.00–300.00 (%)		50.0	O	p.184
40	0h1928	EPID2 integral time	EPID2 I-Time	0.0–200.0 (sec)		10.0	O	p.184
41	0h1929	EPID2 differentiation time	EPID2 D-Time	0.00–1.00 (sec)		0.00	O	p.184
42	0h192A	EPID2 feed-forward gain	EPID2 FF-Gain	0.0–1000.0 (%)		0.0	O	p.184
43	0h192B	EPID2 output filter	EPID2 Out LPF	0.00–10.00 (sec)		0.00	O	p.184
44	0h192C	EPID2 output upper limit	EPID2 Limit Hi	EPID2 Limit Lo–100.00		100.00	O	p.184
45	0h192D	EPID2 output lower limit	EPID2 Limit Lo	-100.00–EPID2 Limit Hi		0.00	O	p.184
46	0h192E	EPID2 output inverse	EPID2 Out Inv	0	No	0: No	O	p.184
				1	Yes			
47	0h192F	EPID2 unit	EPID2 Unit Sel	Refer to EPID Unit details table (p.184)		0: CUST	O	p.184
48	0h1930	EPID2 unit scale	EPID2 Unit Scl	0	X100	2: X1	O	p.184
				1	X10			

[57] '8(V3)~9(I3)' of EPID-38 are available when Extension IO option is equipped. Refer to Extension IO option manual for more detailed information.

				2	X1			
				3	X0.1			
				4	X0.01			
49	0h1931	EPID2 unit 0% value	EPID2 Unit0%	X 100	-30000–Unit Max	Values vary depending on the unit setting	O	p.184
				X10	-3000.0–Unit Max			
				X1	-300.00–Unit Max			
				X 0.1	-30.000–Unit Max			
				X 0.01	-3.0000–Unit Max			
50	0h1932	EPID2 unit 0% value	EPID2 Unit100%	X 100	Unit Min–30000	Values vary depending on the unit setting	O	p.184
				X10	Unit Min–3000.0			
				X1	Unit Min–300.00			
				X 0.1	Unit Min–30.000			
				X 0.01	Unit Min–3.0000			

www.nicsanat.com
021-87700210
NIC SANAT
نیک صنعت

8.10 Application 1 Function Group (AP1)

Data in the following table will be displayed only when the related code has been selected.

Unit MAX = PID Unit 100%

Unit Min = (2xPID Unit 0%-PID Unit 100%)

Unit Default = (PID Unit 100%-PID Unit 0%)/2

Unit Band = Unit 100%-Unit 0%

www.nicsanat.com
021-87700210
NIC SANAT
نیک صنعت

***O/X: Write-enabled during operation, Δ: Writing available when operation stops**

00	-	Jump Code	Jump Code	1–99	20	O	p.70
05	0h1A05	Sleep boost amount	Sleep Bst Set	0.00–Unit Max	0.00	O	p.180
06	0h1A06	Sleep boost speed	Sleep BstFreq	0.00, Low Freq–High Freq	60.00	O	p.180
07	0h1A07	PID sleep mode 1 delay time	PID Sleep 1 DT	0.0–6000.0 (sec)	20.0	O	p.180
08	0h1A08	PID sleep mode 1 frequency	PID Sleep1Freq	0.00, Low Freq–High Freq	0.00	O	p.180
09	0h1A09	PID wakeup 1 delay time	PID WakeUp1 DT	0.0–6000.0 (sec)	20.0	O	p.180
10	0h1A0A	PID wakeup 1 value	PID WakeUp1 Dev	0.00–Unit Band	20.00	O	p.180
11	0h1A0B	PID sleep mode 2 delay time	PID Sleep 2 DT	0.0–6000.0 (sec)	20.0	O	p.180
12	0h1A0C	PID sleep mode 2 frequency	PID Sleep2Freq	0.00, Low Freq–High Freq	0.00	O	p.180

Code	Comm. Address	Name	LCD Display	Setting Range		Initial Value	Property*	Ref.
13	0h1A0D	PID wakeup 2 delay time	PID WakeUp2 DT	0.0–6000.0 (sec)		20.0	O	p.180
14	0h1A0E	PID wakeup 2 value	PID WakeUp2 Dev	0.00–Unit Band		20.00	O	p.180
20	0h1A14	Soft Fill function options	Soft Fill Sel	0	No	0: No	O	p.179
				1	Yes			
21	0h1A15	Pre- PID operation frequency	Pre-PID Freq	Low Freq– High Freq		30.00	O	p.179
22	0h1A16	Pre- PID delay time	Pre-PID Delay	0.0–600.0 (sec)		60.0	O	p.179
23	0h1A17	Soft Fill escape value	Soft Fill Set	Unit Min–Unit Max		20.00	O	p.179
24	0h1A18	Soft Fill reference increasing value	Fill Step Set	0.00–Unit Band		2.00	O	p.179
25	0h1A19	Soft Fill reference increasing cycle	Fill Step Time	0–9999 (sec)		20	O	p.179
26	0h1A1A	Soft Fill changing amount	Fill Fdb Diff	0.00–Unit Band		0.00	O	p.179
30	0h1A1E	Flow Comp function options	Flow Comp Sel	0	No	0: No	O	p.194
				1	Yes			
31	0h1A1F	Max Comp amount	Max Comp Value	0.00–Unit Band		0.00	O	p.194
	0h1A28	MMC option selection	MMC Sel	0	None	0: None	Δ	p.266
				1	Single Ctrl			
				2	Multi			

40[58]					Follower			
				3	Multi Master			
				4	Serve Drv			
41[59]	0h1A29	Bypass selection	Regul Bypass	0	No	0: No	Δ	p.38
				1	Yes			
42	0h1A2A	Number of auxiliary motors	Num of Aux	1–5		5	Δ	p.266
43	0h1A2B	Select starting auxiliary motor	Starting Aux	1–5		1	Δ	p.266
44	0h1A2C	Display the number of running auxiliary motors	Aux Motor Run	-		-	X	p.266
45	0h1A2D	Display auxiliary motors 1– 4 priority	Aux Priority 1	-		-	X	p.266
46	0h1A2E	Display auxiliary motors 5– 8 priority	Aux Priority 2	-		-	X	p.266
48	0h1A30	Auxiliary motor options for inverter stop	Aux All Stop	0	No	1: Yes	O	p.266
				1	Yes			
49	0h1A31	Auxiliary motor stop order.	Aux On/Off Seq	0	FILO	0: FILO	Δ	p.266
				1	FIFO			
				2	Op time Order			

www.nicsanat.com
021-87700210
NIC SANAT
نیک صنعت

[58] Set PID-1 to 'YES' to configure AP1-40.

[59] Set AP1-40 to 'YES' to configure AP1-41.

Code	Comm. Address	Name	LCD Display	Setting Range	Initial Value	Property*	Ref.
50	0h1A32	Auxiliary motors pressure difference	Aux Start Diff	0–100 (%)	2	O	p.266
51	0h1A33	Main motor acceleration time when the number of auxiliary motors is reduced	Aux Acc Time	0.0–600.0 (sec)	2.0	O	p.266
52	0h1A34	Main motor acceleration time when the number of auxiliary motors is increased	Aux Dec Time	0.0–600.0 (sec)	2.0	O	p.266
53	0h1A35	Auxiliary motors start delay time	Aux Start DT	0.0–3600.0 (sec)	60.0	O	p.266
54	0h1A36	Auxiliary motors stop delay time	Aux Stop DT	0.0–3600.0 (sec)	60.0	O	p.266
55	0h1A37	Auto change mode selection	Auto Ch Mode	0 None 1 AUX Exchange 2 Main Exchange	1: AUX Exchange	Δ	p.266
56	0h1A38	Auto change time	Auto Ch Time	00: 00–99: 00	72: 00	O	p.266
57	0h1A39	Auto change frequency	Auto Ch Level	Low Freq–High Freq	20.00	O	p.266
58	0h1A3A	Auto change operation time	Auto Op Time	-	-	X	p.266
59	0h1A3B	Auxiliary motor pressure difference	Aux Stop Diff	0~100	2		

Code	Comm. Address	Name	LCD Display	Setting Range	Initial Value	Property*	Ref.
60[60]	0h1A3C	Target frequency of Aux motor during Multi Master	Follower Freq	Low Freq ~ High Freq	60.00		
61	0h1A3D	#1 auxiliary motor start frequency	Start Freq 1	Freq Low Limit–Freq High limit (Hz)	45.00	O	p.266
62	0h1A3E	#2 auxiliary motor start frequency	Start Freq 2	Low Freq–High Freq	45.00	O	p.266
63	0h1A3F	#3 auxiliary motor start frequency	Start Freq 3	Low Freq–High Freq	45.00	O	p.266
64	0h1A40	#4 auxiliary motor start frequency	Start Freq 4	Low Freq–High Freq	45.00	O	p.266
65	0h1A41	#5 auxiliary motor start frequency	Start Freq 5	Low Freq–High Freq	45.00	O	p.266
70	0h1A46	#1 auxiliary motor stop frequency	Stop Freq 1	Low Freq–High Freq	20.00	O	p.266
71	0h1A47	#2 auxiliary motor stop frequency	Stop Freq 2	Low Freq–High Freq	20.00	O	p.266
72	0h1A48	#3 auxiliary motor stop frequency	Stop Freq 3	Low Freq–High Freq	20.00	O	p.266
73	0h1A49	#4 auxiliary motor stop frequency	Stop Freq 4	Low Freq–High Freq	20.00	O	p.266

[60] API-60 only appears when AP1-40 MMC Sel is set to '2' or '3'.

Code	Comm. Address	Name	LCD Display	Setting Range	Initial Value	Property*	Ref.
74	0h1A4A	#5 auxiliary motor stop frequency	Stop Freq 5	Low Freq–High Freq	20.00	O	p.266
80	0h1A50	#1 auxiliary motor's reference compensation	Aux1 Ref Comp	0.00–Unit Band	0.00	O	p.266
81	0h1A51	#2 auxiliary motor reference compensation	Aux2 Ref Comp	0.00–Unit Band	0.00	O	p.266
82	0h1A52	#3 auxiliary motor reference compensation	Aux3 Ref Comp	0.00–Unit Band	0.00	O	p.266
83	0h1A53	#4 auxiliary motor reference compensation	Aux4 Ref Comp	0.00–Unit Band	0.00	O	p.266
84	0h1A54	#5 auxiliary motor reference compensation	Aux5 Ref Comp	0.00–Unit Band	0.00	O	p.266
90	0h1A5A	Interlock selection	Interlock	0 NO 1 YES	0: No	O	p.286
91	0h1A5B	Delay time before next motor operates when an interlock or an auto change on the main motor occurs.	Interlock DT	0.1–360.0 (Sec)	5.0	O	p.286
	0h1A5F	Selection of Auxiliary motor	AuxRunTime Sel	0 Aux 1 1 Aux 2	0: Aux1	O	

Code	Comm. Address	Name	LCD Display	Setting Range		Initial Value	Property*	Ref.
95[61]		to display [AP1-96] [AP1-97]		2	Aux 3			
				3	Aux 4			
				4	Aux 5			
96	0h1A60	Operation time(Day) of Auxiliary motor selected in [AP1-95]	AuxRunTime Day	0 – 65535		0	O	
97	0h1A61	Operation time of Auxiliary motor selected in [AP1-95] (Hour:Minute)	AuxRunTime Min	00:00 - 23:59		00:00	O	
98	0h1A62	Deleting operation time of Auxiliary motor	AuxRunTime Clr	0	None	0: None	O	
				1	All			
				2	Aux 1			
				3	Aux 2			
				4	Aux 3			
				5	Aux 4			
				6	Aux 5			

8.11 Application 2 Function Group (AP2)

[61] AP1-95~98 is available when MMC and Master Follower functions are performed.

Data In the following table will be displayed only when the related code has been selected.

***O/X: Write-enabled during operation, Δ: Writing available when operation stops**

Code	Comm. Address	Name	LCD Display	Setting Range		Initial Value	Property*	Ref.
00	-	Jump Code	Jump Code	1–99		40	O	p.70
01[62]	0h1B01	Load curve Tuning	Load Tune	0	No	No	Δ	p.207
				1	Yes			
02	0h1B02	Low Freq load curve	Load Fit Lfreq	Base Freq*15%–Load Fit HFreq		30.00	Δ	p.207
03	0h1B03	Low Freq current	Load Fit LCurr	0.0–80.0 (%)		40.0	Δ	p.207
04	0h1B04	Low Freq power total	Load Fit LPwr	0.0–80.0 (%)		30.0	Δ	p.207
08	0h1B08	High Freq load curve	Load Fit Hfreq	Load Fit LFreq–HighFreq		51.00	Δ	p.207
09	0h1B09	High Freq current.	Load Fit HCurr	Load Fit LCurr – 200.0 (%)		80.0	Δ	p.207
10	0h1B0A	High Freq total power	Load Fit HPwr	Load Fit LPwr – 200.0 (%)		80.0	Δ	p.207
11	0h1B0B	Current load curve	Load Curve Cur	-		-	X	p.207
12	0h1B0C	Power load curve	Load Curve Pwr	-		-	X	p.207
15	0h1B0F	Pump clean setting1	Pump Clean	0	None	0: None	O	p.200
				1	DI			

[62] Set the operation mode to AUTO to configure AP2-01.

Code	Comm. Address	Name	LCD Display	Setting Range		Initial Value	Property*	Ref.
			Mode1		Dependent			
				2	Output Power			
				3	Output Current			
16	0h1B10	Pump clean setting2	Pump Clean Mode2	0	None	0: None	Δ	p.200
				1	Start			
				2	Stop			
				3	Start and Stop			
17	0h1B11	Pump clean load setting	PC Curve Rate	0.1–200.0 (%)		100.0	O	p.200
18	0h1B12	Pump clean reference band	PC Curve Band	0.0–100.0 (%)		5.0	O	p.200
19	0h1B13	Pump clean operation delay time	PC Curve DT	0.0–6000.0 (sec)		60.0	O	p.200
20	0h1B14	Pump clean start delay time	PC Start DT	0.0–6000.0 (sec)		10.0	O	p.200
21	0h1B15	0 speed operating time at Fx/Rx switching	PC Step DT	0.1–6000.0 (sec)		5.0	O	p.200
22	0h1B16	Pump clean Acc time	PC Acc Time	0.0–600.0 (sec)		10.0	O	p.200
23	0h1B17	Pump clean Dec time	PC Dec Time	0.0–600.0 (sec)		10.0	O	p.200
24	0h1B18	Forward step maintaining time	FwdSteady Time	0.0–600.0 (sec)		10.0	O	p.200
25	0h1B19	Forward	FwdSteady	0.00, Low Freq–		30.00	O	p.200

Code	Comm. Address	Name	LCD Display	Setting Range	Initial Value	Property*	Ref.
		step maintaining frequency	Freq	High Freq			
26	0h1B1A	Reverse step running time	Rev SteadyTime	0.0–600.0 (sec)	10.0	O	p.200
27	0h1B1B	Reverse step running frequency	Rev SteadyFreq	0.00, Low Freq–High Freq	30.00	O	p.200
28	0h1B1C	Pump clean number of Fx/Rx steps	PC Num of Steps	1–10	2	O	p.200
29	0h1B1D	Pump clean function cycle monitoring	Repeat Num Mon	-	-	X	p.200
30	0h1B1E	Number of pump clean repetitions	Repeat Num Set	0–10	2	O	p.200
31	0h1B1F	Operation after pump clean end	PC End Mode	0 Stop 1 Run	0:Stop	Δ	p.200
32	0h1B20	Pump clean continuous limit time	PC Limit Time	6–60 (min)	10	O	p.200
33	0h1B21	Pump clean continuous limit numbers	PC Limit Num	0–10	3	O	p.200
38	0h1B26	Dec Valve operation frequency	Dec Valve Freq	Low Freq–High Freq	40.00	O	p.206
39	0h1B27	Dev Valve Dec time	Dev Valve Time	0.0–6000.0 (sec)	0.0	O	p.206
40	0h1B28	Start and	Start&End	0 No	0: No	Δ	p.204

Code	Comm. Address	Name	LCD Display	Setting Range	Initial Value	Property*	Ref.
		End ramp settings	Ramp	1 Yes			
41	0h1B29	Start Ramp Acc time	Start Ramp Acc	0.0–600.0 (sec)	10.0	O	p.204
42	0h1B2A	End Ramp Dec time	End Ramp Dec	0.0–600.0 (sec)	10.0	O	p.204
45	0h1B2D	Damper check time	Damper DT	0.0 – 600.0 (sec)	5.0	O	p.194
46	0h1B2E	Lubrication operation time	Lub Op Time	0.0–600.0 (sec)	5.0	O	p.196
48[63]	0h1B30	Pre heat level	Pre Heat Level	1–100 (%)	20	O	p.216
49	0h1B31	Pre-heat duty	Pre-Heat Duty	1–100 (%)	30	O	p.216
50	0h1B32	DC input delay time	DC Inj Delay T	0.0–600.0 (sec)	60.0	O	p.216
87	0h1B57	#1 Motor average power	M1 AVG PWR	0.1–500.0 (kW)	-	O	p.198
88	0h1B58	#2 Motor average power	M2 AVG PWR	0.1–500.0 (kW)	-	O	p.198
89	0h1B59	Cost per kWh	Cost per kWh	0.0–1000.0	0.0	O	p.198
90	0h1B5A	Saved kWh	Saved kWh	-	0.0	X	p.198
91	0h1B5B	Saved MWh	Saved MWh	-	0	X	p.198
92	0h1B5C	Saved Cost below 1000 unit	Saved Cost1	-	0.0	X	p.198

[63] AP2-48–49 are displayed when IN-65–71is set to 'Pre-Heat.

93	0h1B5D	Saved Cost over 1000 unit	Saved Cost2	-	0	X	p.198
94	0h1B5E	Saved CO2 conversion Factor	CO2 Factor	0.0–5.0	0.0	O	p.198
95	0h1B5F	Saved CO2 (Ton)	Saved CO2 – 1	-	0.0	X	p.198
96	0h1B60	Saved CO2 (kTon)	Saved CO2 – 2	-	0	X	p.198
97	0h1B61	Saved energy reset	Reset Energy	0 No 1 Yes	0.No	Δ	p.198

www.nicsanat.com
021-87700210
NIC SANAT
نیک صنعت

8.12 Application 3 Function Group (AP3)

Data In the following table will be displayed only when the related code has been selected.

***O/X: Write-enabled during operation, Δ: Writing available when operation stops**

Code	Comm. Address	Name	LCD Display	Setting Range	Initial Value	Property*	Ref.
00	-	Jump code	Jump Code	1–99	70	O	p.70
01	0h1C01	Current date	Now Date	01/01/2000 ~ 12/31/2099 (Date)	01/01/2000	O	p.222
02	0h1C02	Current time	Now Time	0: 00–23: 59 (min)	0: 00	O	p.222
03	0h1C03	Current day	Now Weekday	0000000–1111111 (Bit)	0000001	O	p.222
04	0h1C04	Summer Time Start date	Summer T Start	01/01 ~ Summer T Stop	04/01	O	p.222
05	0h1C05	Summer Time Finish date	Summer T Stop	Summer T Start ~12/31(Date)	11/31	O	p.222
06[64]	0h1C06	Date display format	Date Format	0 YYYY/MM/DD 1 MM/DD/YYYY 2 DD/MM/YYYY	Date Format	O	p.222
10	0h1C0A	Period connection status	Period Status	-	-	X	p.222
11	0h1C0B	Time Period1 Start time configuration	Period1 Start T	0: 00–24: 00 (min)	24: 00	O	p.222
12	0h1C0C	Time Period1 End time configuration	Period1 Stop T	Period1 Start T – 24: 00 (min)	24: 00	O	p.222

[64] The date format can be changed according to the AP3-06 settings.

Code	Comm. Address	Name	LCD Display	Setting Range	Initial Value	Property*	Ref.
13	0h1C0D	Time Period1 Day of the week configuration	Period1 Day	0000000–1111111 (Bit)	0000000		p.222
14	0h1C0E	Time Period2 Start time configuration	Period2 Start T	0: 00–24: 00 (min)	24: 00	O	p.222
15	0h1C0F	Time Period2 End time configuration	Period2 Stop T	Period2 Start T – 24: 00 (min)	24: 00	O	p.222
16	0h1C10	Time Period2 Day of the week configuration	Period2 Day	0000000–1111111 (Bit)	00000000	O	p.222
17	0h1C11	Time Period3 Start time configuration	Period3 Start T	0: 00–24: 00 (min)	24: 00	O	p.222
18	0h1C12	Time Period3 End time configuration	Period3 Stop T	Period3 Start T – 24: 00 (min)	24: 00	O	p.222
19	0h1C13	Time Period3 Day of the week configuration	Period3 Day	0000000–1111111 (Bit)	0000000	O	p.222
20	0h1C14	Time Period4 Start time configuration	Period4 Start T	0: 00–24: 00 (min)	24: 00	O	p.222
21	0h1C15	Time Period4 End time configuration	Period4 Stop T	Period4 Start T – 24: 00 (min)	24: 00	O	p.222
22	0h1C16	Time Period Day of the week configuration	Period4 Day	0000000–1111111 (Bit)	0000000	O	p.222

Code	Comm. Address	Name	LCD Display	Setting Range	Initial Value	Property*	Ref.
30	0h1C1E	Except1 Date Start time configuration	Except1 Start T	0: 00–24: 00 (min)	24: 00	O	p.222
31	0h1C1F	Except1 Date End time configuration	Except1 Stop T	Except1 StartT – 24: 00 (min)	24: 00	O	p.222
32	0h1C20	Except1 Date configuration	Except1Date	01/01–12/31 (Date)	01/01	O	p.222
33	0h1C21	Except2 Date Start time configuration	Except2 Start T	0: 00–24: 00 (min)	24: 00	O	p.222
34	0h1C22	Except2 Date Stop time configuration	Except2 Stop T	Except2 StartT – 24: 00 (min)	24: 00	O	p.222
35	0h1C23	Except2 Date configuration	Except2Date	01/01–12/31 (Date)	01/01	O	p.222
36	0h1C24	Except3 Date Start time configuration	Except3 Start T	0: 00–24: 00 (min)	24: 00	O	p.222
37	0h1C25	Except3 Date End time configuration	Except3 Stop T	Except3 StartT – 24: 00 (min)	24: 00	O	p.222
38	0h1C26	Except3 Date configuration	Except3Date	01/01–12/31 (Date)	01/01	O	p.222
39	0h1C27	Except4 Date Start time configuration	Except4 Start T	0: 00–24: 00 (min)	24: 00	O	p.222
40	0h1C28	Except4 Date End time configuration	Except4 Stop T	Except4 StartT – 24: 00 (min)	24: 00	O	p.222
41	0h1C29	Except4 Date configuration	Except4Date	01/01–12/31 (Date)	01/01	O	p.222
42	0h1C2A	Except5 Date	Except5	0: 00–24: 00 (min)	24: 00	O	p.222

Code	Comm. Address	Name	LCD Display	Setting Range	Initial Value	Property*	Ref.
		Start time configuration	Start T				
43	0h1C2B	Except5 Date End time configuration	Except5 Stop T	Except5 StartT – 24: 00 (min)	24: 00	O	p.222
44	0h1C2C	Except5 Date configuration	Except5 Date	01/01–12/31 (Date)	01/01	O	p.222
45	0h1C2D	Except6 Date Start time configuration	Except6 Start T	0: 00–24: 00 (min)	24: 00	O	p.222
46	0h1C2E	Except6 Date End time configuration	Except6 Stop T	Except6 StartT – 24: 00 (min)	24: 00	O	p.222
47	0h1C2F	Except6 Date configuration	Except6 Date	01/01–12/31 (Date)	01/01	O	p.222
48	0h1C30	Except7 Date Start time configuration	Except7 Start T	0: 00–24: 00 (min)	24: 00	O	p.222
49	0h1C31	Except7 Date End time configuration	Except7 Stop T	Except7 StartT – 24: 00 (min)	24: 00	O	p.222
50	0h1C32	Except7 Date configuration	Except7 Date	01/01–12/31 (Date)	01/01	O	p.222
51	0h1C33	Except8 Date Start time configuration	Except8 Start T	0: 00–24: 00 (min)	24: 00	O	p.222
52	0h1C34	Except8 Date End time configuration	Except8 Stop T	Except8 StartT – 24: 00 (min)	24: 00	O	p.222
53	0h1C35	Except8 Date configuration	Except8 Date	01/01–12/31 (Date)	01/01	O	p.222
70	0h1C46	Time Event	Time	0 No	0: NO	Δ	p.222

Code	Comm. Address	Name	LCD Display	Setting Range		Initial Value	Property*	Ref.
		function configuration	Event En	1	Yes			
71	0h1C47	Time Event configuration status	T-Event Status	-		-	X	p.222
72	0h1C48	Time Event 1 connection status	T-Event1 Period	000000000000 – 111111111111		000000000000	Δ	p.222
73	0h1C49	Time Event 1 functions	T-Event1 Define	0	None	0: None	Δ	p.222
				1	Fx			
				2	Rx			
				3	Speed-L			
				4	Speed-M			
				5	Speed-H			
				7	Xcel-L			
				8	Xcel-M			
				9	Xcel-H			
				10	Xcel Stop			
				11	Run Enable			
				12	2nd Source			
				13	Exchange			
				14	Analog Hold			
				15	I-Term Clear			
				16	PID Openloop			
				17	PID Gain 2			
				18	PID Ref Change			
				19	2nd Motor			

Code	Comm. Address	Name	LCD Display	Setting Range		Initial Value	Property*	Ref.
				20	Timer In			
				21	Dias Aux Ref			
				22	EPID1 Run			
				23	EPID1 ITermClr			
				24	Pre Heat			
				25	EPID2 Run			
				26	EPID2 ITermClr			
				27	Sleep Wake Chg			
				28	PID Step Ref I			
				29	PID Step Ref M			
				30	PID Step Ref H			
74	0h1C4A	Time Event 2 connection configuration	T-Event2 Period	000000000000 – 111111111111		000000000000	Δ	p.222
75	0h1C4B	Time Event 2 functions	T-Event2 Define	Identical to the setting range for AP3-73		0: None	Δ	p.222
76	0h1C4C	Time Event 3 connection configuration	T-Event2 Period	000000000000 – 111111111111		000000000000	Δ	p.222
77	0h1C4D	Time Event 3 functions	T-Event3 Define	Identical to the setting range for AP3-73		0: None	Δ	p.222
78	0h1C4E	Time Event 4 connection configuration	T-Event4 Period	000000000000 – 111111111111		000000000000	Δ	p.222

79	0h1C4F	Time Event 4 functions	T-Event4 Define	Identical to the setting range for AP3-73	0: None	Δ	p.222
80	0h1C50	Time Event 5 connection configuration	T-Event5 Period	000000000000 – 111111111111	000000000000	Δ	p.222
81	0h1C51	Time Event 5 functions	T-Event5 Define	Identical to the setting range for AP3-73	0: None	Δ	p.222
82	0h1C52	Time Event 6 connection configuration	T-Event6 Period	000000000000 – 111111111111	000000000000	Δ	p.222
83	0h1C53	Time Event 6 functions	T-Event6 Define	Identical to the setting range for AP3-73	0: None	Δ	p.222
84	0h1C54	Time Event 7 connection configuration	T-Event7 Period	000000000000 – 111111111111	000000000000	Δ	p.222
85	0h1C55	Time Event 7 functions	T-Event7 Define	Same setting range for AP3-73	0: None	Δ	p.222
86	0h1C56	Time Event 8 connection configuration	T-Event8 Period	000000000000 – 111111111111	000000000000	Δ	p.222
87	0h1C57	Time Event 8 functions	T-Event8 Define	Same setting range as AP3-73	0: None	Δ	p.222

www.nicsanat.com
021-87700210
NIC SANAT
نیک صنعت

8.13 Protection Function Group (PRT)

Data In the following table will be displayed only when the related code has been selected.

O : Write-enabled during operation, Δ: Write-enabled when stopped, X: Write disabled

Code	Comm. Address	Name	LCD Display	Setting Range		Initial Value		Property*	Ref.
00	-	Jump Code	Jump Code	1–99		40		O	p.70
05	0h1D05	Input/output open-phase protection	Phase Loss Chk	Bit	00–11	00		Δ	p.331
				Bit 0	Output open phase				
				Bit 1	Input open phase				
06	0h1D06	Input voltage range during open-phase	IPO V Band	1–100 (V)		15		O	p.331
07	0h1D07	Deceleration time at fault trip	Trip Dec Time	0.0–600.0 (sec)		3.0	0.75~ 90kW	O	-
						90.0	110~ 500kW		
08	0h1D08	Selection of startup on trip reset	RST Restart	Bit	00–11	00		O	p.248
				Bit 0	Fault trips other than LV trip				
				Bit 1	LV Trip				
09	0h1D09	Number of automatic restarts	Retry Number	0–10		0		O	p.248
10	0h1D0A	Automatic restart delay time	Retry Delay	0.1–600.0 (sec)		5.0		O	p.248
11	0h1D0B	Keypad command loss	Lost KPD Mode	0	None			O	p.334
				1	Warning				

Code	Comm. Address	Name	LCD Display	Setting Range		Initial Value	Property*	Ref.
		operation mode		2	Free-Run	0: None		
				3	Dec			
12	0h1D0C	Speed command loss operation mode	Lost Cmd Mode	0	None	0: None	O	p.334
				1	Free-Run			
				2	Dec			
				3	Hold Input			
				4	Hold Output			
				5	Lost Preset			
13[65]	0h1D0D	Time to determine speed command loss	Lost Cmd Time	0.1–120.0 (sec)		1.0	O	p.334
14	0h1D0E	Operation frequency at speed command loss	Lost Preset F	0.00, Low Freq–High Freq		0.00	O	p.334
15	0h1D0F	Analog input loss decision level	AI Lost Level	0	Half of x1	0: Half of x1	O	p.334
				1	Below x1			
17	0h1D11	Overload warning selection	OL Warn Select	0	No	0: No	O	p.323
				1	Yes			
18	0h1D12	Overload warning level	OL Warn Level	30–OL Trip Level(%)		110	O	p.323
19	0h1D13	Overload warning time	OL Warn Time	0.0–30.0 (sec)		10.0	O	p.323
20	0h1D14	Motion at overload trip	OL Trip Select	0	None	1: Free-Run	O	p.323
				1	Free-Run			
				2	Dec			

[65]PRT-13–15 are displayed when PRT-12 is not set to'0 (NONE).

Code	Comm. Address	Name	LCD Display	Setting Range		Initial Value	Property*	Ref.
21	0h1D15	Overload trip level	OL Trip Level	30–150 (%)		120	O	p.323
22	0h1D16	Overload trip time	OL Trip Time	0.0–60.0 (sec)		60.0	O	p.323
23	0h1D17	Under load detection Source	UL Source	0	Output Current	0: Output Current	Δ	p.340
				1	Output Power			
24	0h1D18	Under load detection band	UL Band	0.0–100.0 (%)		10.0	Δ	p.340
25	0h1D19	Under load warning selection	UL Warn Sel	0	No	0: No	O	p.340
				1	Yes			
26	0h1D1A	Under load warning time	UL Warn Time	0.0–600.0 (sec)		10.0	O	p.340
27	0h1D1B	Under load trip selection	UL Trip Sel	0	None	0: None	O	p.340
				1	Free-Run			
				2	Dec			
28	0h1D1C	Under load trip timer	UL Trip Time	0.0–600.0 (sec)		30.0	O	p.340
31	0h1D1F	Operation on no motor trip	No Motor Trip	0	None	0: None	O	p.345
				1	Free-Run			
32	0h1D20	No motor trip current level	No Motor Level	1–100 (%)		5	O	p.345
33	0h1D21	No motor detection time	No Motor Time	0.1–10.0 (sec)		3.0	O	p.345
34	0h1D22	Operation at motor overheat detection	Thermal-T Sel	0	None	0: None	O	p.323
				1	Free-Run			
				2	Dec			

Code	Comm. Address	Name	LCD Display	Setting Range		Initial Value	Property*	Ref.
35	0h1D23	Thermal sensor input	Thermal In Src	0	Thermal In	0: Thermal In	O	p.323
				1	V2			
36	0h1D24	Thermal sensor fault level	Thermal-T Lev	0.0–100.0 (%)		50.0	O	p.323
37	0h1D25	Thermal sensor fault range	Thermal-T	0	Low	0: Low	O	p.323
				1	High			
38[66]	0h1D26	Motor overheat detection sensor	Thermal Monitor	-		-	X	p.323
40	0h1D28	Electronic thermal prevention fault trip selection	ETH Trip Sel	0	None	0: None	O	p.321
				1	Free-Run			
				2	Dec			
41	0h1D29	Motor cooling fan type	Motor Cooling	0	Self-cool	0: Self-cool	O	p.321
				1	Forced-cool			
42	0h1D2A	Electronic thermal one minute rating	ETH 1 min	ETH Cont–150 (%)		120	O	p.321
43	0h1D2B	Electronic thermal prevention continuous rating	ETH Cont	50–120 (%)		100	O	p.321
44	0h1D2C	Fire mode password	Fire Mode PW	0~9999		3473	O	p.240
				0	None			

[66]PRT-38 is displayed when PRT-34 is not set to '0 (NONE).

Code	Comm. Address	Name	LCD Display	Setting Range		Initial Value	Property*	Ref.
45[67]	0h1D2D	Fire mode setting	Fire Mode Sel	1	Fire Mode	0: None	O	p.334
				2	Test Mode			
46[68]	0h1D2E	Fire mode direction setting	Fire Mode Dir	0	Reverse	1: Forward	O	p.334
				1	Forward			
47[69]	0h1D2F	Fire mode frequency setting	Fire Mode Freq	0.00–max Freq		60.00	O	p.334
48	0h1D30	Number of fire mode operations	Fire Mode Cnt	-		0	X	p.334
50	0h1D32	Stall prevention and flux braking	Stall Prevent	bit	0000–1111	0100	Δ	p.327
				Bit 0	At acceleration			
				Bit 1	At constant speed			
				Bit 2	At deceleration			
				Bit 3	Flux braking			
51	0h1D33	Stall frequency 1	Stall Freq 1	Start frequency-Stall frequency2 (Hz)		60.00	O	p.327
52	0h1D34	Stall level 1	Stall Level 1	30-150 (%)		130	Δ	p.327

[67] PRT-45 can only be set when PRT-44 is in Fire mode. To change the mode in PRT-44, create a new password for PRT-44.

[68] PRT-46–47 are displayed when PRT-45 is not set to '0 (NONE).

[69] When Fire mode is set at PRT-45, PRT-46 is automatically set to forward, and the frequency set at PRT-47 cannot be edited. When PRT-45 is set to Test mode, PRT-46 and PRT-47 settings are editable.

Code	Comm. Address	Name	LCD Display	Setting Range	Initial Value	Property*	Ref.
53	0h1D35	Stall frequency 2	Stall Freq 2	Stall frequency1-Stall frequency3 (Hz)	60.00	O	p.327
54	0h1D36	Stall level 2	Stall Level 2	30-150 (%)	130	Δ	p.327
55	0h1D37	Stall frequency 3	Stall Freq 3	Stall frequency2-Stall frequency 4 (Hz)	60.00	O	p.327
56	0h1D38	Stall level 3	Stall Level 3	30–150 (%)	130	Δ	p.327
57	0h1D39	Stall frequency 4	Stall Freq 4	Stall frequency3-Maximum frequency (Hz)	60.00	O	p.327
58	0h1D3A	Stall level 4	Stall Level 4	30–150 (%)	130	Δ	p.327
59	0h1D3B	Flux braking gain	Flux Brake Kp	0.75-90kW: 0–150 (%) 110-500kW: 0–10 (%)	0	O	
60	0h1D3C	Pipe break detection setting	PipeBrokenSel	0: None 1: Warning 2: Free-Run 3: Dec	0: None	O	p.213
61	0h1D3D	Pipe break detection variation	PipeBroken Lev	0.0–100.0 (%)	97.5	O	p.213
62	0h1D3E	Pipe break detection time	PipeBroken DT	0.0–6000.0 (Sec)	10.0	O	p.213
66	0h1D42	Braking resistor configuration	DB Warn %ED	0–30 (%)	0	O	p.338
				0: None			

Code	Comm. Address	Name	LCD Display	Setting Range		Initial Value	Property*	Ref.
70	0h1D46	Level detect mode selection	LDT Sel	1	Warning	0: None	O	p.209
				2	Free-Run			
				3	Dec			
71	0h1D47	Level detect range setting	LDT Area Sel	0	Below Level	0: Below Level	O	p.209
				1	Above Level			
72	0h1D48	Level detect source	LDT Source	0	Output Current	0: Output Current	O	p.209
				1	DC Link Voltage			
				2	Output			
				3	kW			
				4	HP			
				5	V1			
				6	V2			
				7	I2			
				8	PID Ref			
				9	PID Fdb			
				10	PID Output			
				11	EPID1 Fdb			
				12	EPID2 Fdb Val			
73	0h1D49	Level detect delay time	LDT DlyTime	0–9999 (sec)		2	O	p.209
74	0h1D4A	Level detect standard set value	LDT Level	Source setting		Source setting	O	p.209

Code	Comm. Address	Name	LCD Display	Setting Range		Initial Value	Property*	Ref.
75	0h1D4B	Level detect band width	LDT Band width	Source setting		Source setting	O	p.209
76	0h1D4C	Level detect frequency	LDT Freq	0.00–High Freq (Hz)		20.00	O	p.209
77	0h1D4D	Level detect trip restart time	LDT Restart DT	0.0–3000.0 (Min)		60.0	O	p.209
79	0h1D4F	Cooling fan fault selection	Fan Trip Mode	0	Trip	0: Trip	O	p.341
				1	Warning			
80	0h1D50	Operation mode on optional card trip	Opt Trip Mode	0	None	1: Free-Run	O	p.344
				1	Free-Run			
				2	Dec			
81	0h1D51	Low voltage trip decision delay time	LVT Delay	0.0–60.0 (sec)		0.0	Δ	p.342
82	0h1D52	Low voltage trip decision during operation	LV2 Trip Sel	0	No	0: No	Δ	p.342
				1	Yes			
83	0h1D53	Remaining capacitor life diagnosis level	CAP.Diag Perc	10–100 (%)		0	O	p.346
84[70]	-	Capacitor life diagnosis mode	CAP. Diag	0	None	0: None	Δ	p.346
				1	Cap.Diag 1			
				2	Cap.Diag 2			
				3	Cap.Init			

[70] PRT-84 is displayed when PRT-83 is set to more than '0(%). PRT- 84 can only be set in Auto-State.

Code	Comm. Address	Name	LCD Display	Setting Range		Initial Value	Property*	Ref.
85	0h1D55	Capacitor life diagnosis level 1	CAP. Level1	50.0–95.0 (%)		0.0	Δ	p.346
86[71]	0h1D56	Capacitor life diagnosis level 2	CAP. Level2	-		0.0	X	p.346
87	0h1D57	Fan accumulated operating time operation %	Fan Time Perc	-		0	X	p.348
88	0h1D58	Fan replacement alarm level	Fan Exchange	0.0–100.0 (%)		0.0	O	p.348
90	0h1D5A	Low battery voltage setting	Low Battery	0	None	0:None	O	p.339
				1	Warning			
91	0h1D5B	Setting the function of Broken belt	BrokenBelt Sel	0	None	0:None	Δ	
				1	Warning			
				2	Free-Run			
92	0h1D5C	Operating the frequency of Broken belt	BrokenBelt Freq	15.00~MzxFreq		15.00	Δ	
93	0h1D5D	Motor torque current	Current Trq	-		-	X	
94	0h1D5E	Torque current of operating Broken belt	BrokenBelt Trq	0.0~100.0%		10.0	Δ	
95	0 h1D5F	Delay of operating Broken belt	BrokenBelt Dly	0~600.0[sec]		10.0	Δ	

[71] PRT-86 is read only.

96	0h1D60	LDT Auto restart count	LDT Rst Cnt	0~6000	1	Δ	**P205**
97	0h1D61	LDT Auto restart cycle count	LDT Rst Cnt M	0~6000	0	X	**P205**
98	0h1D62	LDT Auto restart cycle Initialization	LDT Cnt Clr T	0~5000	60	Δ	**P205**

www.nicsanat.com
021-87700210
NIC SANAT
نیک صنعت

8.14 2nd Motor Function Group (M2)

The second motor function group is displayed when one or more of the IN-65–71 codes is set to '28 (2nd MOTOR)'. Data in the following table will be displayed only when the related code has been selected.

***O: Write-enabled during operation, Δ: Write-enabled when stopped, X: Write disabled**

Code	Comm. Address	Name	LCD Display	Setting Range		Initial Value		Property*	Ref.
00	-	Jump code	Jump Code	1–99		14		O	p.70
04	0h1E04	Acceleration time	M2-Acc Time	0.0–600.0 (sec)		20.0	0.75~ 90kW	O	p.251
						60.0	110~ 250kW		
						100.0	315~ 500kW		
05	0h1E05	Deceleration time	M2-Dec Time	0.0–600.0 (sec)		30.0	0.75~ 90kW	O	p.251
						90.0	110~ 250kW		
						150.0	315~ 500kW		
06	0h1E06	Motor capacity	M2-Capacity	0	0.2 kW (0.3HP)	-		Δ	p.251
				1	0.4 kW (0.5HP)				
				2	0.75 kW (1.0HP)				
				3	1.1 kW (1.5HP)				
				4	1.5 kW (2.0HP)				

Code	Comm. Address	Name	LCD Display	Setting Range		Initial Value	Property*	Ref.
				5	2.2 kW (3.0HP)			
				6	3.0 kW (4.0HP)			
				7	3.7 kW (5.0HP)			
				8	4.0 kW (5.5HP)			
				9	5.5 kW (7.5HP)			
				10	7.5 Kw (10.0HP)			
				11	11.0 kW (15.0HP)			
				12	15.0 kW (20.0HP)			
				13	18.5 kW (25.0HP)			
				14	22.0 kW (30.0HP)			
				15	30.0 kW (40.0HP)			
				16	37.0 kW (50.0HP)			
				17	45.0 kW (60.0HP)			
				18	55.0 kW (75.0HP)			

Code	Comm. Address	Name	LCD Display	Setting Range		Initial Value	Property*	Ref.
				19	75.0kW (100.0HP)			
				20	90.0kW (125.0HP)			
				21	110.0kW (150.0HP)			
				22	132.0kW (200.0HP)			
				23	160.0kW (250.0HP)			
				24	185.0kW (300.0HP)			
				25	220.0kW (350.0HP)			
				26	250.0kW (400.0HP)			
				27	315.0kW (500.0HP)			
				28	355.0kW (550.0HP)			
				29	400.0kW (650.0HP)			
				30	500.0kW (800.0HP)			
07	0h1E07	Base frequency	M2-Base Freq	30.00–400.00 (Hz)		60.00	Δ	p.251
08	0h1E08	Control mode	M2-Ctrl Mode	0	V/F	0: V/F	Δ	p.251
				2	Slip Compen			

Code	Comm. Address	Name	LCD Display	Setting Range	Initial Value	Property*	Ref.
10	0h1E0A	Number of motor poles	M2-Pole Num	2–48	Dependent on motor settings	Δ	p.251
11	0h1E0B	Rated slip speed	M2-Rated Slip	0–3000 (RPM)		Δ	p.251
12	0h1E0C	Motor rated current	M2-Rated Curr	1.0–1000.0 (A)		Δ	p.251
13	0h1E0D	Motor no-load current	M2-Noload Curr	0.0–1000.0 (A)		Δ	p.251
14	0h1E0E	Motor rated voltage	M2-Rated Volt	0[72], 170–480 (V)		Δ	p.251
15	0h1E0F	Motor efficiency	M2-Efficiency	70–100 (%)		Δ	p.251
17	-	Stator resistor	M2-Rs	0.000–9.999 (Ω)		Δ	p.251
18	0h1E12	Leakage inductance	M2-Lsigma	0.00–99.99 (mH)		Δ	p.251
25	0h1E19	V/F pattern	M2-V/F Patt	0 Linear 1 Square 2 User V/F	0: Linear	Δ	p.251
26	0h1E1A	Forward torque boost	M2-Fwd Boost	0.0–15.0 (%)	2.0 (0.75~90kW) 1.0 (110~500kW)	Δ	p.251
27	0h1E1B	Reverse torque boost	M2-Rev Boost	0.0–15.0 (%)	2.0 (0.75~90kW) 1.0 (110~	Δ	p.251

[72] Refer to <4.15 Output Voltage Setting>

Code	Comm. Address	Name	LCD Display	Setting Range	Initial Value		Property*	Ref.
						500kW		
28	0h1E1C	Stall prevention level	M2-Stall Lev	30–150 (%)	130		Δ	p.251
29	0h1E1D	Electronic thermal 1 minute rating	M2-ETH 1 min	100–150 (%)	120		Δ	p.251
30	0h1E1E	Electronic thermal continuous rating	M2-ETH Cont	50–120 (%)	100		Δ	p.251

8.15 Trip (TRIP Last-x) and Config (CNF) Mode

8.15.1 Trip Mode (TRP Last-x)

Code	Name	LCD Display	Setting Range	Initial Value	Ref.
00	Trip type display	Trip Name(x)	-	-	-
01	Frequency reference at trip	Output Freq	-	-	-
02	Output current at trip	Output Current	-	-	-
03	Acceleration/ Deceleration state at trip	Inverter State	-	-	-
04	DC section state	DCLink Voltage	-	-	-
05	NTC temperature	Temperature	-	-	-
06	Input terminal state	DI State	-	0000 0000	-

Code	Name	LCD Display	Setting Range		Initial Value	Ref.
07	Output terminal state	DO State	-		000	-
08	Trip time after Power on	Trip On Time	-		00/00/00 00: 00	-
09	Trip time after operation start	Trip Run Time	-		00/00/00 00: 00	-
10	Delete trip history	Trip Delete?	0	No	-	
			1	Yes		

8.15.2 Config Mode (CNF)

Code	Name	LCD Display	Setting Range		Initial Value	Ref.
00	Jump code	Jump Code	1–99		42	p.70
01	Keypad language selection	Language Sel	0: English		0: English	
02	LCD contrast adjustment	LCD Contrast	-		-	p.263
10	Inverter S/W version	Inv S/W Ver	-		-	p.263
11	Keypad S/W version	KeypadS/W Ver	-		-	p.263
12	Keypad title version	KPD Title Ver	-		-	p.263
20	Display item condition display window	Anytime Para	0	Frequency	0: Frequency	p.316
21	Monitor mode display 1	Monitor Line-1	1	Speed	0: Frequency	p.316
22	Monitor mode display 2	Monitor Line-2	2	Output Current	2: OutputCurrent	p.316
23	Monitor mode display 3	Monitor Line-3	3	Output Voltage	3: OutputVoltage	p.316
			4	Output Power		

Code	Name	LCD Display	Setting Range		Initial Value	Ref.
			5	WHour Counter		
			6	DCLink Voltage		
			7	DI State		
			8	DO State		
			9	V1 Monitor(V)		
			10	V1 Monitor(%)		
			13	V2 Monitor(V)		
			14	V2 Monitor(%)		
			15	I2 Monitor(mA)		
			16	I2 Monitor(%)		
			17	PID Output		
			18	PID Ref Value		
			19	PID Fdb Value		
			20	EPID1 Out		
			21	EPID1 Ref Val		
			22	EPID1 Fdb Val		
			23	EPID2 Out		
			24	EPID2 Ref Val		
			25	EPID2Fdb Val		
24	Monitor mode initialize	Mon Mode Init	0	No	0: No	p.316
			1	Yes		
30[73]	Option slot 1 type display	Option-1 Type	-		-	p.263
31	Option slot 2 type display	Option-2 Type	-		-	p.263
32	Option slot 3 type display	Option-3 Type	-		-	p.263

[73] Please refer to the communication option manual for details.

Code	Name	LCD Display	Setting Range		Initial Value	Ref.
40	Parameter initialization	Parameter Init	0	No	0: No	p.257
			1	All Grp		
			2	DRV Grp		
			3	BAS Grp		
			4	ADV Grp		
			5	CON Grp		
			6	IN Grp		
			7	OUT Grp		
			8	COM Grp		
			9	PID Grp		
			10	EPI Grp		
			11	AP1 Grp		
			12	AP2 Grp		
			13	AP3 Grp		
			14	PRT Grp		
			15	M2 Grp		
41	Display changed Parameter	Changed Para	0	View All	0: View All	p.259
			1	View Changed		
42	Multi key item	Multi Key Sel	0	None	0: None	p.259
			1	UserGrpSelKey		
43	Macro function item	Macro Select	0	Basic	0: Basic	p.264
			1	Compressor		
			2	Supply Fan		
			3	Exhaust Fan		
			4	Cooling Tower		
			5	Circul. Pump		
			6	Vacuum Pump		
			7	Constant Torque		

Code	Name	LCD Display	Setting Range		Initial Value	Ref.
44	Trip history deletion	Erase All Trip	0	No	0: No	p.263
			1	Yes		
45	User registration code deletion	UserGrpAllDel	0	No	0: No	p.260
			1	Yes		
46	Read parameters	Parameter Read	0	No	0: No	p.256
			1	Yes		
47	Write parameters	Parameter Write	0	No	0: No	p.256
			1	Yes		
48	Save parameters	Parameter Save	0	No	0: No	p.256
			1	Yes		
50	Hide parameter mode	View Lock Set	0-9999		Un-locked	p.258
51	Password protection (hide parameters)	View Lock Pw	0-9999		Password	p.258
52	Lock parameter edit	Key Lock Set	0–9999		Un-locked	p.258
53	Password for locking parameter edit	Key Lock Pw	0–9999		Password	p.258
60	Additional title update	Add Title Up	0	No	0: No	p.263
			1	Yes		
61	Simple parameter setting	Easy Start On	0	No	1: Yes	p.261
			1	Yes		
62	Power consumption initialization	WHCount Reset	0	No	0: No	p.261
			1	Yes		

70	Accumulated inverter motion time	On-time	00000DAY 00:00		-	p.318
71	Accumulated inverter operation time	Run-time	00000DAY 00:00		-	p.318
72	Accumulated inverter operation time initialization	Time Reset	0	No	0: No	p.318
			1	Yes		
73[74]	Real Time	Real Time	Date-Format			
74	Accumulated cooling fan operation time	Fan Time	00000DAY 00:00		-	p.318
75	Reset of accumulated cooling fan operation time	Fan Time Rst	0	No	0: No	p.318
			1	Yes		

www.nicsanat.com
021-87700210
NIC SANAT
نیک صنعت

[74] The date format can be changed according to the AP3-06 settings.

8.16 Macro Groups

The following table lists detailed parameter settings for each macro configuration.

8.16.1 Compressor (MC1) Group

www.nicsanat.com
021-87700210
NIC SANAT
نیک صنعت

Macro Code	Code	LCD Display	Initial Value		Macro Code	Code	LCD Display	Initial Value	
0	-	Jump Code	1: CODE		1	DRV-3	Acc Time	0.75~90kW	10.0
								110~250 kW	30.0
								315~500 kW	50.0
2	DRV-4	Dec Time	0.75~90kW	20.0	3	DRV-7	Freq Ref Src	1: Keypad-2	
			110~250 kW	60.0					
			315~500 kW	100.0					
4	DRV-9	Control Mode	1: Slip Compen		5	DRV-11	JOG Frequency	20.00	
6	DRV-12	JOG Acc Time	13.0		7	DRV-13	JOG Dec Time	20.0	
8	DRV-15	Torque Boost	1: Auto1		9	BAS-70	Acc Time-1	10.0	
10	BAS-71	Dec Time-1	20.0		11	ADV-10	Power-on Run	1: Yes	
12	ADV-65	U/D Save Mode	1: Yes		13	CON-4	Carrier Freq	3.0	
14	CON-70	SS Mode	0: Flying Start-1		15	CON-77	KEB Select	1: Yes	
16	OUT-32	Relay 2	14: Run		17	PID-1	PID Sel	1: Yes	
18	PID-3	PID Output	0.00		19	PID-4	PID Ref Value	-	
20	PID-5	PID Fdb Value	-		21	PID-10	PID Ref 1 Src	4: I2	

22	PID-11	PID Ref 1 Set	0.5000	23	PID-25	PID P-Gain 1	70.00
24	PID-26	PID I-Time 1	5.0	25	PID-50	PID Unit Sel	5: inWC

Macro Code	Code	LCD Display	Initial Value	Macro Code	Code	LCD Display	Initial Value
26	PID-51	PID Unit Scale	4: x0.01	27	AP-1 8	PID Sleep1Freq	5.00
28	AP1-21	Pre-PID Freq	30.00	29	AP1-22	Pre-PID Delay	120.0
30	PRT-8	RST Restart	11	31	PRT-9	Retry Number	3
32	PRT-10	Retry Delay	4.0	33	PRT-011	Lost KPD Mode	3: Dec
34	PRT-12	Lost Cmd Mode	2: Dec	35	PRT-13	Lost Cmd Time	4.0
36	PRT-40	ETH Trip Sel	1: Free Run	37	PRT-42	ETH 1 min	120
38	PRT-52	Stall Level 1	130	39	PRT-66	DB Warn %ED	10
40	PRT-70	LDT Sel	1: Warning	41	PRT-72	LDT Source	0: Output Current
42	PRT-75	LDT Band Width	LDT Source/10% of the Max. value	43	PRT-76	LDT Freq	20.00
44	M2-4	M2-Acc Time	10.0	45	M2-5	M2-Dec Time	20.0
46	M2-8	M2-Ctrl Mode	1: Slip Compen	47	M2-28	M2-Stall Lev	125
48	M2-29	M2-ETH 1 min	120				

Macro Code	Code	LCD Display	Initial Value	Macro Code	Code	LCD Display	Initial Value
26	PID-51	PID Unit Scale	4: x0.01	27	AP-1 8	PID Sleep1Freq	5.00
28	AP1-21	Pre-PID Freq	30.00	29	AP1-22	Pre-PID Delay	120.0
30	PRT-8	RST Restart	11	31	PRT-9	Retry Number	3
32	PRT-10	Retry Delay	4.0	33	PRT-011	Lost KPD Mode	3: Dec
34	PRT-12	Lost Cmd Mode	2: Dec	35	PRT-13	Lost Cmd Time	4.0
36	PRT-40	ETH Trip Sel	1: Free Run	37	PRT-42	ETH 1 min	120
38	PRT-52	Stall Level 1	130	39	PRT-66	DB Warn %ED	10
40	PRT-70	LDT Sel	1: Warning	41	PRT-72	LDT Source	0: Output Current
42	PRT-75	LDT Band Width	LDT Source/10% of the Max. value	43	PRT-76	LDT Freq	20.00
44	M2-4	M2-Acc Time	10.0	45	M2-5	M2-Dec Time	20.0
46	M2-8	M2-Ctrl Mode	1: Slip Compen	47	M2-28	M2-Stall Lev	125
48	M2-29	M2-ETH 1 min	120				

8.16.2 Supply Fan (MC2) Group

Macro Code	Code	LCD Display	Initial Value		Macro Code	Code	LCD Display	Initial Value	
0	-	Jump Code	1:CODE		1	DRV-3	Acc Time	0.75~90 kW	20.0
								110~250k W	60.0
								315~500k W	100.0
2	DRV-4	Dec Time	0.75~90 kW	30.0	3	DRV-7	Freq Ref Src	1: Keypad-2	
			110~250k W	90.0					
			315~500k W	150.0					
4	DRV-11	JOG Frequen cy	15.00		5	BAS-7	V/F Pattern	1: Square	
6	BAS-70	Acc Time-1	20.0		7	BAS-71	Dec Time-1	30.0	
8	ADV-10	Power-on Run	1:Yes		9	ADV-50	E-Save Mode	2: Auto	
10	ADV-64	FAN Control	2:Temp Control		11	ADV-65	U/D Save Mode	1:Yes	
12	CON-4	Carrier Freq	3.0		13	CON-70	SS Mode	1: Flying Start-2	
14	CON-77	KEB Select	1:Yes		15	OUT-32	Relay 2	10: Over Voltage	
16	PID-1	PID Sel	1:Yes		17	PID-3	PID Output	-	
18	PID-4	PID Ref Value	-		19	PID-5	PID Fdb Value	-	
20	PID-10	PID Ref 1 Src	4: I2		21	PID-11	PID Ref 1 Set	0.5000	
22	PID-25	PID P-Gain 1	40.00		23	PID-26	PID I-Time 1	20.0	
24	PID-36	PID Out Inv	1:Yes		25	PID-50	PID Unit Sel	5: inWC	
26	PID-51	PID Unit Scale	4: x0.01		27	AP- 21	Pre-PID Freq	30.00	
28	AP1-22	Pre-PID Delay	120.0		29	PRT- 8	RST Restart	11	

30	PRT-9	Retry Number	0		31	PRT-10	Retry Delay	20.0
32	PRT-11	Lost KPD Mode	3: Dec		33	PRT-12	Lost Cmd Mode	3: Hold Input
34	PRT-40	ETH Trip Sel	1: Free Run		35	PRT-42	ETH 1 min	120
36	PRT-52	Stall Level 1	130		37	PRT-70	LDT Sel	1: Warning
38	PRT-72	LDT Source	0: Output Current		39	PRT-75	LDT Band Width	LDT Source /10% of the Max. value
40	PRT-76	LDT Freq	10.00		41	PRT-77	LDT Restart DT	500.0
42	M2-25	M2-V/F Patt	1: Square		43	M2-28	M2-Stall Lev	110
44	M2-29	M2-ETH 1 min	110					

8.16.3 Exhaust Fan (MC3) Group

www.nicsanat.com
021-87700210
NIC SANAT
نیک صنعت

Macro Code	Code	LCD Display	Initial Value		Macro Code	Code	LCD Display	Initial Value	
0	-	Jump Code	1: CODE		1	DRV-3	Acc Time	0.75~90 kW	20.0
								110~250kW	60.0
								315~500kW	100.0
2	DRV-4	Dec Time	0.75~90 kW	30.0	3	DRV-7	Freq Ref Src	1: Keypad-2	
			110~250kW	90.0					
			315~500kW	150.0					
4	DRV-11	JOG Frequency	15.00		5	BAS-7	V/F Pattern	1: Square	
6	BAS-70	Acc Time-1	20.0		7	BAS-71	Dec Time-1	30.0	
8	BAS-72	Acc Time-2	22.5		9	BAS-73	Dec Time-2	32.5	
10	BAS-74	Acc Time-3	25.0		11	BAS-75	Dec Time-3	35.0	
12	BAS-76	Acc Time-4	27.5		13	BAS-77	Dec Time-4	37.5	
14	BAS-78	Acc Time-5	30.0		15	BAS-80	Acc Time-6	32.5	
16	BAS-81	Dec Time-6	42.5		17	BAS-82	Acc Time-7	35.0	
18	BAS-83	Dec Time-7	45.0		19	ADV-10	Power-on Run	1: Yes	
20	ADV-50	E-Save Mode	2: Auto		21	ADV-64	FAN Control	2: Temp Control	
22	ADV-	U/D	1: Yes		23	CON-4	Carrier	3.0	

Macro Code	Code	LCD Display	Initial Value		Macro Code	Code	LCD Display	Initial Value	
0	-	Jump Code	1: CODE		1	DRV-3	Acc Time	0.75~90 kW	20.0
								110~250kW	60.0
								315~500kW	100.0
2	DRV-4	Dec Time	0.75~90 kW	30.0	3	DRV-7	Freq Ref Src	1: Keypad-2	
			110~250kW	90.0					
			315~500kW	150.0					
4	DRV-11	JOG Frequency	15.00		5	BAS-7	V/F Pattern	1: Square	
6	BAS-70	Acc Time-1	20.0		7	BAS-71	Dec Time-1	30.0	
8	BAS-72	Acc Time-2	22.5		9	BAS-73	Dec Time-2	32.5	
10	BAS-74	Acc Time-3	25.0		11	BAS-75	Dec Time-3	35.0	
12	BAS-76	Acc Time-4	27.5		13	BAS-77	Dec Time-4	37.5	
14	BAS-78	Acc Time-5	30.0		15	BAS-80	Acc Time-6	32.5	
16	BAS-81	Dec Time-6	42.5		17	BAS-82	Acc Time-7	35.0	
18	BAS-83	Dec Time-7	45.0		19	ADV-10	Power-on Run	1: Yes	
20	ADV-50	E-Save Mode	2: Auto		21	ADV-64	FAN Control	2: Temp Control	
	65	Save					Freq		

Macro Code	Code	LCD Display	Initial Value		Macro Code	Code	LCD Display	Initial Value	
0	-	Jump Code	1: CODE		1	DRV-3	Acc Time	0.75~90 kW	20.0
								110~250kW	60.0
								315~500kW	100.0
2	DRV-4	Dec Time	0.75~90 kW	30.0	3	DRV-7	Freq Ref Src	1: Keypad-2	
			110~250kW	90.0					
			315~500kW	150.0					
4	DRV-11	JOG Frequency	15.00		5	BAS-7	V/F Pattern	1: Square	
6	BAS-70	Acc Time-1	20.0		7	BAS-71	Dec Time-1	30.0	
8	BAS-72	Acc Time-2	22.5		9	BAS-73	Dec Time-2	32.5	
10	BAS-74	Acc Time-3	25.0		11	BAS-75	Dec Time-3	35.0	
12	BAS-76	Acc Time-4	27.5		13	BAS-77	Dec Time-4	37.5	
14	BAS-78	Acc Time-5	30.0		15	BAS-80	Acc Time-6	32.5	
16	BAS-81	Dec Time-6	42.5		17	BAS-82	Acc Time-7	35.0	
18	BAS-83	Dec Time-7	45.0		19	ADV-10	Power-on Run	1: Yes	
20	ADV-50	E-Save Mode	2: Auto		21	ADV-64	FAN Control	2: Temp Control	
		Mode							

Macro Code	Code	LCD Display	Initial Value		Macro Code	Code	LCD Display	Initial Value	
0	-	Jump Code	1: CODE		1	DRV-3	Acc Time	0.75~90 kW	20.0
								110~250kW	60.0
								315~500kW	100.0
2	DRV-4	Dec Time	0.75~90 kW	30.0	3	DRV-7	Freq Ref Src	1: Keypad-2	
			110~250kW	90.0					
			315~500kW	150.0					
4	DRV-11	JOG Frequency	15.00		5	BAS-7	V/F Pattern	1: Square	
6	BAS-70	Acc Time-1	20.0		7	BAS-71	Dec Time-1	30.0	
8	BAS-72	Acc Time-2	22.5		9	BAS-73	Dec Time-2	32.5	
10	BAS-74	Acc Time-3	25.0		11	BAS-75	Dec Time-3	35.0	
12	BAS-76	Acc Time-4	27.5		13	BAS-77	Dec Time-4	37.5	
14	BAS-78	Acc Time-5	30.0		15	BAS-80	Acc Time-6	32.5	
16	BAS-81	Dec Time-6	42.5		17	BAS-82	Acc Time-7	35.0	
18	BAS-83	Dec Time-7	45.0		19	ADV-10	Power-on Run	1: Yes	
20	ADV-50	E-Save Mode	2: Auto		21	ADV-64	FAN Control	2: Temp Control	
24	CON-	SS	1: Flying Start-2		25	CON-	KEB	1: Yes	

Macro Code	Code	LCD Display	Initial Value		Macro Code	Code	LCD Display	Initial Value	
0	-	Jump Code	1: CODE		1	DRV-3	Acc Time	0.75~90 kW	20.0
								110~250kW	60.0
								315~500kW	100.0
2	DRV-4	Dec Time	0.75~90 kW	30.0	3	DRV-7	Freq Ref Src	1: Keypad-2	
			110~250kW	90.0					
			315~500kW	150.0					
4	DRV-11	JOG Frequency	15.00		5	BAS-7	V/F Pattern	1: Square	
6	BAS-70	Acc Time-1	20.0		7	BAS-71	Dec Time-1	30.0	
8	BAS-72	Acc Time-2	22.5		9	BAS-73	Dec Time-2	32.5	
10	BAS-74	Acc Time-3	25.0		11	BAS-75	Dec Time-3	35.0	
12	BAS-76	Acc Time-4	27.5		13	BAS-77	Dec Time-4	37.5	
14	BAS-78	Acc Time-5	30.0		15	BAS-80	Acc Time-6	32.5	
16	BAS-81	Dec Time-6	42.5		17	BAS-82	Acc Time-7	35.0	
18	BAS-83	Dec Time-7	45.0		19	ADV-10	Power-on Run	1: Yes	
20	ADV-50	E-Save Mode	2: Auto		21	ADV-64	FAN Control	2: Temp Control	
	70	Mode				77	Select		

Macro Code	Code	LCD Display	Initial Value		Macro Code	Code	LCD Display	Initial Value	
0	-	Jump Code	1: CODE		1	DRV-3	Acc Time	0.75~90 kW	20.0
								110~250kW	60.0
								315~500kW	100.0
2	DRV-4	Dec Time	0.75~90 kW	30.0	3	DRV-7	Freq Ref Src	1: Keypad-2	
			110~250kW	90.0					
			315~500kW	150.0					
4	DRV-11	JOG Frequency	15.00		5	BAS-7	V/F Pattern	1: Square	
6	BAS-70	Acc Time-1	20.0		7	BAS-71	Dec Time-1	30.0	
8	BAS-72	Acc Time-2	22.5		9	BAS-73	Dec Time-2	32.5	
10	BAS-74	Acc Time-3	25.0		11	BAS-75	Dec Time-3	35.0	
12	BAS-76	Acc Time-4	27.5		13	BAS-77	Dec Time-4	37.5	
14	BAS-78	Acc Time-5	30.0		15	BAS-80	Acc Time-6	32.5	
16	BAS-81	Dec Time-6	42.5		17	BAS-82	Acc Time-7	35.0	
18	BAS-83	Dec Time-7	45.0		19	ADV-10	Power-on Run	1: Yes	
20	ADV-50	E-Save Mode	2: Auto		21	ADV-64	FAN Control	2: Temp Control	
26	OUT-	Relay	10: Over Voltage		27	PID-1	PID Sel	1: Yes	

Macro Code	Code	LCD Display	Initial Value		Macro Code	Code	LCD Display	Initial Value	
0	-	Jump Code	1: CODE		1	DRV-3	Acc Time	0.75~90 kW	20.0
								110~250kW	60.0
								315~500kW	100.0
2	DRV-4	Dec Time	0.75~90 kW	30.0	3	DRV-7	Freq Ref Src	1: Keypad-2	
			110~250kW	90.0					
			315~500kW	150.0					
4	DRV-11	JOG Frequency	15.00		5	BAS-7	V/F Pattern	1: Square	
6	BAS-70	Acc Time-1	20.0		7	BAS-71	Dec Time-1	30.0	
8	BAS-72	Acc Time-2	22.5		9	BAS-73	Dec Time-2	32.5	
10	BAS-74	Acc Time-3	25.0		11	BAS-75	Dec Time-3	35.0	
12	BAS-76	Acc Time-4	27.5		13	BAS-77	Dec Time-4	37.5	
14	BAS-78	Acc Time-5	30.0		15	BAS-80	Acc Time-6	32.5	
16	BAS-81	Dec Time-6	42.5		17	BAS-82	Acc Time-7	35.0	
18	BAS-83	Dec Time-7	45.0		19	ADV-10	Power-on Run	1: Yes	
20	ADV-50	E-Save Mode	2: Auto		21	ADV-64	FAN Control	2: Temp Control	
	32	2							

Macro Code	Code	LCD Display	Initial Value		Macro Code	Code	LCD Display	Initial Value	
0	-	Jump Code	1: CODE		1	DRV-3	Acc Time	0.75~90 kW	20.0
								110~250kW	60.0
								315~500kW	100.0
2	DRV-4	Dec Time	0.75~90 kW	30.0	3	DRV-7	Freq Ref Src	1: Keypad-2	
			110~250kW	90.0					
			315~500kW	150.0					
4	DRV-11	JOG Frequency	15.00		5	BAS-7	V/F Pattern	1: Square	
6	BAS-70	Acc Time-1	20.0		7	BAS-71	Dec Time-1	30.0	
8	BAS-72	Acc Time-2	22.5		9	BAS-73	Dec Time-2	32.5	
10	BAS-74	Acc Time-3	25.0		11	BAS-75	Dec Time-3	35.0	
12	BAS-76	Acc Time-4	27.5		13	BAS-77	Dec Time-4	37.5	
14	BAS-78	Acc Time-5	30.0		15	BAS-80	Acc Time-6	32.5	
16	BAS-81	Dec Time-6	42.5		17	BAS-82	Acc Time-7	35.0	
18	BAS-83	Dec Time-7	45.0		19	ADV-10	Power-on Run	1: Yes	
20	ADV-50	E-Save Mode	2: Auto		21	ADV-64	FAN Control	2: Temp Control	
28	PID-3	PID	-		29	PID-4	PID Ref	-	

Macro Code	Code	LCD Display	Initial Value		Macro Code	Code	LCD Display	Initial Value	
0	-	Jump Code	1: CODE		1	DRV-3	Acc Time	0.75~90 kW	20.0
								110~250kW	60.0
								315~500kW	100.0
2	DRV-4	Dec Time	0.75~90 kW	30.0	3	DRV-7	Freq Ref Src	1: Keypad-2	
			110~250kW	90.0					
			315~500kW	150.0					
4	DRV-11	JOG Frequency	15.00		5	BAS-7	V/F Pattern	1: Square	
6	BAS-70	Acc Time-1	20.0		7	BAS-71	Dec Time-1	30.0	
8	BAS-72	Acc Time-2	22.5		9	BAS-73	Dec Time-2	32.5	
10	BAS-74	Acc Time-3	25.0		11	BAS-75	Dec Time-3	35.0	
12	BAS-76	Acc Time-4	27.5		13	BAS-77	Dec Time-4	37.5	
14	BAS-78	Acc Time-5	30.0		15	BAS-80	Acc Time-6	32.5	
16	BAS-81	Dec Time-6	42.5		17	BAS-82	Acc Time-7	35.0	
18	BAS-83	Dec Time-7	45.0		19	ADV-10	Power-on Run	1: Yes	
20	ADV-50	E-Save Mode	2: Auto		21	ADV-64	FAN Control	2: Temp Control	
		Outp					Value		

Macro Code	Code	LCD Display	Initial Value		Macro Code	Code	LCD Display	Initial Value	
0	-	Jump Code	1: CODE		1	DRV-3	Acc Time	0.75~90 kW	20.0
								110~250kW	60.0
								315~500kW	100.0
2	DRV-4	Dec Time	0.75~90 kW	30.0	3	DRV-7	Freq Ref Src	1: Keypad-2	
			110~250kW	90.0					
			315~500kW	150.0					
4	DRV-11	JOG Frequency	15.00		5	BAS-7	V/F Pattern	1: Square	
6	BAS-70	Acc Time-1	20.0		7	BAS-71	Dec Time-1	30.0	
8	BAS-72	Acc Time-2	22.5		9	BAS-73	Dec Time-2	32.5	
10	BAS-74	Acc Time-3	25.0		11	BAS-75	Dec Time-3	35.0	
12	BAS-76	Acc Time-4	27.5		13	BAS-77	Dec Time-4	37.5	
14	BAS-78	Acc Time-5	30.0		15	BAS-80	Acc Time-6	32.5	
16	BAS-81	Dec Time-6	42.5		17	BAS-82	Acc Time-7	35.0	
18	BAS-83	Dec Time-7	45.0		19	ADV-10	Power-on Run	1: Yes	
20	ADV-50	E-Save Mode	2: Auto		21	ADV-64	FAN Control	2: Temp Control	
		ut							

Macro Code	Code	LCD Display	Initial Value		Macro Code	Code	LCD Display	Initial Value	
0	-	Jump Code	1: CODE		1	DRV-3	Acc Time	0.75~90 kW	20.0
								110~250kW	60.0
								315~500kW	100.0
2	DRV-4	Dec Time	0.75~90 kW	30.0	3	DRV-7	Freq Ref Src	1: Keypad-2	
			110~250kW	90.0					
			315~500kW	150.0					
4	DRV-11	JOG Frequency	15.00		5	BAS-7	V/F Pattern	1: Square	
6	BAS-70	Acc Time-1	20.0		7	BAS-71	Dec Time-1	30.0	
8	BAS-72	Acc Time-2	22.5		9	BAS-73	Dec Time-2	32.5	
10	BAS-74	Acc Time-3	25.0		11	BAS-75	Dec Time-3	35.0	
12	BAS-76	Acc Time-4	27.5		13	BAS-77	Dec Time-4	37.5	
14	BAS-78	Acc Time-5	30.0		15	BAS-80	Acc Time-6	32.5	
16	BAS-81	Dec Time-6	42.5		17	BAS-82	Acc Time-7	35.0	
18	BAS-83	Dec Time-7	45.0		19	ADV-10	Power-on Run	1: Yes	
20	ADV-50	E-Save Mode	2: Auto		21	ADV-64	FAN Control	2: Temp Control	
30	PID-5	PID	-		31	PID-10	PID Ref 1	4: I2	

Macro Code	Code	LCD Display	Initial Value		Macro Code	Code	LCD Display	Initial Value	
0	-	Jump Code	1: CODE		1	DRV-3	Acc Time	0.75~90 kW	20.0
								110~250kW	60.0
								315~500kW	100.0
2	DRV-4	Dec Time	0.75~90 kW	30.0	3	DRV-7	Freq Ref Src	1: Keypad-2	
			110~250kW	90.0					
			315~500kW	150.0					
4	DRV-11	JOG Frequency	15.00		5	BAS-7	V/F Pattern	1: Square	
6	BAS-70	Acc Time-1	20.0		7	BAS-71	Dec Time-1	30.0	
8	BAS-72	Acc Time-2	22.5		9	BAS-73	Dec Time-2	32.5	
10	BAS-74	Acc Time-3	25.0		11	BAS-75	Dec Time-3	35.0	
12	BAS-76	Acc Time-4	27.5		13	BAS-77	Dec Time-4	37.5	
14	BAS-78	Acc Time-5	30.0		15	BAS-80	Acc Time-6	32.5	
16	BAS-81	Dec Time-6	42.5		17	BAS-82	Acc Time-7	35.0	
18	BAS-83	Dec Time-7	45.0		19	ADV-10	Power-on Run	1: Yes	
20	ADV-50	E-Save Mode	2: Auto		21	ADV-64	FAN Control	2: Temp Control	
		Fdb					Src		

Macro Code	Code	LCD Display	Initial Value		Macro Code	Code	LCD Display	Initial Value	
0	-	Jump Code	1: CODE		1	DRV-3	Acc Time	0.75~90 kW	20.0
								110~250kW	60.0
								315~500kW	100.0
2	DRV-4	Dec Time	0.75~90 kW	30.0	3	DRV-7	Freq Ref Src	1: Keypad-2	
			110~250kW	90.0					
			315~500kW	150.0					
4	DRV-11	JOG Frequency	15.00		5	BAS-7	V/F Pattern	1: Square	
6	BAS-70	Acc Time-1	20.0		7	BAS-71	Dec Time-1	30.0	
8	BAS-72	Acc Time-2	22.5		9	BAS-73	Dec Time-2	32.5	
10	BAS-74	Acc Time-3	25.0		11	BAS-75	Dec Time-3	35.0	
12	BAS-76	Acc Time-4	27.5		13	BAS-77	Dec Time-4	37.5	
14	BAS-78	Acc Time-5	30.0		15	BAS-80	Acc Time-6	32.5	
16	BAS-81	Dec Time-6	42.5		17	BAS-82	Acc Time-7	35.0	
18	BAS-83	Dec Time-7	45.0		19	ADV-10	Power-on Run	1: Yes	
20	ADV-50	E-Save Mode	2: Auto		21	ADV-64	FAN Control	2: Temp Control	
		Value							

Macro Code	Code	LCD Display	Initial Value		Macro Code	Code	LCD Display	Initial Value	
0	-	Jump Code	1: CODE		1	DRV-3	Acc Time	0.75~90 kW	20.0
								110~250kW	60.0
								315~500kW	100.0
2	DRV-4	Dec Time	0.75~90 kW	30.0	3	DRV-7	Freq Ref Src	1: Keypad-2	
			110~250kW	90.0					
			315~500kW	150.0					
4	DRV-11	JOG Frequency	15.00		5	BAS-7	V/F Pattern	1: Square	
6	BAS-70	Acc Time-1	20.0		7	BAS-71	Dec Time-1	30.0	
8	BAS-72	Acc Time-2	22.5		9	BAS-73	Dec Time-2	32.5	
10	BAS-74	Acc Time-3	25.0		11	BAS-75	Dec Time-3	35.0	
12	BAS-76	Acc Time-4	27.5		13	BAS-77	Dec Time-4	37.5	
14	BAS-78	Acc Time-5	30.0		15	BAS-80	Acc Time-6	32.5	
16	BAS-81	Dec Time-6	42.5		17	BAS-82	Acc Time-7	35.0	
18	BAS-83	Dec Time-7	45.0		19	ADV-10	Power-on Run	1: Yes	
20	ADV-50	E-Save Mode	2: Auto		21	ADV-64	FAN Control	2: Temp Control	
32	PID-11	PID	0.5000		33	PID-25	PID P-	35.00	

Macro Code	Code	LCD Display	Initial Value		Macro Code	Code	LCD Display	Initial Value	
0	-	Jump Code	1: CODE		1	DRV-3	Acc Time	0.75~90 kW	20.0
								110~250kW	60.0
								315~500kW	100.0
2	DRV-4	Dec Time	0.75~90 kW	30.0	3	DRV-7	Freq Ref Src	1: Keypad-2	
			110~250kW	90.0					
			315~500kW	150.0					
4	DRV-11	JOG Frequency	15.00		5	BAS-7	V/F Pattern	1: Square	
6	BAS-70	Acc Time-1	20.0		7	BAS-71	Dec Time-1	30.0	
8	BAS-72	Acc Time-2	22.5		9	BAS-73	Dec Time-2	32.5	
10	BAS-74	Acc Time-3	25.0		11	BAS-75	Dec Time-3	35.0	
12	BAS-76	Acc Time-4	27.5		13	BAS-77	Dec Time-4	37.5	
14	BAS-78	Acc Time-5	30.0		15	BAS-80	Acc Time-6	32.5	
16	BAS-81	Dec Time-6	42.5		17	BAS-82	Acc Time-7	35.0	
18	BAS-83	Dec Time-7	45.0		19	ADV-10	Power-on Run	1: Yes	
20	ADV-50	E-Save Mode	2: Auto		21	ADV-64	FAN Control	2: Temp Control	
		Ref 1					Gain 1		

Macro Code	Code	LCD Display	Initial Value		Macro Code	Code	LCD Display	Initial Value	
0	-	Jump Code	1: CODE		1	DRV-3	Acc Time	0.75~90 kW	20.0
								110~250kW	60.0
								315~500kW	100.0
2	DRV-4	Dec Time	0.75~90 kW	30.0	3	DRV-7	Freq Ref Src	1: Keypad-2	
			110~250kW	90.0					
			315~500kW	150.0					
4	DRV-11	JOG Frequency	15.00		5	BAS-7	V/F Pattern	1: Square	
6	BAS-70	Acc Time-1	20.0		7	BAS-71	Dec Time-1	30.0	
8	BAS-72	Acc Time-2	22.5		9	BAS-73	Dec Time-2	32.5	
10	BAS-74	Acc Time-3	25.0		11	BAS-75	Dec Time-3	35.0	
12	BAS-76	Acc Time-4	27.5		13	BAS-77	Dec Time-4	37.5	
14	BAS-78	Acc Time-5	30.0		15	BAS-80	Acc Time-6	32.5	
16	BAS-81	Dec Time-6	42.5		17	BAS-82	Acc Time-7	35.0	
18	BAS-83	Dec Time-7	45.0		19	ADV-10	Power-on Run	1: Yes	
20	ADV-50	E-Save Mode	2: Auto		21	ADV-64	FAN Control	2: Temp Control	
		Set							

Macro Code	Code	LCD Display	Initial Value		Macro Code	Code	LCD Display	Initial Value	
0	-	Jump Code	1: CODE		1	DRV-3	Acc Time	0.75~90 kW	20.0
								110~250kW	60.0
								315~500kW	100.0
2	DRV-4	Dec Time	0.75~90 kW	30.0	3	DRV-7	Freq Ref Src	1: Keypad-2	
			110~250kW	90.0					
			315~500kW	150.0					
4	DRV-11	JOG Frequency	15.00		5	BAS-7	V/F Pattern	1: Square	
6	BAS-70	Acc Time-1	20.0		7	BAS-71	Dec Time-1	30.0	
8	BAS-72	Acc Time-2	22.5		9	BAS-73	Dec Time-2	32.5	
10	BAS-74	Acc Time-3	25.0		11	BAS-75	Dec Time-3	35.0	
12	BAS-76	Acc Time-4	27.5		13	BAS-77	Dec Time-4	37.5	
14	BAS-78	Acc Time-5	30.0		15	BAS-80	Acc Time-6	32.5	
16	BAS-81	Dec Time-6	42.5		17	BAS-82	Acc Time-7	35.0	
18	BAS-83	Dec Time-7	45.0		19	ADV-10	Power-on Run	1: Yes	
20	ADV-50	E-Save Mode	2: Auto		21	ADV-64	FAN Control	2: Temp Control	
34	PID-26	PID I-	15.0		35	PID-36	PID Out	1: Yes	

Macro Code	Code	LCD Display	Initial Value		Macro Code	Code	LCD Display	Initial Value	
0	-	Jump Code	1: CODE		1	DRV-3	Acc Time	0.75~90 kW	20.0
								110~250kW	60.0
								315~500kW	100.0
2	DRV-4	Dec Time	0.75~90 kW	30.0	3	DRV-7	Freq Ref Src	1: Keypad-2	
			110~250kW	90.0					
			315~500kW	150.0					
4	DRV-11	JOG Frequency	15.00		5	BAS-7	V/F Pattern	1: Square	
6	BAS-70	Acc Time-1	20.0		7	BAS-71	Dec Time-1	30.0	
8	BAS-72	Acc Time-2	22.5		9	BAS-73	Dec Time-2	32.5	
10	BAS-74	Acc Time-3	25.0		11	BAS-75	Dec Time-3	35.0	
12	BAS-76	Acc Time-4	27.5		13	BAS-77	Dec Time-4	37.5	
14	BAS-78	Acc Time-5	30.0		15	BAS-80	Acc Time-6	32.5	
16	BAS-81	Dec Time-6	42.5		17	BAS-82	Acc Time-7	35.0	
18	BAS-83	Dec Time-7	45.0		19	ADV-10	Power-on Run	1: Yes	
20	ADV-50	E-Save Mode	2: Auto		21	ADV-64	FAN Control	2: Temp Control	
		Time					Inv		

Macro Code	Code	LCD Display	Initial Value		Macro Code	Code	LCD Display	Initial Value	
0	-	Jump Code	1: CODE		1	DRV-3	Acc Time	0.75~90 kW	20.0
								110~250kW	60.0
								315~500kW	100.0
2	DRV-4	Dec Time	0.75~90 kW	30.0	3	DRV-7	Freq Ref Src	1: Keypad-2	
			110~250kW	90.0					
			315~500kW	150.0					
4	DRV-11	JOG Frequency	15.00		5	BAS-7	V/F Pattern	1: Square	
6	BAS-70	Acc Time-1	20.0		7	BAS-71	Dec Time-1	30.0	
8	BAS-72	Acc Time-2	22.5		9	BAS-73	Dec Time-2	32.5	
10	BAS-74	Acc Time-3	25.0		11	BAS-75	Dec Time-3	35.0	
12	BAS-76	Acc Time-4	27.5		13	BAS-77	Dec Time-4	37.5	
14	BAS-78	Acc Time-5	30.0		15	BAS-80	Acc Time-6	32.5	
16	BAS-81	Dec Time-6	42.5		17	BAS-82	Acc Time-7	35.0	
18	BAS-83	Dec Time-7	45.0		19	ADV-10	Power-on Run	1: Yes	
20	ADV-50	E-Save Mode	2: Auto		21	ADV-64	FAN Control	2: Temp Control	
		1							

36	PID-50	PID Unit Sel	5: inWC	37	PID-51	PID Unit Scale	4: x0.01
38	AP1-21	Pre-PID Freq	30.00	39	PRT-8	RST Restart	11
40	PRT-9	Retry Number	0	41	PRT-10	Retry Delay	10.0
42	PRT-11	Lost KPD Mode	3: Dec	43	PRT-12	Lost Cmd Mode	3: Hold Input
44	PRT-40	ETH Trip Sel	1:Free-Run	45	PRT-42	ETH 1 min	120
46	PRT-52	Stall Level 1	130	47	PRT-70	LDT Sel	1: Warning
48	PRT-72	LDT Source	0: Output Current	49	PRT-75	LDT Band Width	LDT Source/10% of the Max. value
50	PRT-76	LDT Freq	10.00	51	PRT-77	LDT Restart DT	300.0
52	M2-4	M2-Acc Time	10.0	53	M2-5	M2-Dec Time	20.0
54	M2-25	M2-V/F Patt	1: Square	55	M2-28	M2-Stall Lev	110
56	M2-29	M2-ETH 1 min	110				

www.nicsanat.com
021-87700210
NIC SANAT
نیک صنعت

8.16.4 Cooling Tower (MC4) Group

www.nicsanat.com
021-87700210
NIC SANAT
نیک صنعت

Macro Code	Code	LCD Display	Initial Value		Macro Code	Code	LCD Display	Initial Value	
0	-	Jump Code	1: CODE		1	DRV-3	Acc Time	0.75~90 kW	20.0
								110~250 kW	60.0
								315~500 kW	100.0
2	DRV-4	Dec Time	0.75~90 kW	30.0	3	DRV-7	Freq Ref Src	1: Keypad-2	
			110~250 kW	90.0					
			315~500 kW	150.0					
4	DRV-11	JOG Frequency	15.00		5	BAS-7	V/F Pattern	1: Square	
6	BAS-70	Acc Time-1	20.0		7	BAS-71	Dec Time-1	30.0	
8	BAS-072	Acc Time-2	22.5		9	BAS-73	Dec Time-2	32.5	
10	BAS-74	Acc Time-3	25.0		11	BAS-75	Dec Time-3	35.0	
12	BAS-76	Acc Time-4	27.5		13	BAS-77	Dec Time-4	37.5	
14	BAS-78	Acc Time-5	30.0		15	BAS-80	Acc Time-6	32.5	
16	BAS-81	Dec Time-6	42.5		17	BAS-82	Acc Time-7	35.0	
18	BAS-83	Dec Time-7	45.0		19	ADV-10	Power-on Run	1: Yes	
20	ADV-50	E-Save Mode	2: Auto		21	ADV-64	FAN Control	2: Temp Control	
22	ADV-65	U/D Save Mode	1: Yes		23	CON-4	Carrier Freq	3.0	

24	CON-70	SS Mode	1: Flying Start-2	25	CON-77	KEB Select	1: Yes
26	OUT-32	Relay 2	10: Over Voltage	27	PID-1	PID Sel	1: Yes

28	PID-3	PID Output	-	29	PID-4	PID Ref Value	-
30	PID -5	PID Fdb Value	-	31	PID-10	PID Ref 1 Src	4: I2
32	PID-11	PID Ref 1 Set	50.00	33	PID-25	PID P-Gain 1	40.00
34	PID-26	PID I-Time 1	15.0	35	PID-36	PID Out Inv	1: Yes
36	PID-50	PID Unit Sel	3: °F	37	PID-51	PID Unit Scale	2: x1
38	AP1-21	Pre-PID Freq	30.00	39	AP1-22	Pre-PID Delay	120.0
40	PRT-8	RST Restart	11	41	PRT-9	Retry Number	0
42	PRT-10	Retry Delay	10.0	43	PRT-11	Lost KPD Mode	3: Dec
44	PRT-12	Lost Cmd Mode	3: Hold Input	45	PRT-40	ETH Trip Sel	1: Free Run
46	PRT-42	ETH 1 min	120	47	PRT-52	Stall Level 1	130
48	PRT-70	LDT Sel	1: Warning	49	PRT-72	LDT Source	0: Output Current
50	PRT-75	LDT Band Width	LDT Source/10% of the Max. value	51	PRT-76	LDT Freq	10.00
52	PRT 77	LDT Restart DT	300.0	53	M2-25	M2-V/F Patt	1: Square
54	M2 28	M2-Stall Lev	110	55	M2-29	M2-ETH 1 min	110

8.16.5 Circulation Pump (MC5) Group

www.nicsanat.com
021-87700210
NIC SANAT
نیک صنعت

Macro Code	Code	LCD Display	Initial Value		Macro Code	Code	LCD Display	Initial Value	
0	-	Jump Code	1:CODE		1	DRV-3	Acc Time	0.75~90 kW	30.0
								110~250 kW	90.0
								315~500 kW	150.0
2	DRV-4	Dec Time	0.75~90 kW	50.0	3	DRV-7	Freq Ref Src	1: Keypad-2	
			110~250 kW	150.0					
			315~500 kW	250.0					
4	DRV-9	Control Mode	1: Slip Compen		5	DRV-11	JOG Frequency	15.00	
6	DRV-12	JOG Acc Time	30.0		7	DRV-13	JOG Dec Time	50.0	
8	DRV-15	Torque Boost	1: Auto1		9	BAS-7	V/F Pattern	1: Square	
10	BAS-70	Acc Time-1	30.0		11	BAS-71	Dec Time-1	50.0	
12	BAS-72	Acc Time-2	32.0		13	BAS-73	Dec Time-2	52.0	
14	BAS-74	Acc Time-3	34.0		15	BAS-75	Dec Time-3	54.0	
16	BAS-76	Acc Time-4	36.0		17	BAS-77	Dec Time-4	56.0	
18	BAS-78	Acc Time-5	38.0		19	BAS-79	Dec Time-5	58.0	
20	BAS-80	Acc Time-6	40.0		21	BAS-81	Dec Time-6	59.0	
22	BAS-82	Acc Time-7	42.0		23	BAS-83	Dec Time-7	60.0	

24	ADV-10	Power-on Run	1: Yes	25	ADV-25	Freq Limit Lo	20.00
26	ADV-50	E-Save Mode	2: Auto	27	ADV-64	FAN Control	2: Temp Control
28	ADV-65	U/D Save Mode	1: Yes	29	CON-4	Carrier Freq	3.0
30	CON-70	SS Mode	0: Flying Start-1	31	CON-77	KEB Select	1: Yes
32	OUT-32	Relay 2	14: Run	33	PID-1	PID Sel	1: Yes
34	PID-3	PID Output	-	35	PID-4	PID Ref Value	-
36	PID-5	PID Fdb Value	-	37	PID-10	PID Ref 1 Src	4: I2
38	PID-11	PID Ref 1 Set	5.000	39	PID-25	PID P-Gain 1	50.00
40	PID-26	PID I-Time 1	5.0	41	PID-50	PID Unit Sel	2: PSI
42	PID-51	PID Unit Scale	3: x0.1	43	AP1-8	PID Sleep1Freq	10.00
44	AP1-21	Pre-PID Freq	30.00	45	AP1-22	Pre-PID Delay	120.0
46	PRT-8	RST Restart	11	47	PRT-9	Retry Number	3
48	PRT-10	Retry Delay	5.0	49	PRT-11	Lost KPD Mode	3: Dec
50	PRT-12	Lost Cmd Mode	3: Hold Input	51	PRT-40	ETH Trip Sel	1: Free Run
52	PRT-42	ETH 1 min	120	53	PRT-52	Stall Level 1	130
54	PRT-60	PipeBroken Sel	1: Warning	55	PRT-61	PipeBroken Lev	90.0
56	PRT-62	Pipe Broken DT	22.0	57	PRT-70	LDT Sel	1: Warning

58	PRT-72	LDT Source	0: Output Current	59	PRT-75	LDT Band Width	LDT Source/10% of the Max. value
60	PRT-76	LDT Freq	10.00	61	PRT-77	LDT Restart DT	100.0
62	M2-4	M2-Acc Time	10.0	63	M2-5	M2-Dec Time	20.0
64	M2-25	M2-V/F Patt	1: Square	65	M2-28	M2-Stall Lev	125
66	M2-29	M2-ETH 1 min	120				

www.nicsanat.com
021-87700210
NIC SANAT
نیک صنعت

8.16.6 Vacuum Pump (MC6) Group

www.nicsanat.com
021-87700210
NIC SANAT
نیک صنعت

Macro Code	Code	LCD Display	Initial Value	
0	-	Jump Code	1: CODE	
2	DRV-4	Dec Time	0.75~90 kW	60.0
			110~250 kW	180.0
			315~500 kW	300.0
4	DRV-9	Control Mode	1: Slip Compen	
6	DRV-12	JOG Acc Time	30.0	
8	DRV-15	Torque Boost	1: Auto1	
10	BAS-70	Acc Time-1	30.0	
12	BAS-72	Acc Time-2	32.0	
14	BAS-74	Acc Time-3	34.0	
16	BAS-76	Acc Time-4	36.0	
18	BAS-78	Acc Time-5	38.0	
20	BAS-80	Acc Time-6	40.0	
22	BAS-82	Acc Time-7	42.0	

Macro Code	Code	LCD Display	Initial Value	
1	DRV-3	Acc Time	0.75~90 kW	30.0
			110~250 kW	90.0
			315~500 kW	150.0
3	DRV-7	Freq Ref Src	1: Keypad-2	
5	DRV-11	JOG Frequency	20.00	
7	DRV-13	JOG Dec Time	60.0	
9	BAS-7	V/F Pattern	1: Square	
11	BAS-71	Dec Time-1	50.0	
13	BAS-73	Dec Time-2	52.0	
15	BAS-75	Dec Time-3	54.0	
17	BAS-77	Dec Time-4	56.0	
19	BAS-79	Dec Time-5	58.0	
21	BAS-81	Dec Time-6	59.0	
23	BAS-83	Dec Time-7	60.0	

Macro Code	Code	LCD Display	Initial Value		Macro Code	Code	LCD Display	Initial Value	
0	-	Jump Code	1: CODE		1	DRV-3	Acc Time	0.75~90 kW	30.0
								110~250 kW	90.0
								315~500 kW	150.0
2	DRV-4	Dec Time	0.75~90 kW	60.0	3	DRV-7	Freq Ref Src	1: Keypad-2	
			110~250 kW	180.0					
			315~500 kW	300.0					
4	DRV-9	Control Mode	1: Slip Compen		5	DRV-11	JOG Frequency	20.00	
6	DRV-12	JOG Acc Time	30.0		7	DRV-13	JOG Dec Time	60.0	
8	DRV-15	Torque Boost	1: Auto1		9	BAS-7	V/F Pattern	1: Square	
10	BAS-70	Acc Time-1	30.0		11	BAS-71	Dec Time-1	50.0	
12	BAS-72	Acc Time-2	32.0		13	BAS-73	Dec Time-2	52.0	
14	BAS-74	Acc Time-3	34.0		15	BAS-75	Dec Time-3	54.0	
16	BAS-76	Acc Time-4	36.0		17	BAS-77	Dec Time-4	56.0	
24	ADV-10	Power-on Run	1: Yes		25	ADV-25	Freq Limit Lo	40.00	
26	ADV-64	FAN Control	2: Temp Control		27	ADV-65	U/D Save Mode	1: Yes	
28	CON-4	Carrier Freq	3.0		29	CON-70	SS Mode	0: Flying Start-1	

Macro Code	Code	LCD Display	Initial Value		Macro Code	Code	LCD Display	Initial Value	
0	-	Jump Code	1: CODE		1	DRV-3	Acc Time	0.75~90 kW	30.0
								110~250 kW	90.0
								315~500 kW	150.0
2	DRV-4	Dec Time	0.75~90 kW	60.0	3	DRV-7	Freq Ref Src	1: Keypad-2	
			110~250 kW	180.0					
			315~500 kW	300.0					
4	DRV-9	Control Mode	1: Slip Compen		5	DRV-11	JOG Frequency	20.00	
6	DRV-12	JOG Acc Time	30.0		7	DRV-13	JOG Dec Time	60.0	
8	DRV-15	Torque Boost	1: Auto1		9	BAS-7	V/F Pattern	1: Square	
10	BAS-70	Acc Time-1	30.0		11	BAS-71	Dec Time-1	50.0	
12	BAS-72	Acc Time-2	32.0		13	BAS-73	Dec Time-2	52.0	
14	BAS-74	Acc Time-3	34.0		15	BAS-75	Dec Time-3	54.0	
16	BAS-76	Acc Time-4	36.0		17	BAS-77	Dec Time-4	56.0	
30	CON-77	KEB Select	1: Yes		31	OUT-32	Relay 2	14: Run	
32	PID-1	PID Sel	1: Yes		33	PID-3	PID Output	-	
34	PID-4	PID Ref Value	-		35	PID-5	PID Fdb Value	-	

Macro Code	Code	LCD Display	Initial Value		Macro Code	Code	LCD Display	Initial Value	
0	-	Jump Code	1: CODE		1	DRV-3	Acc Time	0.75~90 kW	30.0
								110~250 kW	90.0
								315~500 kW	150.0
2	DRV-4	Dec Time	0.75~90 kW	60.0	3	DRV-7	Freq Ref Src	1: Keypad-2	
			110~250 kW	180.0					
			315~500 kW	300.0					
4	DRV-9	Control Mode	1: Slip Compen		5	DRV-11	JOG Frequency	20.00	
6	DRV-12	JOG Acc Time	30.0		7	DRV-13	JOG Dec Time	60.0	
8	DRV-15	Torque Boost	1: Auto1		9	BAS-7	V/F Pattern	1: Square	
10	BAS-70	Acc Time-1	30.0		11	BAS-71	Dec Time-1	50.0	
12	BAS-72	Acc Time-2	32.0		13	BAS-73	Dec Time-2	52.0	
14	BAS-74	Acc Time-3	34.0		15	BAS-75	Dec Time-3	54.0	
16	BAS-76	Acc Time-4	36.0		17	BAS-77	Dec Time-4	56.0	
36	PID-10	PID Ref 1 Src	4: I2		37	PID-11	PID Ref 1 Set	5.000	
38	PID-25	PID P-Gain 1	50.00		39	PID-26	PID I-Time 1	2.5	
40	PID-50	PID Unit Sel	5: inWC		41	PID-51	PID Unit Scale	3: x0.1	

Macro Code	Code	LCD Display	Initial Value		Macro Code	Code	LCD Display	Initial Value	
0	-	Jump Code	1: CODE		1	DRV-3	Acc Time	0.75~90 kW	30.0
								110~250 kW	90.0
								315~500 kW	150.0
2	DRV-4	Dec Time	0.75~90 kW	60.0	3	DRV-7	Freq Ref Src	1: Keypad-2	
			110~250 kW	180.0					
			315~500 kW	300.0					
4	DRV-9	Control Mode	1: Slip Compen		5	DRV-11	JOG Frequency	20.00	
6	DRV-12	JOG Acc Time	30.0		7	DRV-13	JOG Dec Time	60.0	
8	DRV-15	Torque Boost	1: Auto1		9	BAS-7	V/F Pattern	1: Square	
10	BAS-70	Acc Time-1	30.0		11	BAS-71	Dec Time-1	50.0	
12	BAS-72	Acc Time-2	32.0		13	BAS-73	Dec Time-2	52.0	
14	BAS-74	Acc Time-3	34.0		15	BAS-75	Dec Time-3	54.0	
16	BAS-76	Acc Time-4	36.0		17	BAS-77	Dec Time-4	56.0	
42	AP1-21	Pre-PID Freq	30.00		43	PRT-8	RST Restart	11	
44	PRT-9	Retry Number	3		45	PRT-10	Retry Delay	4.0	
46	PRT-11	Lost KPD Mode	3: Dec		47	PRT-12	Lost Cmd Mode	3: Hold Input	

Macro Code	Code	LCD Display	Initial Value		Macro Code	Code	LCD Display	Initial Value	
0	-	Jump Code	1: CODE		1	DRV-3	Acc Time	0.75~90 kW	30.0
								110~250 kW	90.0
								315~500 kW	150.0
2	DRV-4	Dec Time	0.75~90 kW	60.0	3	DRV-7	Freq Ref Src	1: Keypad-2	
			110~250 kW	180.0					
			315~500 kW	300.0					
4	DRV-9	Control Mode	1: Slip Compen		5	DRV-11	JOG Frequency	20.00	
6	DRV-12	JOG Acc Time	30.0		7	DRV-13	JOG Dec Time	60.0	
8	DRV-15	Torque Boost	1: Auto1		9	BAS-7	V/F Pattern	1: Square	
10	BAS-70	Acc Time-1	30.0		11	BAS-71	Dec Time-1	50.0	
12	BAS-72	Acc Time-2	32.0		13	BAS-73	Dec Time-2	52.0	
14	BAS-74	Acc Time-3	34.0		15	BAS-75	Dec Time-3	54.0	
16	BAS-76	Acc Time-4	36.0		17	BAS-77	Dec Time-4	56.0	
48	PRT-40	ETH Trip Sel	1: Free Run		49	PRT-42	ETH 1 min	120	
50	PRT-52	Stall Level 1	130		51	PRT-60	PipeBroken Sel	1: Warning	
52	PRT-61	PipeBroken Lev	90.0		53	PRT-62	Pipe Broken DT	22.0	

Macro Code	Code	LCD Display	Initial Value		Macro Code	Code	LCD Display	Initial Value	
0	-	Jump Code	1: CODE		1	DRV-3	Acc Time	0.75~90 kW	30.0
								110~250 kW	90.0
								315~500 kW	150.0
2	DRV-4	Dec Time	0.75~90 kW	60.0	3	DRV-7	Freq Ref Src	1: Keypad-2	
			110~250 kW	180.0					
			315~500 kW	300.0					
4	DRV-9	Control Mode	1: Slip Compen		5	DRV-11	JOG Frequency	20.00	
6	DRV-12	JOG Acc Time	30.0		7	DRV-13	JOG Dec Time	60.0	
8	DRV-15	Torque Boost	1: Auto1		9	BAS-7	V/F Pattern	1: Square	
10	BAS-70	Acc Time-1	30.0		11	BAS-71	Dec Time-1	50.0	
12	BAS-72	Acc Time-2	32.0		13	BAS-73	Dec Time-2	52.0	
14	BAS-74	Acc Time-3	34.0		15	BAS-75	Dec Time-3	54.0	
16	BAS-76	Acc Time-4	36.0		17	BAS-77	Dec Time-4	56.0	
54	PRT-66	DB Warn %ED	10		55	PRT-70	LDT Sel	1: Warning	
56	PRT-72	LDT Source	0: Output Current		57	PRT-75	LDT Band Width	LDT Source /10% of the Max. value	
58	PRT-76	LDT Freq	15.00		59	PRT-77	LDT Restart DT	100.0	

Macro Code	Code	LCD Display	Initial Value		Macro Code	Code	LCD Display	Initial Value	
0	-	Jump Code	1: CODE		1	DRV-3	Acc Time	0.75~90 kW	30.0
								110~250 kW	90.0
								315~500 kW	150.0
2	DRV-4	Dec Time	0.75~90 kW	60.0	3	DRV-7	Freq Ref Src	1: Keypad-2	
			110~250 kW	180.0					
			315~500 kW	300.0					
4	DRV-9	Control Mode	1: Slip Compen		5	DRV-11	JOG Frequenc y	20.00	
6	DRV-12	JOG Acc Time	30.0		7	DRV-13	JOG Dec Time	60.0	
8	DRV-15	Torque Boost	1: Auto1		9	BAS-7	V/F Pattern	1: Square	
10	BAS-70	Acc Time-1	30.0		11	BAS-71	Dec Time-1	50.0	
12	BAS-72	Acc Time-2	32.0		13	BAS-73	Dec Time-2	52.0	
14	BAS-74	Acc Time-3	34.0		15	BAS-75	Dec Time-3	54.0	
16	BAS-76	Acc Time-4	36.0		17	BAS-77	Dec Time-4	56.0	
60	M2-4	M2-Acc Time	10.0		61	M2-5	M2-Dec Time	20.0	
62	M2-8	M2-Ctrl Mode	1: Slip Compen		63	M2-25	M2-V/F Patt	1: Square	
64	M2-28	M2-Stall Lev	125		65	M2-29	M2-ETH 1 min	120	

8.16.7 Constant Torque (MC7) Group

Macro Code	Code	LCD Display	Initial Value		Macro Code	Code	LCD Display	Initial Value	
0	-	Jump Code	1:CODE		1	DRV-3	Acc Time	0.75~90 kW	30.0
								110~250 kW	90.0
								315~500 kW	150.0
2	DRV-4	Dec Time	0.75~90 kW	32.0	3	DRV-7	Freq Ref Src	1: Keypad-2	
			110~250 kW	60.0					
			315~500 kW	100.0					
4	DRV-9	Control Mode	1: Slip Compen		5	DRV-12	JOG Acc Time	10.0	
6	DRV-13	JOG Dec Time	20.0		7	DRV-15	Torque Boost	1: Auto1	
8	BAS-70	Acc Time-1	10.0		9	BAS-71	Dec Time-1	20.0	
10	BAS-72	Acc Time-2	12.5		11	BAS-73	Dec Time-2	22.5	
12	BAS-74	Acc Time-3	15.0		13	BAS-75	Dec Time-3	25.0	
14	BAS-76	Acc Time-4	17.5		15	BAS-77	Dec Time-4	27.5	
16	BAS-78	Acc Time-5	20.0		17	BAS-79	Dec Time-5	30.0	
18	BAS-80	Acc Time-6	22.5		19	BAS-81	Dec Time-6	32.5	
20	BAS-82	Acc Time-7	25.0		21	BAS-83	Dec Time-7	35.0	

Macro Code	Code	LCD Display	Initial Value		Macro Code	Code	LCD Display	Initial Value	
0	-	Jump Code	1:CODE		1	DRV-3	Acc Time	0.75~90 kW	30.0
								110~250 kW	90.0
								315~500 kW	150.0
2	DRV-4	Dec Time	0.75~90 kW	32.0	3	DRV-7	Freq Ref Src	1: Keypad-2	
			110~250 kW	60.0					
			315~500 kW	100.0					
4	DRV-9	Control Mode	1: Slip Compen		5	DRV-12	JOG Acc Time	10.0	
6	DRV-13	JOG Dec Time	20.0		7	DRV-15	Torque Boost	1: Auto1	
8	BAS-70	Acc Time-1	10.0		9	BAS-71	Dec Time-1	20.0	
10	BAS-72	Acc Time-2	12.5		11	BAS-73	Dec Time-2	22.5	
22	ADV-1	Acc Pattern	1: S-curve		23	ADV-2	Dec Pattern	1: S-curve	
24	ADV-25	Freq Limit Lo	20.00		25	ADV-74	RegenAvd Sel	1: Yes	
26	CON-4	Carrier Freq	3.0		27	CON-70	SS Mode	0: Flying Start-1	
28	CON-77	KEB Select	1: Yes		29	OUT-32	Relay 2	14: Run	
30	AP1-21	Pre-PID Freq	30.00		31	AP1-22	Pre-PID Delay	120.0	
32	PRT-12	Lost Cmd Mode	2: Dec		33	PRT-40	ETH-Trip Sel	2:Dec	

Macro Code	Code	LCD Display	Initial Value		Macro Code	Code	LCD Display	Initial Value	
0	-	Jump Code	1:CODE		1	DRV-3	Acc Time	0.75~90 kW	30.0
								110~250 kW	90.0
								315~500 kW	150.0
2	DRV-4	Dec Time	0.75~90 kW	32.0	3	DRV-7	Freq Ref Src	1: Keypad-2	
			110~250 kW	60.0					
			315~500 kW	100.0					
4	DRV-9	Control Mode	1: Slip Compen		5	DRV-12	JOG Acc Time	10.0	
6	DRV-13	JOG Dec Time	20.0		7	DRV-15	Torque Boost	1: Auto1	
8	BAS-70	Acc Time-1	10.0		9	BAS-71	Dec Time-1	20.0	
10	BAS-72	Acc Time-2	12.5		11	BAS-73	Dec Time-2	22.5	
34	PRT-66	DB Warn %ED	10		35	PRT-70	LDT Sel	1: Warning	
36	PRT-72	LDT Source	0:Output Current		37	PRT-75	LDT Band Width	LDT Source/10% of the Max. value	
38	PRT-76	LDT Freq	5.00		39	PRT-77	LDT Restart DT	250.0	
40	M2-4	M2-Acc Time	10.0		41	M2-5	M2-Dec Time	20.0	
42	M2-8	M2-Ctrl Mode	1: Slip Compen						

9 Troubleshooting

This chapter explains how to troubleshoot a problem when inverter protective functions, fault trips, warning signals, or faults occur. If the inverter does not work normally after following the suggested troubleshooting steps, please contact the LSIS customer service center.

9.1 Trip and Warning

When the inverter detects a fault, it stops the operation (trips) or sends out a warning signal. When a trip or warning occurs, the keypad displays the information briefly. Detailed information is shown on the LCD display. Users can read the warning message at PRT-90. When more than 2 trips occur at roughly the same time, the keypad displays the higher priority fault information. In the keypad, fault trips with higher priority are displayed first. Use the [Up], [Down], [Left] or [Right] cursor key on the keypad to view the fault trip information. The fault conditions can be categorized as follows

- Level: When the fault is corrected, the trip or warning signal disappears and the fault is not saved in the fault history.
- Latch: When the fault is corrected and a reset input signal is provided, the trip or warning signal disappears.
- Fatal: When the fault is corrected, the fault trip or warning signal disappears only after the user turns off the inverter, waits until the charge indicator light goes off, and turns the inverter on again. If the inverter is still in a fault condition after powering it on again, please contact the supplier or the LSIS customer service center.

9.1.1 Fault Trips

Protection Functions for Output Current and Input Voltage

LCD Display	Type	Description
Over Load	Latch	Displayed when the motor overload trip is activated and the actual load level exceeds the set level. Operates when PRT-20 is set to a value other than '0'.

LCD Display	Type	Description
Under Load	Latch	Displayed when the motor underload trip is activated and the actual load level is less than the set level. Operates when PRT-27 is set to a value other than '0'.
Over Current1	Latch	Displayed when inverter output current exceeds 180% of the rated current.
Over Voltage	Latch	Displayed when internal DC circuit voltage exceeds the specified value.
Low Voltage	Level	Displayed when internal DC circuit voltage is less than the specified value.
Low Voltage2	Latch	Displayed when internal DC circuit voltage is less than the specified value during inverter operation.
Ground Trip	Latch	Displayed when a ground fault trip occurs on the output side of the inverter and causes the current to exceed the specified value. The specified value varies depending on inverter capacity.
E-Thermal	Latch	Displayed based on inverse time-limit thermal characteristics to prevent motor overheating. Operates when PRT-40 is set to a value other than '0'.
Out Phase Open	Latch	Displayed when a 3-phase inverter output has one or more phases in an open circuit condition. Operates when bit 1 of PRT-05 is set to '1'.
In Phase Open	Latch	Displayed when a 3-phase inverter input has one or more phases in an open circuit condition. Operates only when bit 2 of PRT-05 is set to '1'.
Inverter OLT	Latch	Displayed when the inverter has been protected from overload and resultant overheating, based on inverse time-limit thermal characteristics. Allowable overload rates for the inverter are 120% for 1 min and 140% for 5 sec.
No Motor Trip	Latch	Displayed when the motor is not connected during inverter operation. Operates when PRT-31 is set to '1'.

Protection Functions Using Abnormal Internal Circuit Conditions and External Signals

LCD Display	Type	Description
Over Heat	Latch	Displayed when the temperature of the inverter heat sink exceeds

LCD Display	Type	Description
		the specified value.
Over Current2	Latch	Displayed when the DC circuit in the inverter detects a specified level of excessive, short circuit current.
External Trip	Latch	Displayed when an external fault signal is provided by the multi-function terminal. Set one of the multi-function input terminals at IN-65-71 to '4 (External Trip)' to enable external trip.
BX	Level	Displayed when the inverter output is blocked by a signal provided from the multi-function terminal. Set one of the multi-function input terminals at IN-65-71 to '5 (BX)' to enable input block function.
H/W-Diag	Fatal	Displayed when an error is detected in the memory (EEPRom), analog-digital converter output (ADC Off Set) or CPU watchdog (Watch Dog-1, Watch Dog-2). EEP Err: An error in reading/writing parameters due to keypad or memory (EEPRom) fault. ADC Off Set: An error in the current sensing circuit (U/V/W terminal, current sensor, etc.).
NTC Open	Latch	Displayed when an error is detected in the temperature sensor of the Insulated Gate Bipolar Transistor (IGBT).
Fan Trip	Latch	Displayed when an error is detected in the cooling fan. Set PRT-79 to '0' to activate fan trip (for models below 22 kW capacity).
InFan Trip	Latch	It occurs when an abnormality is detected in the cooling fan inside the inverter with inverter capacity of 110 kW to 500 kW. Selecting PRT - 79 code to 0 will work.
Thermal Trip	Latch	Triggered when the input temperature is higher than the temperature set by the user.
Lost KeyPad	Latch	Triggered when a communication error occurs between the keypad and the inverter, when the keypad is the command source, and PRT-11 (Lost KPD Mode) is set to any other value than '0'.
Fuse Open	Latch	If an input stage fuse breaks with an inverter of 315 kW or more, a fault will occur.

General Fault Trips

LCD Display	Type	Description
Damper Err	Latch	Triggered when the damper open signal or run command signal is longer than the value set at AP2-45 (Damper Check T) during a fan operation.
MMC Interlock	Latch	Triggered when AP1-55 is set to '2' and all auxiliary motors are interlocked during an MMC operation.
CleanRPTErr	Latch	Triggered when the pump clean operation is operated frequently. The conditions may be modified with theAP2-36–AP2-37 settings.
Pipe Broken	Latch	Triggered when a pipe is broken during the pump operation. Set PRT-60.
Level Detect	Latch	Triggered when the inverter output current or power is lower or higher than the values set by the user. Set the values at PRT-71–PRT-77.
Broken Belt	Latch	Triggered when PRT-91 is set to Free Run

Option Protection

LCD Display	Type	Description
Lost Command	Level	Displayed when a frequency or operation command error is detected during inverter operation by controllers other than the keypad (e.g., using a terminal block and a communication mode). Activate by setting PRT-12 to any value other than '0'.
IO Board Trip	Latch	Displayed when the I/O board or external communication card is not connected to the inverter or there is a bad connection.
ParaWrite Trip	Latch	Displayed when communication fails during parameter writing. Occurs due to a control cable fault or a bad connection.
Option Trip-1	Latch	Displayed when a communication error is detected between the inverter and the communication board. Occurs when the communication option card is installed.

9.1.2 Warning Message

LCD Display	Description
Over Load	Displayed when a motor is overloaded. Set PRT-17 to '1' to enable. Set OUT-31–35 or OUT-36 to '5 (Over Load)' to receive the overload warning output signals.
Under Load	Displayed when the motor is underloaded. Set PRT-25 is to '1'. Set the digital output terminal or relay (OUT-31–35 or OUT-36) to' 7 (Under Load)' to receive the underload warning output signals.
INV Over Load	Displayed when the overload time equivalent to 60% of the inverter overheat protection (inverter IOLT) level, is accumulated. Set the digital output terminals or relay (OUT-31–35 or OUT-36) to '6 (IOL)' to receive the inverter overload warning output signals.
Lost Command	Lost command warning alarm occurs even with PRT-12 set to '0'. The warning alarm occurs based on the condition set at PRT-13-15. Set the digital output terminals or relay (OUT-31–35 or OUT-36) to '13 (Lost Command)' to receive the lost command warning output signals.
Fan Warning	Displayed when an error is detected from the cooling fan while PRT-79 is set to'1'. Set the digital output terminals or relay (OUT-31–35 or OUT-36) to '8 (Fan Warning)' to receive the fan warning output signals.
DB Warn %ED	Displayed when the DB resistor usage rate exceeds the set value. Set the detection level at PRT-66.
Fire Mode	When there is a fire, Fire Mode forces the inverter to ignore certain fault trips and continue to operate. Set the digital output terminals or relay (OUT-31–35 or OUT-36) to '27 (Fire Mode)' to receive the fire mode warning output signals.
Pipe Broken	Displayed when a pipe is broken during pump operation. Set the digital output terminals or relay (OUT-31–35 or OUT-36) to '28 (Pipe Broken)' to receive the pipe break warning output signals.
Lost Keypad	Displayed when a communication error occurs between the keypad and the inverter, when PRT-11 (Lost KPD Mode) is set to any other value than '0', and a run command is given from the keypad. Set the digital output terminals or relay (OUT-31–35 or OUT-36) to '24 (Lost KPD)' to receive the lost keypad warning output signals.
Level Detect	Displayed during a level detect state. Set PRT-70 to '1 (warning)' to enable.
CAP. Warning	Displayed when capacitor life expectancy level goes below the level set by the

LCD Display	Description
	user. Set the digital output terminals or relay (OUT-31–35 or OUT-36) to '34 (CAPWarning)' to receive the capacitor life warning output signals.
Fan ExChange	Displayed when the cooling fans need replacing. Set the digital output terminals or relay (OUT-31–35 or OUT-36) to '35 (FanExChange)' to receive the fan replacement warning output signals.
Low Battery	Displayed when the RTC battery voltage drops to or below 2 V. To receive a warning output signal, set PRT-90 (Low Battery) to 'Yes.
Broken Belt	Displayed when PRT-91 is set to warning and the inverter becomes on the condition of broken belt.
Load Tune	Displayed when the values of 'AP2-03 and AP2-04' are more than the values of 'AP2-09 and AP2-10' and the function of load tuning is not normal.
PareWrite Fail	Displayed when the function of smart copier is not normal.
Rs Tune Err	Displayed when the function of Rs tuning is not normal . For example, auto tuning is performed without wiring the motor.
Lsig Tune Err	Displayed when the function of Lsigma tuning is not normal . For example, auto tuning is performed without wiring the motor.
KPD H.O.A Lock	If [DRV-05 KPD H.O.A Lock] sets HAND-OFF-AUTO disabled, it lasts one second when HAND-OFF-AUTO key is pressed using user keypad
InFan Warning	It occurs when an abnormality is detected in the cooling fan inside the inverter with inverter capacity of 110 kW to 500 kW.

9.2 Troubleshooting Fault Trips

When a fault trip or warning occurs due to a protection function, refer to the following table for possible causes and remedies.

Type	Cause	Remedy
Over Load	The load is greater than the motor's rated capacity.	Ensure that the motor and inverter have appropriate capacity ratings.
	The set value for the overload trip level (PRT-21) is too low.	Increase the set value for the overload trip level.
Under Load	There is a motor-load connection	Replace the motor and inverter with

Type	Cause	Remedy
	problem.	models with lower capacity.
	The set value for underload level (PRT-24) is less than the system's minimum load.	Reduce the set value for the underload level.
Over Current1	Acc/Dec time is too short, compared to load inertia (GD^2).	Increase Acc/Dec time.
	The inverter load is greater than the rated capacity.	Replace the inverter with a model that has increased capacity.
	The inverter supplied an output while the motor was idling.	Operate the inverter after the motor has stopped or use the speed search function (CON-70).
	The mechanical brake of the motor is operating too fast.	Check the mechanical brake.
Over Voltage	Deceleration time is too short for the load inertia (GD^2).	Increase the acceleration time.
	A generative load occurs at the inverter output.	Use the braking unit.
	The input voltage is too high.	Determine if the input voltage is above the specified value.
Low Voltage	The input voltage is too low.	Determine if the input voltage is below the specified value.
	A load greater than the power capacity is connected to the system (a welder, direct motor connection, etc.)	Increase the power capacity.
	The magnetic contactor connected to the power source has a faulty connection.	Replace the magnetic contactor.
Low Voltage2	The input voltage has decreased during the operation.	Determine if the input voltage is above the specified value.
	An input phase-loss has occurred.	Check the input wiring.
	The power supply magnetic contactor is faulty.	Replace the magnetic contractor.

Type	Cause	Remedy
Ground Trip	A ground fault has occurred in the inverter output wiring.	Check the output wiring.
	The motor insulation is damaged.	Replace the motor.
E-Thermal	The motor has overheated.	Reduce the load or operation frequency.
	The inverter load is greater than the rated capacity.	Replace the inverter with a model that has increased capacity.
	The set value for electronic thermal protection is too low.	Set an appropriate electronic thermal level.
	The inverter has been operated at low speed for an extended duration.	Replace the motor with a model that supplies extra power to the cooling fan.
Out Phase Open	The magnetic contactor on the output side has a connection fault.	Check the magnetic contactor on the output side.
	The output wiring is faulty.	Check the output wiring.
In Phase Open	The magnetic contactor on the input side has a connection fault.	Check the magnetic contactor on the input side.
	The input wiring is faulty.	Check the input wiring.
	The DC link capacitor needs to be replaced.	Replace the DC link capacitor. Contact the retailer or the LSIS customer service center.
Inverter OLT	The load is greater than the rated motor capacity.	Replace the motor and inverter with models that have increased capacity.
	The torque boost level is too high.	Reduce the torque boost level.
Over Heat	There is a problem with the cooling system.	Determine if a foreign object is obstructing the air inlet, outlet, or vent.
	The inverter cooling fan has been operated for an extended period.	Replace the cooling fan.
	The ambient temperature is too high.	Keep the ambient temperature below 50 ℃.
Over Current2	Output wiring is short-circuited.	Check the output wiring.
	There is a fault with the electronic semiconductor (IGBT).	Do not operate the inverter. Contact the retailer or the LSIS customer service center.
NTC Open	The ambient temperature is too low.	Keep the ambient temperature above -10 ℃.

Type	Cause	Remedy
	There is a fault with the internal temperature sensor.	Contact the retailer or the LSIS customer service center.
Fan Lock / In Fan	A foreign object is obstructing the fan's air vent.	Remove the foreign object from the air inlet or outlet.
	The cooling fan needs to be replaced.	Replace the cooling fan.

9.3 Troubleshooting Other Faults

When a fault other than those identified as fault trips or warnings occurs, refer to the following table for possible causes and remedies.

Type	Cause	Remedy
Parameters cannot be set.	The inverter is in operation (driving mode).	Stop the inverter to change to program mode and set the parameter.
	The parameter access is incorrect.	Check the correct parameter access level and set the parameter.
	The password is incorrect.	Check the password, disable the parameter lock and set the parameter.
	Low voltage is detected.	Check the power input to resolve the low voltage and set the parameter.
The motor does not rotate.	The frequency command source is set incorrectly.	Check the frequency command source setting.
	The operation command source is set incorrectly.	Check the operation command source setting.
	Power is not supplied to the terminal R/S/T.	Check the terminal connections R/S/T and U/V/W.
	The charge lamp is turned off.	Turn on the inverter.
	The operation command is off.	Turn on the operation command. (RUN).
	The motor is locked.	Unlock the motor or lower the load

Type	Cause	Remedy
		level.
	The load is too high.	Operate the motor independently.
	An emergency stop signal is input.	Reset the emergency stop signal.
	The wiring for the control circuit terminal is incorrect.	Check the wiring for the control circuit terminal.
	The input option for the frequency command is incorrect.	Check the input option for the frequency command.
	The input voltage or current for the frequency command is incorrect.	Check the input voltage or current for the frequency command.
	The PNP/NPN mode is selected incorrectly.	Check the PNP/NPN mode setting.
	The frequency command value is too low.	Check the frequency command and input a value above the minimum frequency.
	The [OFF] key is pressed.	Check that the stop state is normal, if so resume operation normally.
	Motor torque is too low.	Increase the volume of the torque boost. If the fault remains, replace the inverter with a model with increased capacity.
The motor rotates in the opposite direction to the command.	The wiring for the motor output cable is incorrect.	Determine if the cable on the output side is wired correctly to the phase (U/V/W) of the motor.
	The signal connection between the control circuit terminal (forward/reverse rotation) of the inverter and the forward/reverse rotation signal on the control panel side is incorrect.	Check the forward/reverse rotation wiring.
The motor only rotates in one direction.	Reverse rotation prevention is selected.	Remove the reverse rotation prevention.
	The reverse rotation signal is not provided, even when a 3-wire sequence is selected.	Check the input signal associated with the 3-wire operation and adjust as necessary.
The motor is	The load is too heavy.	Reduce the load.

Type	Cause	Remedy
overheating.		Increase the Acc/Dec time.
		Check the motor parameters and set the correct values.
		Replace the motor and the inverter with models with appropriate capacity for the load.
	The ambient temperature of the motor is too high.	Lower the ambient temperature of the motor.
	The phase-to-phase voltage of the motor is insufficient.	Use a motor that can withstand phase-to-phase voltages surges greater than the maximum surge voltage.
		Only use motors suitable for applications with inverters.
		Connect the AC reactor to the inverter output (set the carrier frequency to 3 kHz).
	The motor fan has stopped or the fan is obstructed with debris.	Check the motor fan and remove any foreign objects.
The motor stops during acceleration.	The load is too high.	Reduce the load.
		Increase the volume of the torque boost.
		Replace the motor and the inverter with models with capacity appropriate for the load.
	The current is too big.	If the output current exceeds the rated load, decrease the torque boost.
The motor stops when connected to load.	The load is too high.	Reduce the load.
		Replace the motor and the inverter with models with capacity appropriate for the load.
The motor does	The frequency command value is low.	Set an appropriate value.

Type	Cause	Remedy
not accelerate. /The acceleration time is too long.	The load is too high.	Reduce the load and increase the acceleration time. Check the mechanical brake status.
	The acceleration time is too long.	Change the acceleration time.
	The combined values of the motor properties and the inverter parameter are incorrect.	Change the motor related parameters.
	The stall prevention level during acceleration is low.	Change the stall prevention level.
	The stall prevention level during operation is low.	Change the stall prevention level.
Motor speed varies during operation.	There is a high variance in load.	Replace the motor and inverter with models with increased capacity.
	The input voltage varies.	Reduce input voltage variation.
	Motor speed variations occur at a specific frequency.	Adjust the output frequency to avoid a resonance area.
The motor rotation is different from the setting.	The V/F pattern is set incorrectly.	Set a V/F pattern that is suitable for the motor specification.
The motor deceleration time is too long even with Dynamic Braking (DB) resistor connected.	The deceleration time is set too long.	Change the setting accordingly.
	The motor torque is insufficient.	If motor parameters are normal, it is likely to be a motor capacity fault. Replace the motor with a model with increased capacity.
	The load is higher than the internal torque limit determined by the rated current of the inverter.	Replace the inverter with a model with increased capacity.
While the inverter is in operation, a control unit malfunctions or noise occurs.	Noise occurs due to switching inside the inverter.	Change the carrier frequency to the minimum value.
		Install a micro surge filter in the inverter output.

Type	Cause	Remedy
When the inverter is operating, the earth leakage breaker is activated.	An earth leakage breaker will interrupt the supply if current flows to ground during inverter operation.	Connect the inverter to a ground terminal.
		Check that the ground resistance is less than 100Ω for 200 V inverters and less than 10Ω for 400 V inverters.
		Check the capacity of the earth leakage breaker and make the appropriate connection, based on the rated current of the inverter.
		Lower the carrier frequency.
		Make the cable length between the inverter and the motor as short as possible.
The motor vibrates severely and does not rotate normally.	Phase-to-phase voltage of 3-phase power source is not balanced.	Check the input voltage and balance the voltage.
		Check and test the motor's insulation.
The motor makes humming, or loud noises.	Resonance occurs between the motor's natural frequency and the carrier frequency.	Slightly increase or decrease the carrier frequency.
	Resonance occurs between the motor's natural frequency and the inverter's output frequency.	Slightly increase or decrease the carrier frequency.
		Use the frequency jump function to avoid the frequency band where resonance occurs.
The motor vibrates/hunts.	The frequency input command is an external, analog command.	In situations of noise inflow on the analog input side that results in command interference, change the input filter time constant (IN-07).
	The wiring length between the inverter and the motor is too long.	Ensure that the total cable length between the inverter and the motor is less than 200 m (50 m for motors rated 3.7 kW or lower).
The motor does	It is difficult to decelerate sufficiently,	Adjust the DC braking parameter.

not come to a complete stop when the inverter output stops.	because DC braking is not operating normally.	Increase the set value for the DC braking current.
		Increase the set value for the DC braking stopping time.
The output frequency does not increase to the frequency reference.	The frequency reference is within the jump frequency range.	Set the frequency reference higher than the jump frequency range.
	The frequency reference is exceeding the upper limit of the frequency command.	Set the upper limit of the frequency command higher than the frequency reference.
	Because the load is too heavy, the stall prevention function is working.	Replace the inverter with a model with increased capacity.
The cooling fan does not rotate.	The control parameter for the cooling fan is set incorrectly.	Check the control parameter setting for the cooling fan.

www.nicsanat.com
021-87700210
NIC SANAT
نیک صنعت

www.nicsanat.com
021-87700210
NIC SANAT
نیک صنعت

10 Maintenance

This chapter explains how to replace the cooling fan, the regular inspections to complete, and how to store and dispose of the product. An inverter is vulnerable to environmental conditions and faults also occur due to component wear and tear. To prevent breakdowns, please follow the maintenance recommendations in this section.

Caution

- Before you inspect the product, read all safety instructions contained in this manual.
- Before you clean the product, ensure that the power is off.
- Clean the inverter with a dry cloth. Cleaning with wet cloths, water, solvents, or detergents may result in electric shock or damage to the product .

10.1 Regular Inspection Lists

10.1.1 Daily Inspection

Inspection area	Inspection item	Inspection details	Inspection method	Inspection standard	Inspection equipment
All	Ambient environment	Is the ambient temperature and humidity within the design range, and is there any dust or foreign objects present?	Refer to *1.3 Installation Considerations* on page *10*	No icing (ambient temperature: -10 - +50) and no condensation (ambient humidity below 95%)	Thermometer, hygrometer, recorder
	Inverter	Is there any abnormal vibration or noise?	Visual inspection	No abnormality	
	Power voltage	Is the input and output voltages normal?	Measure voltages between R/ S/ T-	Refer to *11.1 Input and Output Specifications* on	Digital multimeter tester

Inspection area	Inspection item	Inspection details	Inspection method	Inspection standard	Inspection equipment
			phases in. the inverter terminal block.	page 585	
Input/Output circuit	Smoothing capacitor	Is there any leakage from the inside?	Visual inspection	No abnormality	-
		Is the capacitor swollen?			
Cooling system	Cooling fan	Is there any abnormal vibration or noise?	Turn off the system and check operation by rotating the fan manually.	Fan rotates smoothly	-
Display	Measuring device	Is the display value normal?	Check the display value on the panel.	Check and manage specified values.	Voltmeter, ammeter, etc.
Motor	All	Is there any abnormal vibration or noise?	Visual inspection	No abnormality	-
		Is there any abnormal smell?	Check for overheating or damage.		

10.1.2 Annual Inspection

Inspection area	Inspection item	Inspection details	Inspection method	Judgment standard	Inspection equipment
Input/Output circuit	All	Megger test (between input/output terminals and earth terminal)	Disconnect inverter and short R/S/T/U/V/W terminals, and then measure from each	Must be above 5 MΩ	DC 500 V Megger

Inspection area	Inspection item	Inspection details	Inspection method	Judgment standard	Inspection equipment
			terminal to the ground terminal using a Megger.		
		Is there anything loose in the device?	Tighten all screws.	No abnormality	
		Is there any evidence of parts overheating?	Visual inspection		
	Cable connections	Are there any corroded cables?	Visual inspection	No abnormality	-
		Is there any damage to cable insulation?			
	Terminal block	Is there any damage?	Visual inspection	No abnormality	-
	Smoothing condenser	Measure electrostatic capacity.	Measure with capacity meter.	Rated capacity over 85%	Capacity meter
	Relay	Is there any chattering noise during operation?	Visual inspection	No abnormality	-
		Is there any damage to the contacts?	Visual inspection		
	Braking resistor	Is there any damage from resistance?	Visual inspection	No abnormality	Digital multimeter / analog tester
		Check for disconnection.	Disconnect one side and measure with a tester.	Must be within ±10% of the rated value of the resistor.	
Control circuit	Operation check	Check for output voltage imbalance	Measure voltage	Balance the voltage	Digital multimeter or

Inspection area	Inspection item	Inspection details	Inspection method	Judgment standard	Inspection equipment
Protection circuit		while the inverter is in operation.	between the inverter output terminal U/V/W.	between phases: within 4 V for 200 V series and within 8 V for 400 V series.	DC voltmeter
		Is there an error in the display circuit after the sequence protection test?	Test the inverter output protection in both short and open circuit conditions.	The circuit must work according to the sequence.	
Cooling system	Cooling fan	Are any of the fan parts loose?	Check all connected parts and tighten all screws.	No abnormality	-
Display	Display device	Is the display value normal?	Check the command value on the display device.	Specified and managed values must match.	Voltmeter, Ammeter, etc.

10.1.3 Bi-annual Inspection

Inspection area	Inspection item	Inspection details	Inspection method	Judgment standard	Inspection equipment
Motor	Insulation resistance	Megger test (between the input, output and earth terminals)	Disconnect the cables for terminals U/V/W and test the wiring.	Must be above 5 MΩ	DC 500 V Megger

Caution

Do not run an insulation resistance test (Megger) on the control circuit as it may result in damage to the product.

10.2 Real Time Clock (RTC) Battery Replacement

A CR2032 Lithium-Manganese battery to power the inverter's built-in RTC (real time clock) is installed on the main PCB. When the battery charge is low, a low battery voltage level warning is given on the keypad display.

The RTC feature and any other features related to the RTC feature, such as the time event control, do not work properly when the battery runs out. Refer to the following battery specifications when a battery replacement is required.

RTC Battery Specifications

Model type: CR 2032 (lithium-manganese)

Nominal voltage: 3 V

Nominal capacity: 220 mAh

Operating temperature range: -20–80 degrees C

Life span (approximately): 53,300 hrs (inverter on) / 25,800 hrs (inverter off)

Follow the instructions below to replace the RTC battery.

Caution

ESD (Electrostatic discharge) from the human body may damage sensitive electronic components on the PCB. Therefore, be extremely careful not to touch the PCB or the components on the PCB with bare hands while you work on the main PCB.

To prevent damage to the PCB from ESD, touch a metal object with your hands to discharge any electricity before working on the PCB, or wear an anti-static wrist strap and ground it on a metal object.

1 Turn off the inverter and make sure that DC link voltage has dropped to a safe level.

2 Loosen the screw on the power cover then remove the power cover.

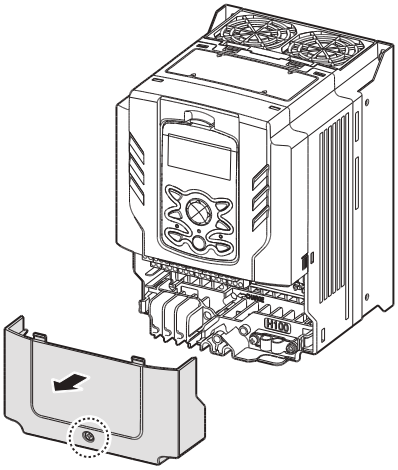

0.75–30 kW Models

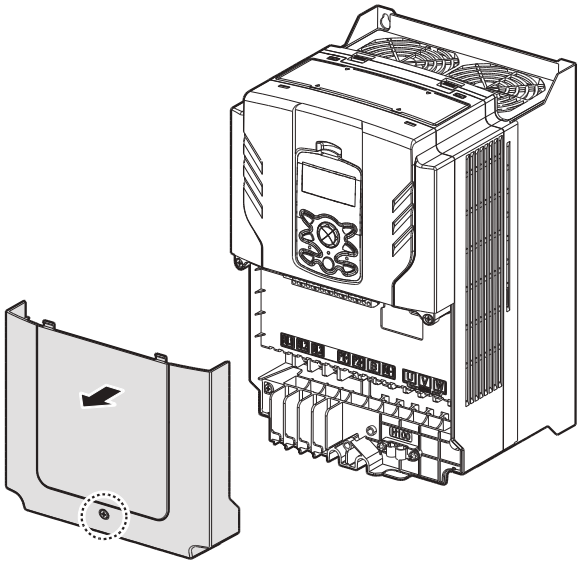

37–90 kW Models

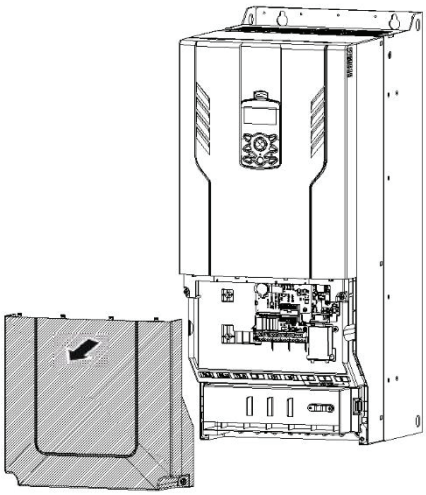

110~185kW Models

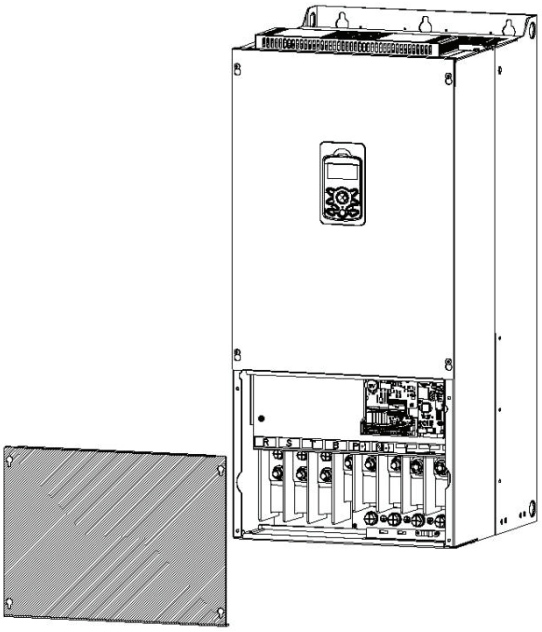

220~500kW Models

3 Remove the keypad from the inverter body.

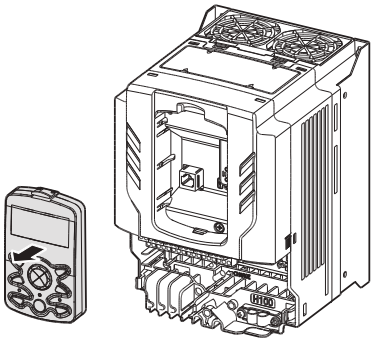

0.75–30 kW Models

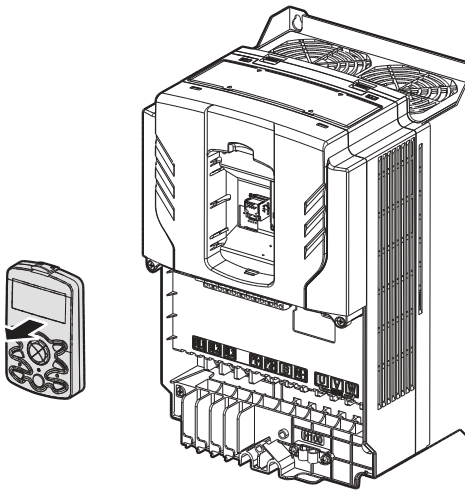

37–90 kW Models

4 Loosen the screws securing the front cover, and remove the front cover by lifting it. The main PCB is exposed.

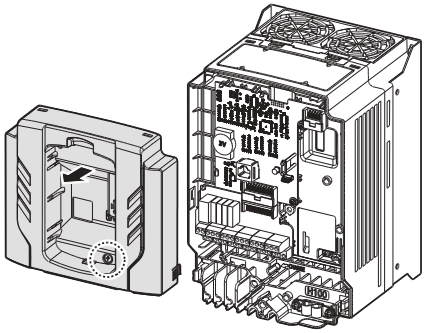

0.75–30 kW Models

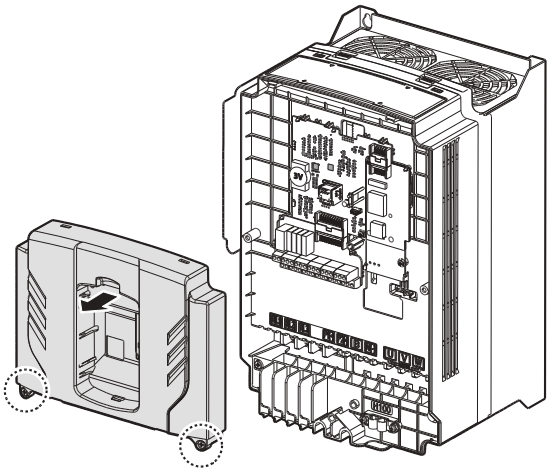

37–90 kW Models

5 Locate the RTC battery holder on the main PCB, and replace the battery.

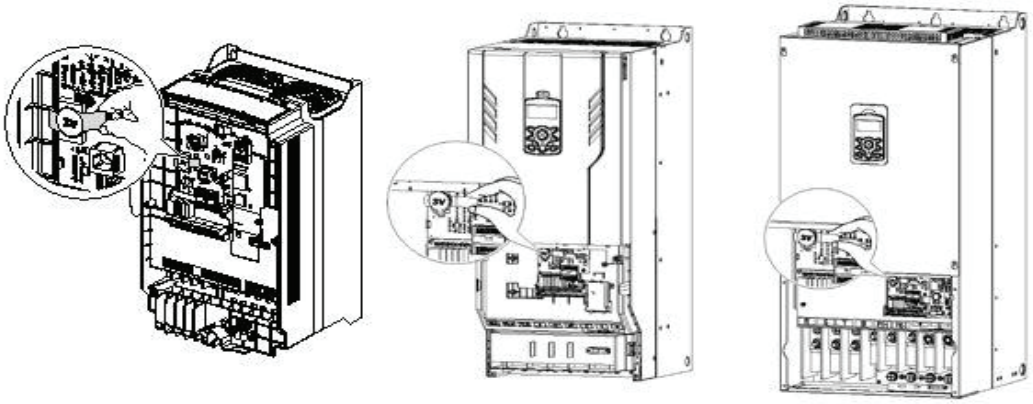

0.75-90kW Models 110-185kW Models 220-500kW Models

6 Reattach the front cover, the power cover, and the keypad back onto the inverter body

Caution

Ensure that the inverter is turned off and DC link voltage has dropped to a safe level before opening the terminal cover and installing the RTC battery.

www.nicsanat.com
021-87700210
NIC SANAT
نیک صنعت

10.3 Storage and Disposal

10.3.1 Storage

If you are not using the product for an extended period, store it in the following way:

- Store the product in the same environmental conditions as specified for operation (Refer to Installation Considerationson page 10).
- When storing the product for a period longer than 3 months, store it between -10 ˚C and 30 ˚C, to prevent depletion of the electrolytic capacitor.
- Do not expose the inverter to snow, rain, fog, or dust.
- Package the inverter in a way that prevents contact with moisture. Keep the moisture level below 70% in the package by including a desiccant, such as silica gel.
- Do not allow the inverter to be exposed to dusty or humid environments. If the inverter is installed in such environments (for example, a construction site) and the inverter will be unused for an extended period, remove the inverter and store it in a safe place.

10.3.2 Disposal

When disposing of the product, categorize it as general industrial waste. Recyclable materials are included in the product, so recycle them whenever possible. The packing materials and all metal parts can be recycled. Although plastic can also be recycled, it can be incinerated under controlled conditions in some regions.

Caution

If the inverter has not been operated for a long time, capacitors lose their charging characteristics and are depleted. To prevent depletion, turn on the product once a year and allow the device to operate for 30-60 min. Run the device under no-load conditions.

11 Technical Specification

11.1 Input and Output Specifications

Three Phase 200 V (0.75–3.7 kW)

Applied Motor		HP	1.0	2.0	3.0	5.0
		kW	0.75	1.5	2.2	3.7
Rated output	Rated Capacity (kVA)		1.9	3.0	4.5	6.1
	Rated Current (A)	Three-Phase	5	8	12	16
		Single-Phase	2.9	4.4	6.4	8.4
	Output Frequency		0–400 Hz			
	Output Voltage (V)		3-Phase 200–240 V			
Rated input	Working Voltage (V)	Three-Phase	3-Phase 200–240 VAC (-15%–+10%)			
		Single-Phase	1-Phase 240 VAC (-5%–+10%)			
	Input Frequency	Three-Phase	50–60 Hz (±5%)			
		Single-Phase	60 Hz(±5%)			
	Rated Current (A)		4.9	8.4	12.9	17.5
Weight (kg)			3.3	3.3	3.3	3.3

- The standard motor capacity is based on a standard 4-pole motor.
- The standard used for 200 V inverters is based on a 220 V supply voltage, and 400 V inverters are based on a 440 V supply voltage.
- The rated output current is limited based on the carrier frequency set at CON-04.

www.nicsanat.com
021-87700210
NIC SANAT
نیک صنعت

Three Phase 200 V (5.5–18.5 kW)

Applied Motor		HP	7.5	10	15	20	25
		kW	5.5	7.5	11	15	18.5
Rated output	Rated Capacity (kVA)		8.4	11.4	16.0	21.3	26.3
	Rated Current (A)	Three-Phase	22	30	42	56	69
		Single-Phase	11	16	23	30	37
	Output Frequency		0–400 Hz				
	Output Voltage (V)		3-Phase 200–240 V				
Rated input	Working Voltage (V)	Three-Phase	3-Phase 200–240 VAC (-15%–+10%)				
		Single-Phase	1-Phase 240 VAC (-5%–+10%)				
	Input Frequency	Three-Phase	50–60 Hz (±5%)				
		Single-Phase	60 Hz(±5%)				
	Rated Current (A)		23.7	32.7	46.4	62.3	77.2
Weight (kg)			3.3	3.3	3.3	4.6	7.1

- The standard motor capacity is based on a standard 4-pole motor.
- The standard used for 200 V inverters is based on a 220 V supply voltage, and 400 V inverters are based on a 440 V supply voltage.
- The rated output current is limited based on the carrier frequency set at CON-04.

www.nicsanat.com
021-87700210
NIC SANAT
نیک صنعت

Three Phase 400 V (0.75–3.7 kW)

Applied Motor		HP	1.0	2.0	3.0	5.0
		kW	0.75	1.5	2.2	3.7
Rated output	Rated Capacity (kVA)		1.9	3.0	4.5	6.1
	Rated Current (A)	Three-Phase	2.5	4	6	8
		Single-Phase	1.6	2.4	3.5	4.6
	Output Frequency		0–400 Hz			
	Output Voltage (V)		3-Phase 380–480 V			
Rated input	Working Voltage (V)	Three-Phase	3-Phase 380–480 VAC (-15%–+10%)			
		Single-Phase	1-Phase 480 VAC (-5%–+10%)			
	Input Frequency	Three-Phase	50–60 Hz (±5%)			
		Single-Phase	60 Hz(±5%)			
	Rated Current (A)		2.4	4.2	6.5	8.7
Weight (kg)			3.3	3.3	3.3	3.3

- The standard motor capacity is based on a standard 4-pole motor.
- The standard used for 200 V inverters is based on a 220 V supply voltage, and 400 V inverters are based on a 440 V supply voltage.
- The rated output current is limited based on the carrier frequency set at CON-04.

www.nicsanat.com
021-87700210
NIC SANAT
نیک صنعت

Three Phase 400 V (5.5–22 kW)

Applied Motor		HP	7.5	10	15	20	25	30
		kW	5.5	7.5	11	15	18.5	22
Rated output	Rated Capacity(kVA)		9.1	12.2	18.3	23.0	29.0	34.3
	Rated Current(A)	Three-Phase	12	16	24	30	38	45
		Single-Phase	6.8	9.2	14	17	22	26
	Output Frequency		0–400 Hz					
	Output Voltage(V)		3-Phase 380–480 V					
Rated input	Working Voltage(V)	Three-Phase	3-Phase 380–480 VAC (-15%–+10%)					
		Single-Phase	1-Phase 480 VAC (-5%–+10%)					
	Input Frequency	Three-Phase	50–60 Hz (±5%)					
		Single-Phase	60 Hz(±5%)					
	Rated Current(A)		12.2	17.5	26.5	33.4	42.5	50.7
Weight(kg)			3.3	3.3	3.4	4.6	4.8	7.5

- The standard motor capacity is based on a standard 4-pole motor.
- The standard used for 200 V inverters is based on a 220 V supply voltage, and 400 V inverters are based on a 440 V supply voltage.
- The rated output current is limited based on the carrier frequency set at CON-04.

www.nicsanat.com
021-87700210
NIC SANAT
نیک صنعت

Three Phase 400 V (30.0–90.0 kW)

Applied Motor		HP	40	50	60	75	100	125
		kW	30	37	45	55	75	90
Rated output	Rated Capacity (kVA)		46.5	57.1	69.4	82.0	108.2	128.8
	Rated Current (A)	Three-Phase	61	75	91	107	142	169
		Single-Phase	36	39	47	55	73	86
	Output Frequency		0–400 Hz					
	Output Voltage (V)		3-Phase 380–480 V					
Rated input	Working Voltage (V)	Three-Phase	3-Phase 380–480 VAC (-15%–+10%)					
		Single-Phase	1-Phase 480 VAC (-5%–+10%)					
	Input Frequency	Three-Phase	50–60 Hz (±5%)					
		Single-Phase	60 Hz(±5%)					
	Rated Current (A)		69.1	69.3	84.6	100.1	133.6	160.0
Weight (kg)			7.5	26	35	35	43	43

- The standard motor capacity is based on a standard 4-pole motor.
- The standard used for 200 V inverters is based on a 220 V supply voltage, and 400 V inverters are based on a 440 V supply voltage.
- The rated output current is limited based on the carrier frequency set at CON-04.

www.nicsanat.com
021-87700210
NIC SANAT
نیک صنعت

Three Phase 400 V (110.0–500.0 kW)

Applied Motor		HP	150	200	250	300	350	400	500	550	650	800
		kW	110	132	160	185	220	250	315	355	400	500
Rated output	Rated Capacity (kVA)		170	201	248	282	329	367	467	520	587	733
	Rated Current (A)	Three Phase	223	264	325	370	432	481	613	683	770	962
	Output Frequency		0–400 Hz									
	Output Voltage (V)		3-Phase 380–500 V									
Rated input	Working Voltage (V)	Three Phase	3-Phase 380–500VAC (-15%–+10%)									
	Input Frequency	Three Phase	50–60 Hz (±5%)									
	Rated Current (A)		215.1	254.6	315.3	358.9	419.1	469.3	598.1	666.4	751.3	938.6
Weight (kg)			55.8	55.8	74.7	74.7	120.0	120.0	185.5	185.5	185.5	265

- The standard motor capacity is based on a standard 4-pole motor.
- The standard used for 200 V inverters is based on a 220 V supply voltage, and 400 V inverters are based on a 440 V supply voltage.
- The rated output current is limited based on the carrier frequency set at CON-04.

www.nicsanat.com
021-87700210
NIC SANAT
نیک صنعت

11.2 Product Specification Details

Items			Description	
Control	Control method		V/F control, Slip compensation.	
	Frequency settings power resolution		Digital command: 0.01 Hz Analog command: 0.06 Hz (60 Hz standard)	
	Frequency accuracy		1% of maximum output frequency.	
	V/F pattern		Linear, square reduction, user V/F.	
	Overload capacity		0.75~90kW	Rated current: 120% 1 min.
			110~500kW	Rated current: 110% 1 min.
	Torque boost		Manual torque boost, automatic torque boost.	
Operation	Operation type		Select key pad, terminal strip, or communication operation.	
	Frequency settings		Analog type: -10–10 V, 0–10 V, 0–20 mA Digital type: key pad, pulse train input	
	Operation function		PID control 3-wire operation Frequency limit Second function Anti-forward and reverse direction rotation Commercial transition Speed search Power braking Leakage reduction	Up-down operation DC braking Frequency jump Slip compensation Automatic restart Automatic tuning Energy buffering Flux braking Energy Saving
	Input	Multi function terminal	Select PNP (Source) or NPN (Sink) mode. Functions can be set according to IN-65- IN-71 codes and parameter settings.	

Items			Description	
		(7EA) P1-P7	Forward direction operation Reset Emergency stop Multi step speed frequency-high/med/low DC braking during stop Frequency increase 3-wire Select acc/dec/stop MMC Interlock	Reverse direction operation External trip Jog operation Multi step acc/dec-high/med/low Second motor selection Frequency reduction Fix analog command frequency Transtion from PID to general operation Pre Heat Pump Cleaning RTC(Time Event)
		Pulse train	0–32 kHz, Low Level: 0–0.8 V, High Level: 3.5–12 V	
	Output	Multi function open collector terminal	Fault output and inverter operation status output	Less than DC 26 V, 50 mA
		Fault signal relay terminal		N.O.: Less than AC 250 V 2A, DC 30 V, 3A N.C.: Less than AC 250 V 1A, DC 30 V 1A
		Multi function relay terminal		Less than AC 250 V, 5 A Less than DC 30 V, 5 A
		Analog output	0–12 Vdc(0–20 mA): Select frequency, output current, output voltage, DC terminal voltage, and others.	
		Pulse train	Maximum 32 kHz, 0–12 V	

Items		Description	
Protection function	Trip	Over current trip External signal trip ARM short circuit current trip Over heat trip Input imaging trip Ground trip Motor over heat trip I/O board link trip No motor trip Parameter writing trip Emergency stop trip Command loss trip External memory error CPU watchdog trip Motor under load trip	Over voltage trip Temperature sensor trip Inverter over heat Option trip Output imaging trip Inverter overload trip Fan trip Low voltage trip during operation Low voltage trip Analog input error Motor overload trip Pipe broken trip Keypad command lost trip Damper trip Level Detect trip MMC Interlock trip PumpCleannig trip
	Alarm	Command loss trip alarm, overload alarm, normal load alarm, inverter overload alarm, fan operation alarm, resistance braking rate alarm, Capacitor life alarm, Pump Clean alarm, Fire Mode Alarm, LDT Alarm.	
	Instantaneous blackout	Less than 8 ms: Continue Operation (must be within the rated input voltage and rated output range) More than 8 ms: Auto restart operation	
Structure/ working environment	Cooling type	Forced fan cooling structure	
	Protection structure	IP 20(0.75~185kW), IP 00(220~500kW) UL Open & Enclosed Type 1 (option) (UL Enclosed Type 1 is satisfied by conduit installation	

		option.)
	Ambient temperature	-10 ℃–50 ℃ (2.5% current derating is applied above 40 ℃) No ice or frost should be present. Working under normal load at 50 ℃ (122 °F), it is recommended that less than 75% load is applied.
	Ambient humidity	Relative humidity less than 95% RH (to avoid condensation forming)
	Storage temperature.	-20 °C-65 °C (-4–149 °F)
	Surrounding environment	Prevent contact with corrosive gases, inflammable gases, oil stains, dust, and other pollutants. (0.75~90kW Pollution Degree 3 Environment) (110~500kW Pollution Degree 2 Environment)
	Operation altitude	Maximum 3,280 ft (1,000m) above sea level for standard operation. After that the driver rated voltage and the rated output current derating by 1% for every extra 328 ft (100m) up to 13,123 ft (4,000m).
	Operation oscillation	Less than 1.0 G (9.8 m/sec^2).
	Pressure	70-106 kPa

www.nicsanat.com
021-87700210
NIC SANAT
نیک صنعت

11.3 External Dimensions

0.75–30 kW (3-phase)

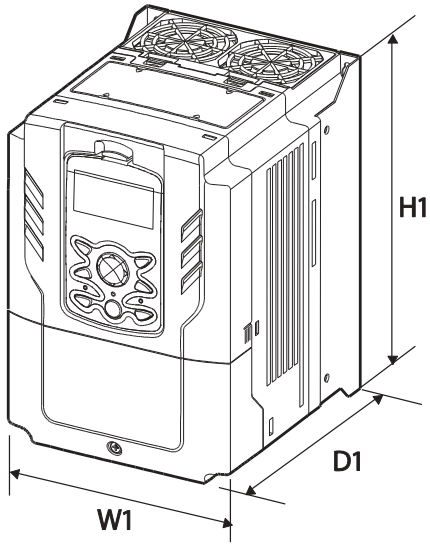

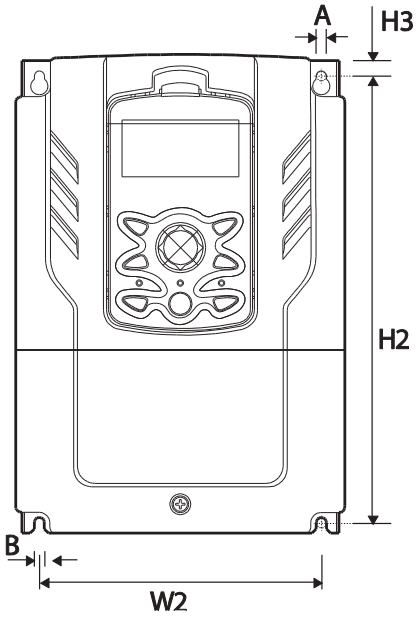

37–90 kW (3-phase)

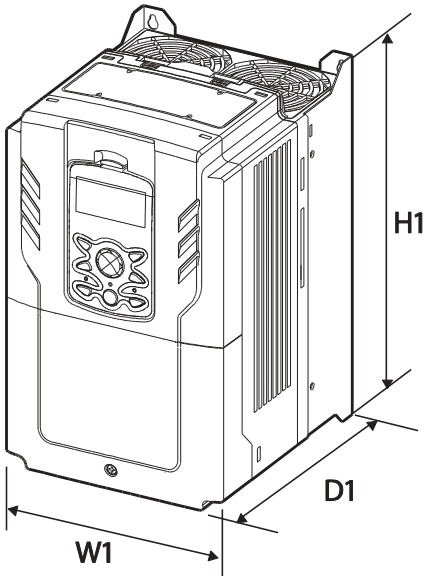

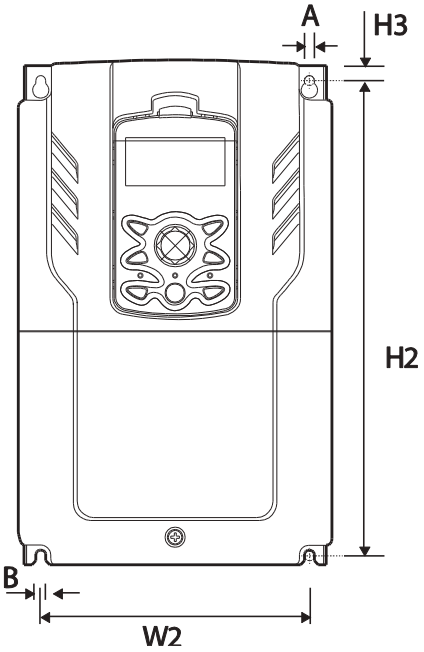

110–185 kW (3-phase)

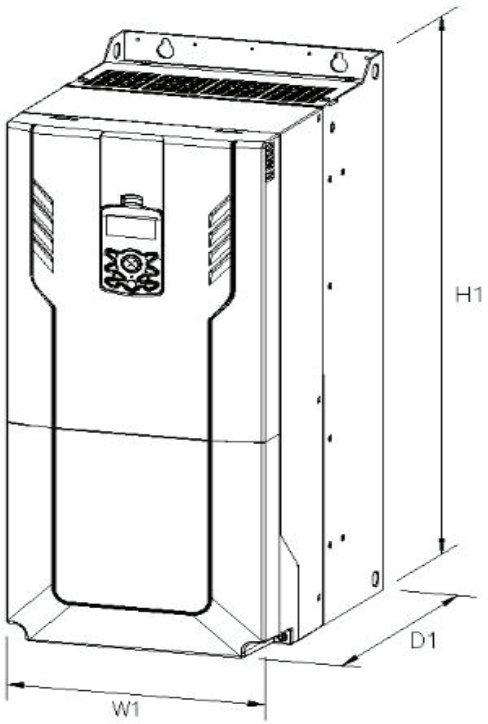

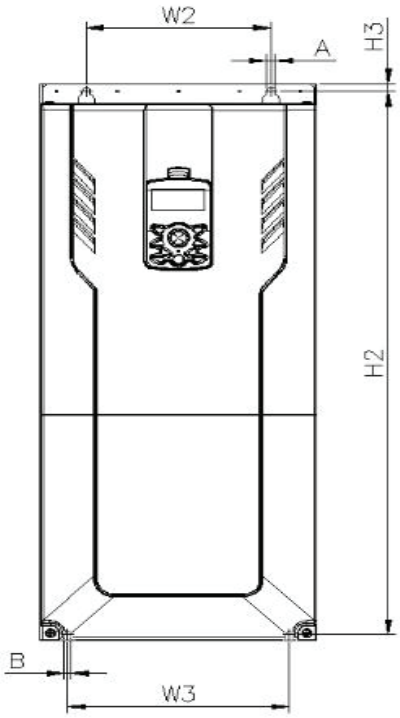

www.nicsanat.com
021-87700210
NIC SANAT
نیک صنعت

220–500 kW (3-phase)

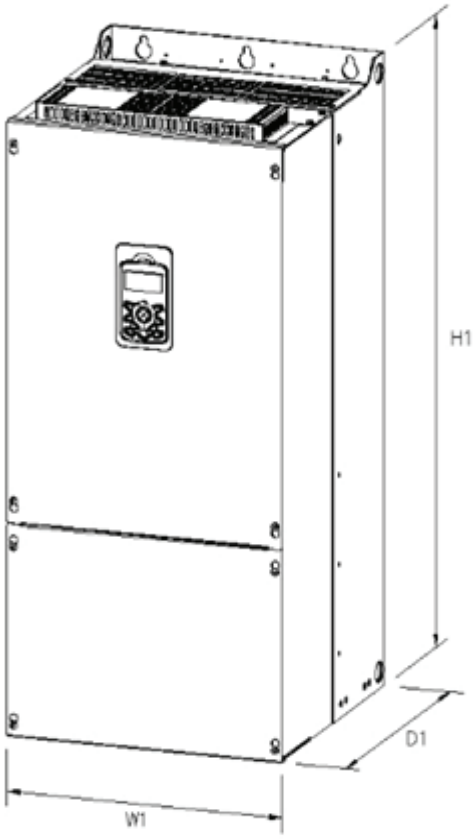

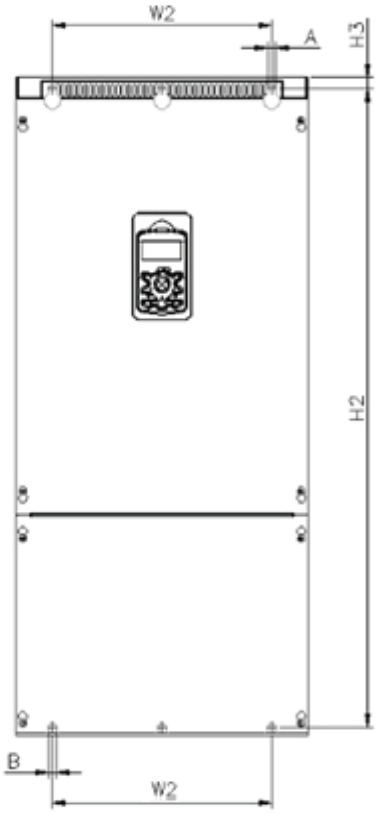

Units: mm

Items		W1	W2	W3	H1	H2	H3	D1	A	B	Φ
3-phase 200 V	0008H100-2	160	137	-	232	216.5	10.5	181	5	5	-
	0015H100-2	160	137	-	232	216.5	10.5	181	5	5	-
	0022H100-2	160	137	-	232	216.5	10.5	181	5	5	-
	0037H100-2	160	137	-	232	216.5	10.5	181	5	5	-
	0055H100-2	160	137	-	232	216.5	10.5	181	5	5	-
	0075H100-2	160	137	-	232	216.5	10.5	181	5	5	-
	0110H100-2	160	137	-	232	216.5	10.5	181	5	5	-
	0150H100-2	180	157	-	290	273.7	11.3	205.3	5	5	-
	0185H100-2	220	193.8	-	350	331	13	223.2	6	6	-

Items		W1	W2	W3	H1	H2	H3	D1	A	B	Φ
3-phase 400 V	0008H100-4	160	137	-	232	216.5	10.5	181	5	5	-
	0015H100-4	160	137	-	232	216.5	10.5	181	5	5	-
	0022H100-4	160	137	-	232	216.5	10.5	181	5	5	-
	0037H100-4	160	137	-	232	216.5	10.5	181	5	5	-
	0055H100-4	160	137	-	232	216.5	10.5	181	5	5	-
	0075H100-4	160	137	-	232	216.5	10.5	181	5	5	-
	0110H100-4	160	137	-	232	216.5	10.5	181	5	5	-
	0150H100-4	180	157	-	290	273.7	11.3	205.3	5	5	-
	0185H100-4	180	157	-	290	273.7	11.3	205.3	5	5	-
	0220H100-4	220	193.8	-	350	331	13	223.2	6	6	-
	0300H100-4	220	193.8	-	350	331	13	223.2	6	6	-
	0370H100-4	275	232	-	450	428.5	14	284	7	7	-
	0450H100-4	325	282	-	510	486.5	16	284	7	7	-
	0550H100-4	325	282	-	510	486.5	16	284	7	7	-
	0750H100-4	325	275	-	550	524.5	16	309	9	9	-
	0900H100-4	325	275	-	550	524.5	16	309	9	9	-
	1100H100-4	300	200	240	706	688.5	9.5	386	9	9	-
	1320H100-4	300	200	240	706	688.5	9.5	386	9	9	-
	1600H100-4	380	300	300	705	685.5	9.5	396	9	9	-
	1850H100-4	380	300	300	705	685.5	9.5	396	9	9	-
	2200H100-4	440	320	-	922.3	895.5	15.5	440	11	11	-
	2500H100-4	440	320	-	922.3	895.5	15.5	440	11	11	-
	3150H100-4	600	420	-	1000	972	15	500	14	14	-
	3550H100-4	600	420	-	1000	972	15	500	14	14	-
	4000H100-4	600	420	-	1000	972	15	500	14	14	-
	5000H100-4	776	500	-	1054	1021	20	500	14	14	-

Units : inches

Items		W1	W2	W3	H1	H2	H3	D1	A	B	Φ
3-phase 200 V	0008H100-2	6.30	5.39	-	9.13	8.52	0.41	7.13	0.20	0.20	-
	0015H100-2	6.30	5.39	-	9.13	8.52	0.41	7.13	0.20	0.20	-
	0022H100-2	6.30	5.39	-	9.13	8.52	0.41	7.13	0.20	0.20	-
	0037H100-2	6.30	5.39	-	9.13	8.52	0.41	7.13	0.20	0.20	-
	0055H100-2	6.30	5.39	-	9.13	8.52	0.41	7.13	0.20	0.20	-
	0075H100-2	6.30	5.39	-	9.13	8.52	0.41	7.13	0.20	0.20	-
	0110H100-2	6.30	5.39	-	9.13	8.52	0.41	7.13	0.20	0.20	-
	0150H100-2	7.09	6.18	-	11.42	10.78	0.45	8.08	0.20	0.20	-
	0185H100-2	8.66	7.63	-	13.78	13.03	0.51	8.79	0.24	0.24	-
3-Phase 400 V	0008H100-4	6.30	5.39	-	9.13	8.52	0.41	7.13	0.20	0.20	-
	0015H100-4	6.30	5.39	-	9.13	8.52	0.41	7.13	0.20	0.20	-
	0022H100-4	6.30	5.39	-	9.13	8.52	0.41	7.13	0.20	0.20	-
	0037H100-4	6.30	5.39	-	9.13	8.52	0.41	7.13	0.20	0.20	-
	0055H100-4	6.30	5.39	-	9.13	8.52	0.41	7.13	0.20	0.20	-
	0075H100-4	6.30	5.39	-	9.13	8.52	0.41	7.13	0.20	0.20	-
	0110H100-4	6.30	5.39	-	9.13	8.52	0.41	7.13	0.20	0.20	-
	0150H100-4	7.09	6.18	-	11.42	10.78	0.45	8.08	0.20	0.20	-
	0185H100-4	7.09	6.18	-	11.42	10.78	0.45	8.08	0.20	0.20	-
	0220H100-4	8.66	7.63	-	13.78	13.03	0.51	8.79	0.24	0.24	-
	0300H100-4	8.66	7.63	-	13.78	13.03	0.51	8.79	0.24	0.24	-
	0370H100-4	10.83	9.13	-	17.72	16.87	0.55	11.18	0.28	0.28	-
	0450H100-4	12.80	11.10	-	20.08	19.15	0.63	11.18	0.28	0.28	-
	0550H100-4	12.80	11.10	-	20.08	19.15	0.63	11.18	0.28	0.28	-
	0750H100-4	12.80	10.83	-	21.65	20.65	0.63	12.17	0.35	0.35	-
	0900H100-4	12.80	10.83	-	21.65	20.65	0.63	12.17	0.35	0.35	-
	1100H100-4	11.81	7.87	9.45	27.80	27.11	0.37	15.20	0.35	0.35	-

Items		W1	W2	W3	H1	H2	H3	D1	A	B	Φ
	1320H100-4	11.81	7.87	9.45	27.80	27.11	0.37	15.20	0.35	0.35	-
	1600H100-4	14.96	11.81	11.81	27.76	26.99	0.37	15.59	0.35	0.35	-
	1850H100-4	14.96	11.81	11.81	27.76	26.99	0.37	15.59	0.35	0.35	-
	2200H100-4	17.32	12.60	-	36.31	35.26	0.61	17.32	0.43	0.43	-
	2500H100-4	17.32	12.60	-	36.31	35.26	0.61	17.32	0.43	0.43	-
	3150H100-4	23.62	16.54	-	39.37	38.27	0.59	19.69	0.55	0.55	-
	3550H100-4	23.62	16.54	-	39.37	38.27	0.59	19.69	0.55	0.55	-
	4000H100-4	23.62	16.54	-	39.37	38.27	0.59	19.69	0.55	0.55	-
	5000H100-4	30.55	19.69	-	41.50	40.20	0.79	19.69	0.55	0.55	-

11.4 Peripheral Devices

Compatible Circuit Breaker, Leakage Breaker and Magnetic Contactor Models (manufactured by LSIS)

Product (kW)		Circuit Breaker				Leakage Breaker		Magnetic Contactor	
		Model	Rated Current	Model	Rated Current	Model	Rated Current	Model	Rated Current
3-Phase 200 V	0.75	ABS33c	15	UTE100	15	EBS33c	15	MC-9a	11
	1.5		15		15		15	MC-18a	18
	2.2		30		15		30	MC-32a	32
	3.7		30		15		30	MC-32a	32
	5.5	ABS53c	50	UTE100	50	EBS53c	50	MC-50a	55
	7.5	ABS63c	60		60	EBS63c	60	MC-65a	65
	11	ABS103c	100		100	EBS103c	100	MC-85a	85
	15		100		100			MC-130a	130
	18.5	ABS203c	150	UTS150	150	EBS203c	200	MC-150a	150
3-Phase	0.75	ABS33c	10	UTE100	15	EBS33C	10	MC-6a	9

Product (kW)		Circuit Breaker				Leakage Breaker		Magnetic Contactor	
		Model	Rated Current	Model	Rated Current	Model	Rated Current	Model	Rated Current
400 V	1.5		10		15		10	MC-6a	9
	2.2		15		15		15	MC-9a	11
	3.7		15		15		15	MC-12a	13
	5.5	ABS53c	50	UTE100	50	EBS33C	30	MC-22b	22
	7.5		50		50		30	MC-32a	32
	11	ABS63c	60		60	EBS53c	50	MC-50a	50
	15	ABS63c	60		80	EBS63c	60	MC-65a	65
	18.5	ABS103c	100		100	EBS103c	100	MC-85a	85
	22	ABS103c	125	UTS150	125		125	MC-100a	105
	30	ABS103c	125		125		125	MC-130a	130
	37	ABS203c	175	UTS250	175	EBS203c	200	MC-150a	150
	45	ABS203c	225		225		225	MC-185a	185
	55	ABS203c	250		250		250	MC-185a	185
	75	ABS403c	300	UTS400	300	EBS403C	300	MC-225a	225
	90	ABS403c	350		350		350	MC-330a	330
	110	ABS603c	500	UTS600	500	EBS603c	500	MC-400a	400
	132	ABS603c	600		600	EBS603c	630	MC-400a	400
	160	ABS603c	630		600	EBS603c	630	MC-630a	630
	185	ABS803c	800	UTS800	800	EBS803c	800	MC-630a	630
	220	ABS803c	800		800	EBS803c	800	MC-800a	800
	250	ABS1003c	1000		800	EBS1003b	1000	MC-800a	800
	315	ABS1203b	1200	UTS1200	1200	EBS1203b	1200	1200a	1200
	355	ABS1203b	1200		1200	EBS1203b	1200	1200a	1200
	400	-	1600	-	1600				
	500	-	1600	-	1600				
3-Phase	110	ABS603c	500	UTS600	500	EBS603c	500	MC-400a	400
	132	ABS603c	600		600	EBS603c	630	MC-400a	400

Product (kW)		Circuit Breaker				Leakage Breaker		Magnetic Contactor	
		Model	Rated Current	Model	Rated Current	Model	Rated Current	Model	Rated Current
500V	160	ABS603c	630		600	EBS603c	630	MC-630a	630
	185	ABS803c	800	UTS800	800	EBS803c	800	MC-630a	630
	220	ABS803c	800		800	EBS803c	800	MC-800a	800
	250	ABS803c	800		800	EBS803c	800	MC-800a	800
	315	ABS1203b	1200	UTS1200	1200	EBS1203c	1200	1200a	1200
	355	ABS1203b	1200		1200	EBS1203c	1200	1200a	1200
	400	-	1600	-	1600	-	-	-	-
	500	-	1600	-	1600	-	-	-	-

* In the case of inverter 400/500 kW, there is no Circuit Brake capacity qualified as UL standard.
* If you want to use UL Type products, please use that ACB product.

Maximum allowed prospective short-circuit current at the input power connection is defined in IEC 60439-1 as 100 kA. LSLV-H100 is suitable for use in a circuit capable of delivering not more than 100kA RMS at the drive's maximum rated voltage, depending on the selected MCCB. RMS symmetrical amperes for recommended MCCB are the following table.

Working Voltage	UTE100 (E/N)	UTS150 (N/H/L)	UTS250 (N/H/L)	UTS400 (N/H/L)
240V(50/60Hz)	50/65kA	65/100/150kA	65/100/150kA	65/100/150kA
480V(50/60Hz)	25/35kA	35/65/100kA	35/65/100kA	35/65/100kA

Working Voltage	ABS33c	ABS53c	ABS63c	ABS103c	ABS203c	ABS403c
240V(50/60Hz)	30kA	35kA	35kA	85kA	85kA	75kA
480V(50/60Hz)	7.5kA	10kA	10kA	26kA	26kA	35kA

11.5 Fuse and Reactors Specifications

Products(kW)		AC Input Fuse		AC reactor		DC Reactor	
		Current (A)	Voltage (V)	Inductance (mH)	Current (A)	Inductance (mH)	Current (A)
3-Phase 200 V	0.75	10	600[V]	2.02	5	4.04	5
	1.5	10		1.26	8	2.53	8
	2.2	15		0.78	12	1.68	12
	3.7	20		0.59	16	1.26	16
	5.5	50		0.43	24	0.93	25
	7.5	63		0.31	33	0.73	32
	11	80		0.22	46	0.53	50
	15	100		0.16	62	0.32	62
	18.5	125		0.13	77	0.29	80
3-Phase 400 V	0.75	10		8.09	2.5	16.17	3
	1.5	10		5.05	4	10.11	4
	2.2	15		3.37	6	6.74	6
	3.7	20		2.25	9	5.05	8
	5.5	32		1.56	13	3.56	13
	7.5	35		1.16	17	2.53	18
	11	50		0.76	27	1.64	26
	15	63		0.61	33	1.42	33
	18.5	70		0.48	43	0.98	42
	22	100		0.40	51	0.88	50
	30	125		0.29	69	0.59	68
	37			0.29	69	Built-In	
	45	160		0.24	85		
	55	200		0.20	100		
	75	250		0.15	134		
	90	350		0.13	160		

Products(kW)		AC Input Fuse		AC reactor		DC Reactor	
		Current (A)	Voltage (V)	Inductance (mH)	Current (A)	Inductance (mH)	Current (A)
	110	350		0.1	217		
	132	400		0.08	257		
	160	450		0.07	318		
	185	550		0.06	362		
	220	630		0.05	423		
	250	700		0.05	474		
	315	800		0.04	604		
	355	1000		0.03	673		
	400	1100		0.03	759		

Caution

Use Class H or RK5 UL Listed Input Fuse and UL Listed Breaker Only. See the table above for the Voltage and Current rating of the fuse and the breaker.

Attention

Utiliser UNIQUEMENT des fusibles d'entrée homologués de Classe H ou RK5 UL et des disjoncteurs UL . Se reporter au tableau ci-dessus pour la tension et le courant nominal des fusibless et des disjoncteurs.

11.6 Terminal Screw Specifications

Input/Output Termianl Screw Specification

Product (kW)		Terminal Screw Size	Screw Torque (Kgf·c m/Nm)
3-Phase 200 V	0.75	M4	7.1–12.2/0.7–1.2
	1.5		
	2.2		
	3.7		
	5.5		
	7.5		

Product (kW)		Terminal Screw Size	Screw Torque (Kgf·c m/Nm)
	11		
	15	M5	24.5~31.8/2.4~3.1
	18.5		
3-Phase 400 V	0.75	M4	7.1–12.2/0.7–1.2
	1.5		
	2.2		
	3.7		
	5.5		
	7.5		
	11		
	15	M5	24.5~31.8/2.4~3.1
	18.5		
	22		
	30		
	37	M8	61.2–91.8/6–9
	45		
	55		
	75		
	90		
	110	M10	89.7~122.0/8.8~11.96
	132		
	160	M12	182.4~215.0/17.87~21.07
	185		
	220		
	250		
	315	M8 X 2 M12 X 1	61.2–91.8/6–9 182.4~215.0/17.87~21.07
	355		
	400		
	500	M10 X 2	89.7~122.0/8.8~11.96

Product (kW)		Terminal Screw Size	Screw Torque (Kgf·c m/Nm)
		M16 X 1	490.9~511.0/48.05~50.11

Control Circuit Terminal Screw Specification

Terminal	Terminal Screw Size	Screw Torque(Kgf·cm/Nm)
P1–P7/ CM/VR/V1/I2/AO/Q1/EG/24/TI/ TO/SA,SB,SC/S+,S-,SG A1/B1/C1	M3	2.2–2.5/0.22–0.25

Caution

Apply rated torques to the terminal screws. Loose screws may cause short circuits and malfunctions. Tightening the screw too much may damage the terminals and cause short circuits and malfuctions. Use copper wires only with 600 V, 90 ℃ rating for the power terminal wiring, and 300 V, 75 ℃ rating for the control terminal wiring.

Attention

Appliquer des couples de marche aux vis des bornes. Des vis desserrées peuvent provoquer des courts-circuits et des dysfonctionnements. Ne pas trop serrer la vis, car cela risque d'endommager les bornes et de provoquer des courts-circuits et des dysfonctionnements. Utiliser uniquement des fils de cuivre avec une valeur nominale de 600 V, 90 ℃ pour le câblage de la borne d'alimentation, et une valeur nominale de 300 V, 75 ℃ pour le câblage de la borne de commande.

11.7 Dynamic breaking unit (DBU) and Resistors

11.7.1 Dynamic breaking unit (DBU)

UL form	Type	Voltage	Capacity of applied motor	Braking unit	Terminal arrangement &Dimensions
UL type	Type A	200V	30, 37 kW	SV370DBU-2U	Refer to the

	(Resistance of DB Resistor refer to the table of "11.7.6 DB Resistors")		45, 55 kW	SV550DBU-2U	appearance of Group 1.
			75 kW	SV370DBU-2U, 2Set	
		400V	30, 37 kW	SV370DBU-4U	
			45, 55 kW	SV550DBU-4U	
			75 kW	SV750DBU-4U	
			90 kW	SV550DBU-4U, 2Set	
			110, 132kW	SV750DBU-4U, 2Set	
			160kW	SV750DBU-4U, 3Set	
Non UL type	Type B (Resistance of DB Resistor refer to the manual of DB Unit)	200V	30, 37 kW	SV037DBH-2	Refer to the appearance of Group 2
		400V	30, 37 kW	SV037DBH-4	
			45, 55, 75 kW	SV075DBH-4	
				SV075DB-4	Refer to the appearance of Group 3
			185, 220kW	SV2200DB-4	Refer to the appearance of Group 4
			250~355kW	SV2200DB-4, 2Set	
	Type C (Resistance of DB Resistor refer to the manual of DB Unit)	200V	30, 37 kW	LSLV0370DBU-2LN	Refer to the appearance of Group 5
				LSLV0370DBU-2HN	Refer to the appearance of Group 6
			45, 55, 75 kW	LSLV0750DBU-2LN	Refer to the appearance of Group 5
				LSLV0750DBU-2HN	Refer to the appearance of Group 6
		400V	30, 37 kW	LSLV0370DBU-4LN	Refer to the appearance of Group 5
				LSLV0370DBU-4HN	Refer to the appearance of Group 6
			45, 55, 75kW	LSLV0750DBU-4LN	Refer to the appearance of Group 5
			90 kW	LSLV0900DBU-4HN	Refer to the appearance of Group 6
			110, 132kW	LSLV1320DBU-4HN	
			160kW	LSLV1600DBU-4HN	
			185, 220kW	LSLV2200DBU-4HN	

			250~355kW	LSLV2200DBU-4HN, 2Set	
			400, 500kW	LSLV2200DBU-4HN, 2Set	

Note

- It is not necessary to use option type dynamic braking unit for H100 0.75~18.5kW(200V) and 0.75~30kW(400V) because basically the dynamic braking unit is built in.
- You must refer to dynamic braking unit manual for usage recommended dynamic braking unit in the table above due to changeable table.
- Resistance/watt/breaking torque/%ED of DB Resistor for Type A DB Unit refer to the table of"11.7.6 DB Resistors" and Resistance of DB Resistor for type B and C refer to the manual of DB Unit.

11.7.2 Terminal arrangement

Group 1:

Group 2:

Terminals	Functions
G	Ground Terminal
B2	Terminal for connection with B2 of DBU
B1	Terminal for connection with B1 of DBU
N	Terminal for connection with N of Inverter
P	Terminal for connection with P1 of Inverter

* Note: READ DBU User manual certainly when selecting DB resistors.

Group 3:

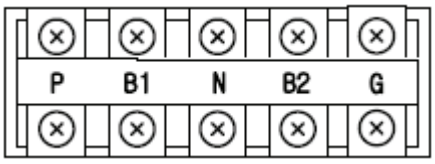

Group 4:

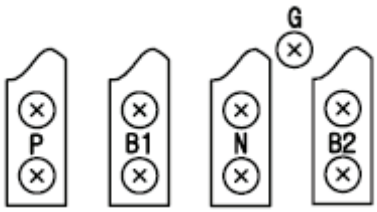

Terminals	Functions
G	Ground Terminal
B2	Terminal for connection with B2 of DBU
B1	Terminal for connection with B1 of DBU
N	Terminal for connection with N of Inverter
P	Terminal for connection with P of Inverter

Group 5:

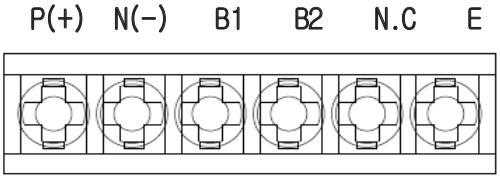

www.nicsanat.com
021-87700210
NIC SANAT
نیک صنعت

Terminals	Functions
P(+)	Terminal for connection with P of Inverter
N(-)	Terminal for connection with N of Inverter
B1	Terminal for connection with B1 of DBU

Terminals	Functions
B2	Terminal for connection with B2 of DBU
N.C	Unused
E	Ground Terminal

Group6:

A Frame (37kW, 75kW-4)

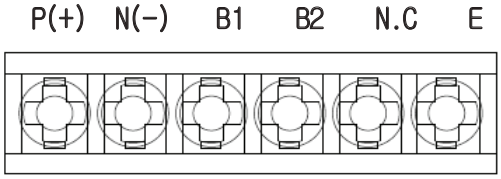

www.nicsanat.com
021-87700210
NIC SANAT
نیک صنعت

B /C Frame (75kW-2, 90~220kW)

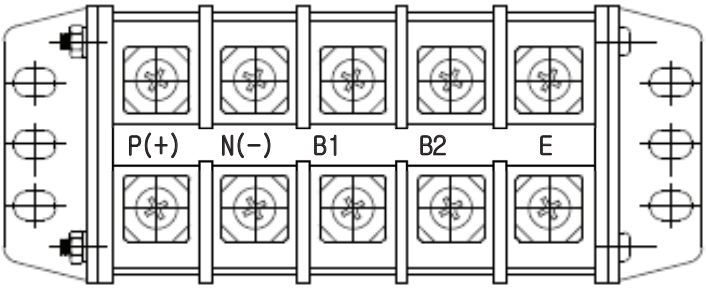

Terminals	Functions
P(+)	Terminal for connection with P of Inverter
N(-)	Terminal for connection with N of Inverter
B1	Terminal for connection with B1 of DBU
B2	Terminal for connection with B2 of DBU
E	Unused

Note

You must refer to dynamic braking unit manual for choice the braking resistor to use the dynamic braking unit.

www.nicsanat.com
021-87700210
NIC SANAT
نیک صنعت

11.7.3 Dynamic Breaking (DB)Unit & DB resistor basic wiring

0.75~90kW

110~500kW

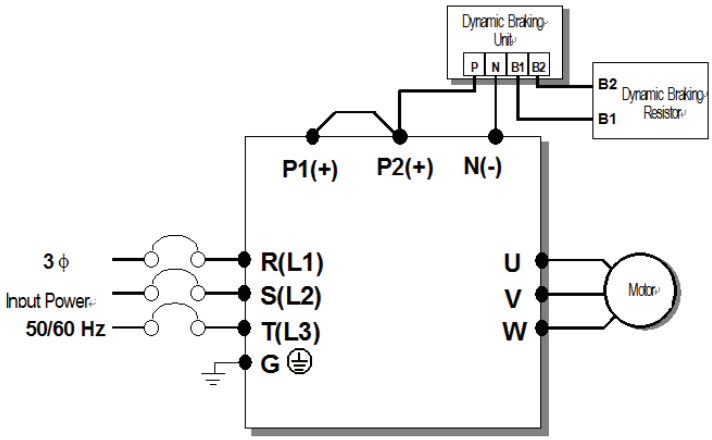

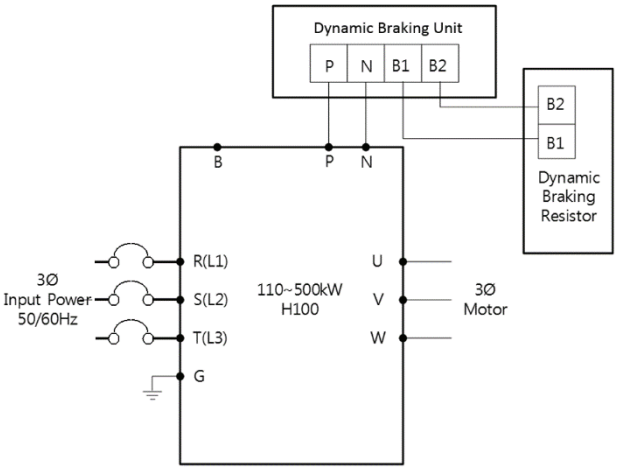

DBU Terminals	Description
B1,B2	Wire correctly referring to wiring diagram. DB Resistors connect with B1, B2 of DB Unit.

In case of large capacity, it may be necessary to connect more than 2 sets of DB Unit according to the usage environment.

In such cases, check the DB Unit manual.

11.7.4 Dimensions

-Group1

- Group2

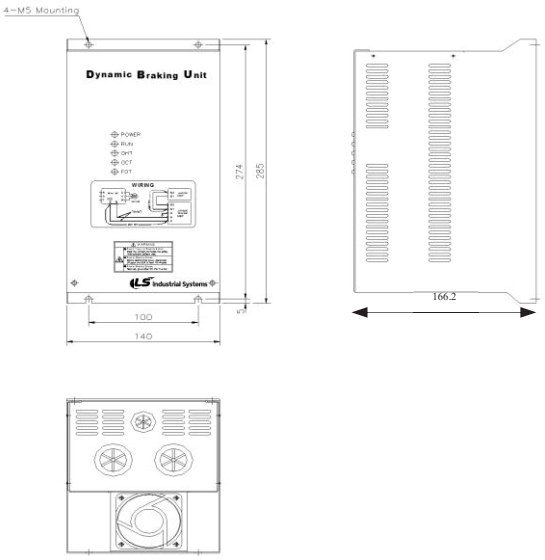

-Group3

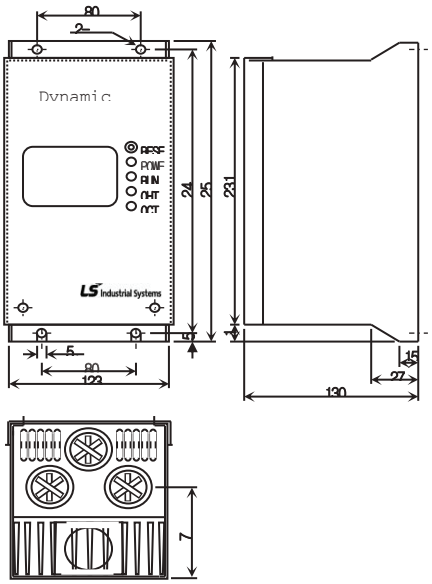

- Group4

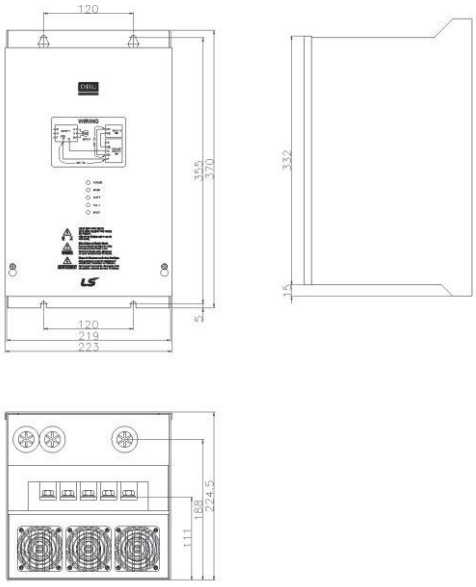

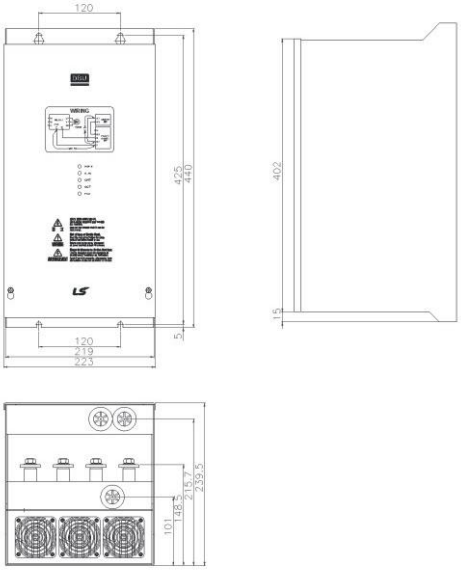

- Group5

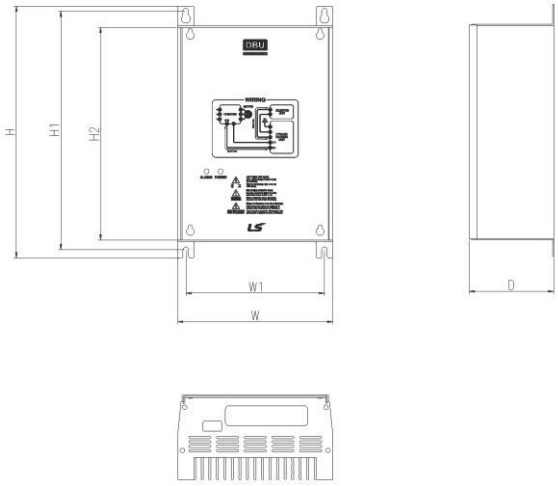

www.nicsanat.com
021-87700210
NIC SANAT
نیک صنعت

Voltage	Capacity of applied motor	Dimension (mm)				Hole position for installation (mm)		Weight	Hole size for installation
(V)	(kW)	W	H	H2	D	W1	H1	(kg)	(ϕ)
220	15	140	227.4	192	76.4	125	215.4	1.50	M4
	22							1.55	
	37							1.57	
	75							1.84	
440	15							1.53	
	22							1.55	
	37							1.56	
	75							1.85	

- Group6

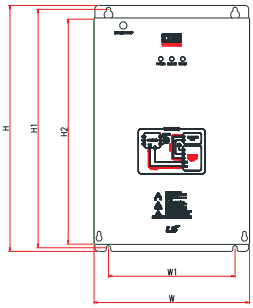

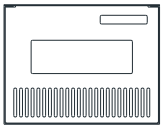

www.nicsanat.com
021-87700210
NIC SANAT
نیک صنعت

A Frame	220 [V]	37 [kW]	50	200	219	190	165.2	160	208.5	3.77	M6
	440 [V]	37 [kW]	50							3.84	
		75 [kW]	50							3.98	
B Frame	220 [V]	75 [kW]	50	215	340	311		175	329.5	8.26	
		90 [kW]	50							8.48	
	440 [V]	90 [kW]	50							8.30	
		132 [kW]	50							8.40	
C	440	160 [kW]	50	240	380	351		200	369.5	9.40	

Fram e	[V]	220 [kW]	50							9.70	

11.7.5 Display Functions

DB Resistors connect with B1, B2 of DB Unit. DBU has 3 LEDs. Red LED which is located in middle displays supplying main power, one Green LED which is right side displays under breaking and another green LED which is left side displays Over Heat Trip(OHT).

Displays	Function description
POWER (Red LED)	POWER LED is turned On when main power is supplied.Generally, POWER LED is turn On while main power supplied because DBU is connected with inverter.
RUN (Green LED)	RUN LED is turned off while DBU is ON by regenerative energy of Motor.
OHT (Green LED)	Under Breaking, if the temperature is exceeded over setting value due to over heat of Heatsink, Cut the TURN ON signal of DBU and LED is turn on by working overheat protection function.

11.7.6 DB Resistors

Product (kW)		DB unit	Torque 100%			Torque 150%		
			Resistor (Ω)	Wattage [W] (%ED=5%)	Wattage [W] (%ED=10%)	Resistor (Ω)	Wattage [W] (%ED=5%)	Wattage [W] (%ED=10%)
3-Phase 200 V	0.75	-	200	100	200	150	150	300
	1.5	-	100	200	400	60	300	600
	2.2	-	60	300	600	50	400	800
	3.7	-	40	500	1000	33	600	1200
	5.5	-	33	600	1200	20	800	1600
	7.5	-	20	800	1600	15	1200	2400
	11	-	15	1200	2400	10	2400	4800
	15	-	10	2400	4800	8	2400	4800
	18.5	-	8	2400	4800	6	2600	5200
3-	0.75	-	900	100	200	600	150	300

Product (kW)		DB unit	Torque 100%			Torque 150%		
			Resistor (Ω)	Wattage [W] (%ED=5%)	Wattage [W] (%ED=10%)	Resistor (Ω)	Wattage [W] (%ED=5%)	Wattage [W] (%ED=10%)
Phase 400 V	1.5	-	450	200	400	300	300	600
	2.2	-	300	300	600	200	400	800
	3.7	-	200	400	800	130	600	1200
	5.5	-	120	700	1400	85	1000	2000
	7.5	-	90	1000	2000	60	1200	2400
	11	-	60	1200	2400	40	2000	4000
	15		45	2000	4000	32	2400	4800
	18.5	-	35	2400	4800	20	3600	7200
	22	-	30	2400	4800	20	3600	7200
	30	-	20	3600	7200	16	5000	10000
	37	DBU-U	16.9	3.2	6.4	-	-	-
		DBH	16.9	3.2	6.4	12	5	10
		LSLV-DB	16.9	3.2	6.4	12	5	10
	45	DBU-U	11.4	4.8	9.6	-	-	-
		DBH	11.4	4.8	9.6	10	6.4	12.8
		LSLV-DB	11.4	4.8	9.6	10	6.4	12.8
	55	DBU-U	11.4	4.8	9.6	-	-	-
		DBH	11.4	4.8	9.6	8.4	7.2	14.4
		LSLV-DB	11.4	4.8	9.6	8.4	7.2	14.4
	75	DBU-U	8.4	6.4	12.8	-	-	-
		DBH	8.4	6.4	12.8	6	10	20
		DB	8.4	6.4	12.8	6	10	20
	90	LSLV-DB	6	10	20	5	13	26
	110	LSLV-DB	5	13	26	4	16	32
	132	LSLV-DB	4	16	32	3.4	20	40
	160	LSLV-DB	3.4	20	40	2.8	24	48
	185	LSLV-DB	2.8	24	48	2.4	26	52
	220	LSLV-DB	2.4	26	52	2	30	60
	250	132kW DB Unit and Resistor * 2 Set (Parallel)						

	315	160kW DB Unit and Resistor * 2 Set (Parallel)						
	355	185kW DB Unit and Resistor * 2 Set (Parallel)						
	400	220kW DB Unit and Resistor * 2 Set (Parallel)						
	500	185kW DB Unit and Resistor * 3 Set (Parallel)						

Note

- It is not necessary to use option type dynamic braking unit for H100 0.75~18.5kW(200V) and 0.75~30kW(400V) because basically the dynamic braking unit is built in.
- The resistance/rated capacity/breaking torque/%ED of DB Resistor are valid only for the DB unit of type A and the values of DB Resistor for type B and C refer to the manual of DB Unit..
- Rating Watt of DBU has to be doubled when %ED is doubled.

11.8 Inverter Continuous Rated Current Derating

Derating by carrier frequency

The continuous rated current of the inverter is limited based on the carrier frequency. Refer to the following graph.

<200[V], 0.75[kW]–18.5[kW], 400[V] 0.75–30[kW] Current Derating Rate>

www.nicsanat.com
021-87700210
NIC SANAT
نیک صنعت

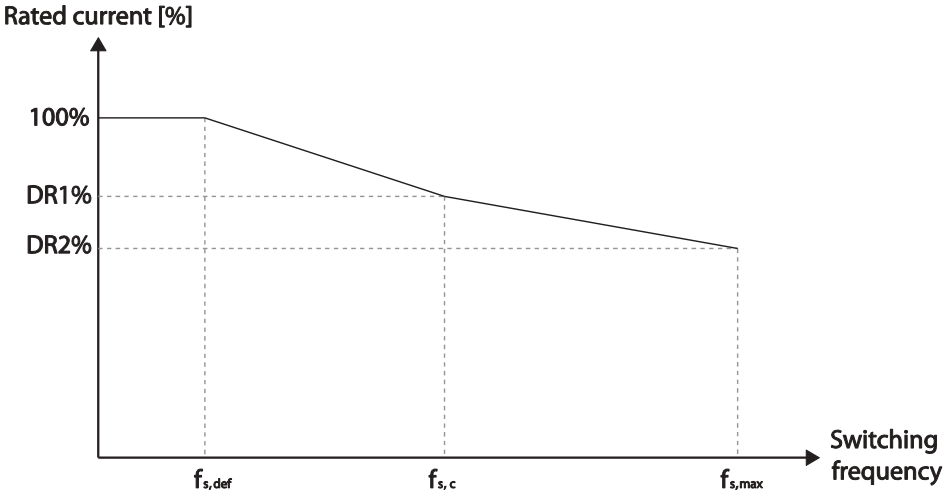

<400[V] 37~500[kW] Current Derating Rate >

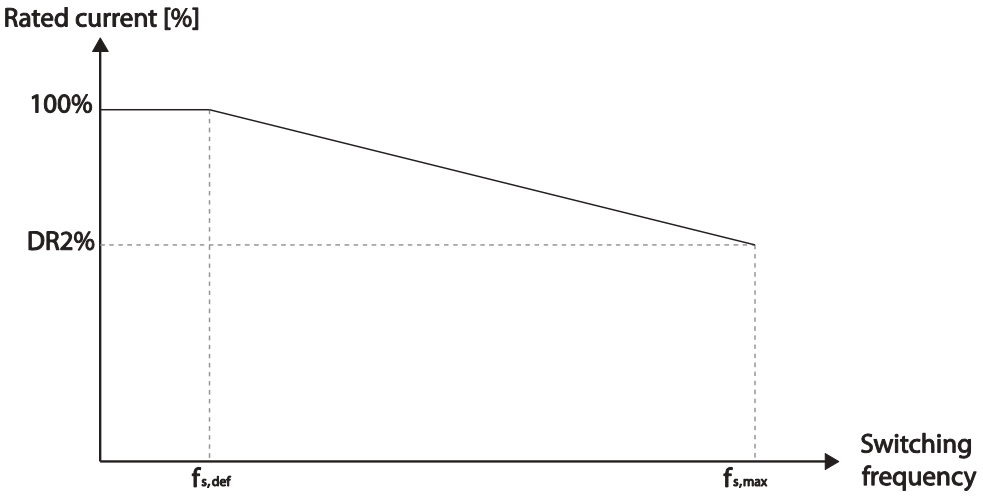

fs,def	kHz	3	3	3	3	3	2	1.5	1.5
fs,c	kHz	8	8	8	-	-	-	2	4
fs,max	kHz	15	15	15	10	7	5	4	4
DR1 %	%	70	65	65	-	-	-	95	92
DR2 %	%	60	55	50	60	55	76	75	65

*fs,def: Switching frequency for continued operation
fs,c: Switching frequency where the first current derating ends.
ffs.max: The maximum switching frequency (where the second current derating begins)

www.nicsanat.com
021-87700210
NIC SANAT
نیک صنعت

Derating by Input Voltage

The continuous rated current of the inverter is limited based on the input voltage. Refer to the following graph.

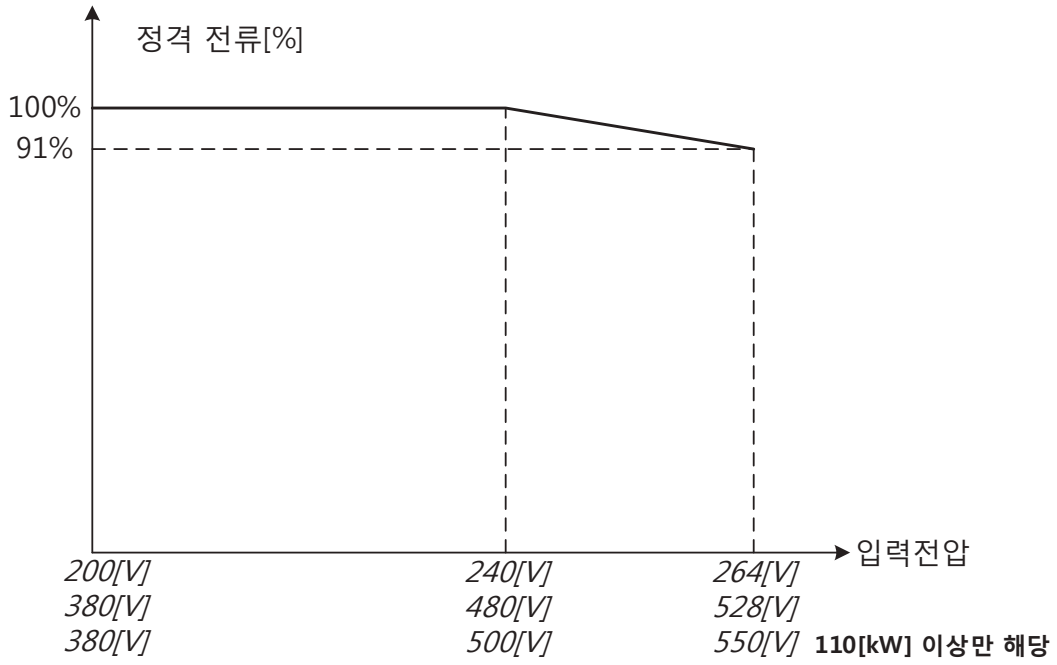

Derating by Ambient Temperature and Installation Type

Ambient temperature and installation type determine the constant-rated current of the inverter. Refer to the following graph. A 2.5% current derating is applied during operation when the ambient temperature is above 40℃. The inverter must be operated at less than 75% of its rated capacity when the ambient temperature is above 50℃.

www.nicsanat.com
021-87700210
NIC SANAT
نیک صنعت

12 Applying Drives to Single-phase Input Application

12.1 Introduction

LSLV-H100 is a three-phase standard variable frequency drive(VFD). When applying single-phase power to a three-phase VFD, there are several constraints that need to be considered. Standard Pulse-Width-Modulated (PWM) VFDs use a 6-pulse diode rectifier. The 6-pulse rectification results in 360 Hz DC bus ripple when used with a three-phase 60 Hz supply.

However, under single-phase use, the DC bus ripple becomes 120 Hz and the VFDs DC bus circuit is subject to higher stress in order to deliver equivalent power.

Additionally, input currents and harmonics increase beyond those encountered with three-phase input.

Input current distortion of 90% THD and greater can be expected under single-phase input, compared to approximately 40% with three-phase input as indicated in Figure 2.

Therefore, single-phase use requires the three-phase VFD power rating be reduced (derated) to avoid over stressing the rectifier and DC link components.

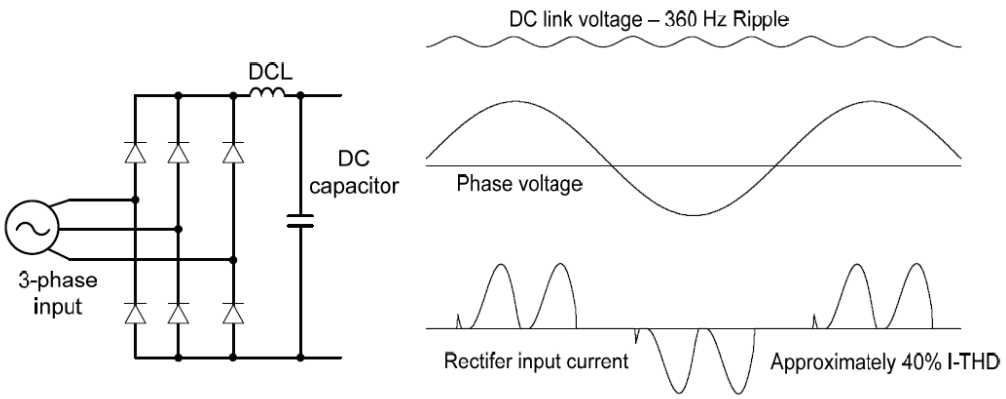

Figure-1 Typical Three-Phase Configuration

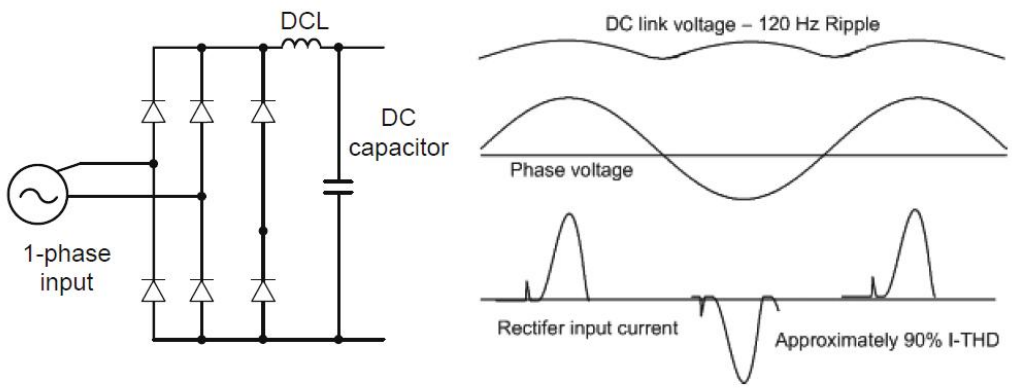

Figure-2 Typical Single-Phase Configuration

12.2 Power(HP), Input Current and Output Current

When using a three-phase VFD with single-phase input, derating the drive's output current and horsepower will be necessary because of the increase in DC bus ripple voltage and current.

In addition, the input current through the remaining two phases on the diode bridge converter will approximately double, creating another derating consideration for the VFD. Input current harmonic distortion will increase beyond that with a three-phase supply making the overall input power factor low. Input current distortion over 100% is likely under single-phase conditions without a reactor.

Therefore, the reactor is always required. When using a motor that is selected by the three-phase drive rating criteria when using single-phase input, it may result in poor performance, premature drive failure. The selected drive of single-phase current ratings must meet or exceed the motor current rating.

In case of single-phase input, the rating of the inverter is smaller than that of the motor. Please check the rating table of 11.1.

www.nicsanat.com
021-87700210
NIC SANAT
نیک صنعت

12.3 Input Frequency and Voltage Tolerance

The single-phase current ratings are valid for 60Hz input only.

For single-phase input AC voltage, products with 90 kW or less are within -5% to + 10% of 240/480 Vac. Products with 110 kW or more are in the range of -5% to + 10% of 380/500 Vac. Standard product with three-phase voltage input has an allowable range of +10% to –15%. Therefore, a stricter input voltage tolerance of +10 to –5% applies when using the drive with a single-phase supply. The average bus voltage with single-phase input is lower than the equivalent of a three-phase input.

Therefore, the maximum output voltage (motor voltage) will be lower with a single-phase input. The minimum input voltage must be no less than 228Vac for 240 volt models and 456Vac for 480 volt models, to ensure motor voltage production of 207Vac and 415Vac, respectively.

Thus, if full motor torque must be developed near base speed (full power) it will be necessary to maintain a rigid incoming line voltage so that adequate motor voltage can be produced. Operating a motor at reduced speed (reduced power), or using a motor with a base voltage that is lower than the incoming AC supply rating (ex. 208Vac motor with a 240Vac supply), will also minimize the effect of voltage deprivation. (240VAC Input 208V motor, 480VAC Input 400V motor)

www.nicsanat.com
021-87700210
NIC SANAT
نیک صنعت

12.4 Wiring

Please connect single-phase input to R(L1) and T(L3).

Figure-3 Terminal Wiring Diagram

12.5 Precautions for 1–phase input to 3-phase drive

- Please connect single-phase input to R(L1) and T(L3).
- AC or DC reactor is necessary to reduce DC ripple. Please select built-in reactor type for 37~500kW. For 0.75~30kW, external AC or DC reactor should be installed.
- Same peripheral devices (including a fuse and reactor) as 3 phases can be used for single phase as well.
- If phase open trip occurs, please turn off the input phase open protection(PRT-05).
- Protection for output current like OCT or IOLT is based on 3-phase input ratings which is larger than single-phase input. User should set the parameters that are relative to motor information(BAS-11~16), overload trip(PRT-17~22) and E-thermal functions(PRT-40~43).
- The minimum input voltage must be larger than 228Vac for 240Vac supply and 456Vac for 480Vac supply to ensure motor voltage production of 207Vac and 415Vac, respectively.
- To minimize the effect of voltage deprivation, please choose 208Vac motor for 240Vac supply and 400Vac motor for 480Vac supply.

Product Warranty

Warranty Information

Fill in this warranty information form and keep this page for future reference or when warranty service may be required.

Product Name	LSIS Standard Inverter	**Date of Installation**	
Model Name	LSLV-H100	**Warranty Period**	
Customer Info	Name (or company)		
	Address		
	Contact Info.		
Retailer Info	Name		
	Address		
	Contact info.		

Warranty Period

The product warranty covers product malfunctions, under normal operating conditions, for 12 months from the date of installation. If the date of installation is unknown, the product warranty is valid for 18 months from the date of manufacturing. Please note that the product warranty terms may vary depending on purchase or installation contracts.

Warranty Service Information

During the product warranty period, warranty service (free of charge) is provided for product malfunctions caused under normal operating conditions. For warranty service, contact an official LSIS agent or service center.

Non-Warranty Service

A service fee will be incurred for malfunctions in the following cases:

- intentional abuse or negligence
- power supply problems or from other appliances being connected to the product
- acts of nature (fire, flood, earthquake, gas accidents, etc.)
- modifications or repair by unauthorized persons
- missing authentic LSIS rating plates
- expired warranty period

Visit Our Website

Visit us at ***http: //www.lsis.com*** for detailed service information.

www.nicsanat.com
021-87700210
NIC SANAT
نیک صنعت

UL mark

The UL mark applies to products in the United States and Canada. This mark indicates that UL has tested and evaluated the products and determined that the products satisfy the UL standards for product safety. If a product received UL certification, this means that all components inside the product had been certified for UL standards as well. Suitable for Installation in a Compartment Handing Conditioned Air

CE mark

The CE mark indicates that the products carrying this mark comply with European safety and environmental regulations. European standards include the Machinery Directive for machine manufacturers, the Low Voltage Directive for electronics manufacturers and the EMC guidelines for safe noise control.

Low Voltage Directive

We have confirmed that our products comply with the Low Voltage Directive (EN 61800-5-1).

EMC Directive

The Directive defines the requirements for immunity and emissions of electrical equipment used within the European Union. The EMC product standard (EN 61800-3) covers requirements stated for drives.

www.nicsanat.com
021-87700210
NIC SANAT
نیک صنعت

EAC mark

The EAC (EurAsian Conformity) mark is applied to the products before they are placed on the market of the Eurasian Customs Union member states.

It indicates the compliance of the products with the following technical regulations and requirements of the Eurasian Customs Union:

Technical Regulations of the Customs Union 004/2011 "On safety of low voltage equipment"

Technical Regulations of the Customs Union 020/2011 "On electromagnetic compatibility of technical products"

www.nicsanat.com
021-87700210
NIC SANAT
نیک صنعت

EC DECLARATION OF CONFORMITY

We, the undersigned,

Representative:	**LSIS Co., Ltd.**
Address:	**LS Tower, 127, LS-ro, Dongan-gu, Anyang-si, Gyeonggi-do, Korea**
Manufacturer:	**LSIS Co., Ltd.**
Address:	**56, Samseong 4-gil, Mokcheon-eup, Dongnam-gu, Cheonan-si, Chungcheongnam-do, Korea**

Certify and declare under our sole responsibility that the following apparatus:

Type of Equipment:	**Inverter (Power Conversion Equipment)**
Model Name:	**LSLV-H100 series**
Trade Mark:	**LSIS Co., Ltd.**

Conforms with the essential requirements of the directives:

2014/35/EU Directive of the European Parliament and of the Council on the harmonisation of the laws of the Member States relating to the making available on the market of electrical equipment designed for use within certain voltage limits.

2014/30/EU Directive of the European Parliament and of the Council on the harmonisation of the laws of the Member States relating to electromagnetic compatibility.

Based on the following specifications applied:

EN 61800-3:2004/A1:2012
EN 61800-5-1:2007

and therefore complies with the essential requirements and provisions of the 2014/35/CE and 2014/30/CE Directives.

Place: **Chonan, Chungnam, Korea**

황상원 2016.1.13 (Signature / Date)

(Full name / Position)

EMI / RFI POWER LINE FILTERS

LSIS inverters, H100 series

RFI FILTERS

THE LS RANGE OF POWER LINE FILTERS FLD/AAND FEP (Standard) SERIES, HAVE BEEN SPECIFICALLY DESIGNED WITH HIGH FREQUENCY LSIS INVERTERS. THE USE OF LS FILTERS, WITH THE INSTALLATION ADVICE OVERLEAF HELP TO ENSURE TROUBLE FREE USE ALONG SIDE SENSITIVE DEVICES AND COMPLIANCE TO CONDUCTED EMISSION AND IMMUNITY STANDARS TO EN 50081.

CAUTION

IN CASE OF A LEAKAGE CURRENT PROTECTIVE DEVICES IS USED ON POWER SUPPLY, IT MAY BE FAULT AT POWER-ON OR OFF.
IN AVOID THIS CASE, THE SENSE CURRENT OF PROTECTIVE DEVICE SHOULD BE LARGER

RECOMMENDED INSTALLATION INSTRUCTIONS

To conform to the **EMC** directive, it is necessary that these instructions be followed as closely as possible. Follow the usual safety procedures when working with electrical equipment. All electrical connections to the filter, inverter and motor must be made by a qualified electrical technician.

1-) Check the filter rating label to ensure that the current, voltage rating and part number are correct.

2-) For best results the filter should be fitted as closely as possible to the incoming mains supply of the wiring enclousure, usually directly after the enclousures circuit breaker or supply switch.

3-) The back panel of the wiring cabinet of board should be prepared for the mounting dimensions of the filter. Care should be taken to remove any paint etc... from the mounting holes and face area of the panel to ensure the best possible earthing of the filter.

4-) Mount the filter securely.

5-) Connect the mains supply to the filter terminals marked **LINE**, connect any earth cables to the earth stud provided. Connect the filter terminals marked **LOAD** to the mains input of the inverter using short lengths of appropriate gauge cable.

6-) Connect the motor and fit the ferrite core (output chokes) as close to the inverter as possible. Armoured or screened cable should be used with the 3 phase conductors only threaded twice through the center of the ferrite core. The earth conductor should be securely earthed at both inverter and motor ends. The screen should be connected to the enclousure body via and earthed cable gland.

7-) Connect any control cables as instructed in the inverter instructions manual.

IT IS IMPORTANT THAT ALL LEAD LENGHTS ARE KEPT AS SHORT AS POSSIBLE AND THAT INCOMING MAINS AND OUTGOING MOTOR CABLES ARE KEPT WELL SEPARATED.

FLD/A FEP SERIES (Standard)

Fig 1

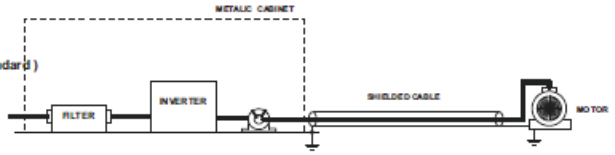

INTERNAL FILTERS

Fig 2

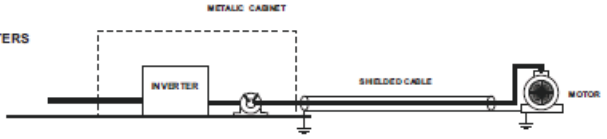

LSLV series / Standard Filters											
INVERTER	POWER	CODE	CURRENT	VOLTAGE	LEAKAGE CURRENT	DIMENSIONS L W H	MOUNTING Y X	WEIGHT	MOUNT	FIG.	OUTPUT CHOKES
THREE PHASE					NOM. MAX.						
LSLV0055H100-2	5.5kW	FLD/A 3042	42A	250VAC	0.5mA 27mA	310 x 50x 85	30 x 295	2.4Kg	---	A	FS – 2
LSLV0075H100-2	7.5kW	FLD/A 3055	55A	250VAC	0.5mA 27mA	250 x 85x 90	60 x 235	2.9Kg	---	A	FS – 2
LSLV0110H100-2	11kW	FLD/A 3075	75A	250VAC	0.5mA 27mA	270 x 80 x 135	60 x 255	3.6Kg	---	A	FS – 2
LSLV0150H100-2	15kW	FLD/A 3100	100A	250VAC	0.5mA 27mA	270 x 90 x 135	65 x 255	5Kg	---	A	FS – 3
LSLV0185H100-2	18.5kW	FLD/A 3130	130A	250VAC	0.5mA 27mA	270 x 90 x 150	65 x 255	6.8Kg	---	A	FS – 3

EN 55011 CLASS A IEC/EN 61800-3 C3

LSLV series / Internal Filters			
INVERTER	POWER	FIG.	OUTPUT CHOKES
THREE PHASE			
LSLV0055H100-4	5.5kW	2	FS – 2
LSLV0075H100-4	7.5kW	2	FS – 2
LSLV0110H100-4	11kW	2	FS – 2
LSLV0150H100-4	15kW	2	FS – 3
LSLV0185H100-4	18.5kW	2	FS – 3
LSLV0220H100-4	22kW	2	FS – 3
LSLV0300H100-4	30kW	2	FS – 3
LSLV0370H100-4	37kW	2	FS – 3
LSLV0450H100-4	45kW	2	FS – 3
LSLV0550H100-4	55kW	2	FS – 3

LSLV series		
INVERTER	POWER	OUTPUT CHOKES
THREE PHASE		
LSLV0750H100-4	75kW	FS – 4
LSLV0900H100-4	90kW	FS – 4

EN 55011 CLASS A IEC/EN 61800-3 C3

FIG. 2

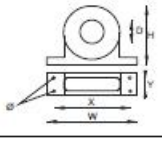

FS SERIES (output chokes)

CODE	D	W	H	X	Ø
FS – 2	28.5	105	62	90	5
FS – 3	48	150	110	125 x 30	5
FS – 4	58	200	170	180 x 45	5

FLD SERIES (Standard)

FIG.A

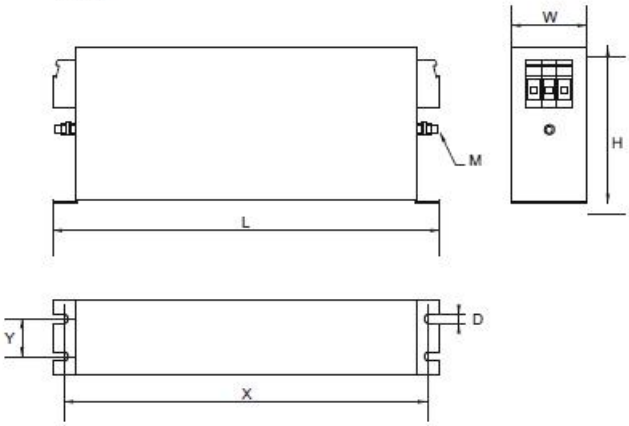

VECTOR MOTOR CONTROL IBÉRICA (VMC)
C/ Mar del Caribe, 10 - Pol. Ind. La Torre del Rector
08130 Santa Perpètua de Mogoda (Barcelona)
SPAIN / ESPAÑA

Tel: +34 - 935 748 206
Fax: +34 - 935 748 248
E-mail: info@vmc.es
http: www.vmc.es

Index

[

[AUTO] key 53
[DOWN] key 53
[ESC] key 53
[HAND] key 53
[LEFT] key 53
[Mode] key 53
[MULTI] key 53
[MULTI] key configuration 55
[OFF] key 53
[PROG / Ent] key 53
[RIGHT] key 53
[UP] key 53

2

24 terminal 40, 41
2nd motor operation 239
2nd operation mode 136
- 2nd command source 136
- Shared command (Main Source) 136
- Shared command (Main Source)) 136

3

3-wire operation 151

4

4-pole standard motor 529, 530, 531, 532, 533, 534

A

A terminal (Normally Open) 138
A1/C1/B1 terminal 40
AC power input terminal ..... Refer to R/S/T terminal
Acc/Dec pattern 79, 117
- linear pattern 117
- S-curve pattern 117

Acc/Dec reference 113
- Delta Freq 112
- Max Freq 112

Acc/Dec reference frequency 112
- Ramp T Mode 112

Acc/Dec stop 79, 120
Acc/Dec time 111
- Acc/Dec time switch frequency 116
- configuration via multi-function terminal 114
- maximum frequency 111
- operation frequency 113

Acc/Dec time configuration 79
accelerating start 80
add User group
- UserGrp SelKey 247

ADV (advanced) 60
ADV (Expanded funtction group) 401
advanced features group 60
Advanced function groupRefer to ADV (advanced) function group
analog frequency hold 100
- analog hold 100

analog hold ..... Refer to *analog frequency hold*
analog input 38, 60
- I2 current input 94
- I2 voltage input 96
- TI pulse input 97
- V1 voltage input 88

analog input selection switch (SW2) 96
analog input selection switch (SW4) 36
analog output 39, 288
AO terminal 39
pulse output 291
voltage and current output 288
analog output selection switch (SW5) 36, 288
anti-hunting regulation 228
AO terminal 39, 288
analog output selection switch (SW5) 36
AP1 (Application 1 function group) 452
AP1 (Application1 function group) 60
AP2 (Application 2 function group) 60, 459
AP3 (Application 3 function group) 60, 464
ARM short current fault trip Refer to *Over Current2*
ASCII code 349
asymmetric ground power 43
asymmetric ground structure
disabling the EMC filter 43
asynchronous communications system 335
auto restart 236
auto restart settings 236
auto torque boost 126
auto torque boost 1 126
auto torque boost 2 126
auto tuning 208
auto tuning 208, 398
All (rotating) 210
All (static) 211
default parameter setting 209
automatic reset after a trip 79
automatic start-up at power-on 79
automatic torque boost 80
auto-tuning 208
auxiliary command source 81
auxiliary frequency 142
auxiliary frequency reference configuration 143
auxiliary reference 142
auxiliary reference gain 143
final command frequency calculation 144
main reference 142
auxiliary motor PID compensation 279, 280

B

B terminal (Normally Closed) 138
BACnet 337, 373
analog input object 380
analog value object 378
binary input object 382
binary object 379
communication standard 373
data link layer 376
defining 373
error message 383
MAC ID/Sevice object Instance 376
Max Master Property 376
multi-state input object 383
multi-state object 379
object map 376
parameter setup 373
protocol 373
protocol implement 376
quick start 373
BACnet object
analog 378
analog input 380
binary 379
binary input 382
error message 383
multi-state 379
multi-state input 383
BAS (Basic function group) 394
BAS (Basic group) 60
basic configuration diagram 18
Basic group Refer to BAS (Basic function group)
basic operation 52
battery replacement 524
bipolar 39, 92

bit 138
bit (Off) 138
bit (On) 138
bit setting 138
multi-function input setting 138, 139
multi-function output setting 298
Reset Restart configuration 236
speed search configuration 233
stall prevention 311
brake unit 287
braking resistor 31
braking resistors 18
broadcast 346
built-in communication Refer to *RS-485*
BX 332, 507

C

cable 14, 27, 28, 29, 36
ground cable specifications 14
power cable specifications 14
selection 14, 27, 28, 29, 36
shielded twisted pair 49
cable tie 40
CAP. Warning 509
carrier frequency 238
derating 561
factory default 239
charge indicator 26, 505, 513
charge lamp 26
Circululation Pump (MC5) 499
cleaning 520
CleanRPTErr 508
CM terminal 38, 41
COM (Communication function group) 60
command 103
Cmd Source 103
configuration 103
command source
fwd/rev command terminal 104
keypad 103
RS-485 106
commercial power source transition 241
common terminal Refer to EG terminal
communication 335
BACnet 373
command loss protective operation 339
communication address 351
communication line connection 336
communication parameters 337
communication speed 337
communication standards 335
memory map 342
parameter group for data transmission 343
PLC 335
saving parameters defined by communication 341
setting virtual multi-function input 341
Communication function group Refer to COM (communication function group)
communication system configuration 336
compatible common area parameter 355
CON (Control function group) 60, 408
Config (CNF) mode 250
inverter S/W version 250
keypad S/W version 250
keypad title update 250
LCD contrast 250
reset cumulative power consuption 250
Config mode 486
Config mode (CNF) 487
configuration mode 59
considerations for installation
air pressure 10
considerations for installation 10
altitude/vibration 10
ambient humidity 10
ambient temperature 10
environmental factors 10
storing temperature 10
Control group Refer to CON (control function group)
control terminal board wiring 36
cooling fan

cumulated fan operation time 302
fan control....242
fan malfunctions....323
initialize cumulated fan operation time....302
Cooling Tower (MC4)....497
cursor keys....53
[DOWN] key....53
[LEFT] key....53
[RIGHT] key....53
[UP] key....53

D

damper....186
Damper Err Trip.... Refer to *Damper Err Trip*
damper operation....186
damper open delay time....186
DB resistor
braking resistor circuit....320
DB Warn %ED....320
DB Warn %ED....320, 509
DC braking after start....128
DC braking after stop....130
DC braking frequency....130
DC link voltage....140
Dec valve ramping....198
deceleration stop....80
delta wiring....43
derating....239, 561
digital output....293
display....54
command source....54
display mode table....59
display modes....58
frequency reference....54
operation mode....54
rotational direction....54
disposal....520, 528
draw operation....140
Drive group....Refer to DRV (Drive group)
DRV (Drive function group)....60
DRV (Drive group)....389
dwell operation....154
Acc/Dec dewel frequency....154
acceleration dwell....154
deceleration dwell....154
dynamic braking (DB) resistor configuration....320

E

earth leakage breaker....516
Easy Start On....249
EEP Rom Empty....244
EG terminal....40
electronic thermal overheating protection (ETH)
....304
EMC filter....43
asymmetric power source....43
disabling....43, 44, 45, 46
enable....44
enabling....44, 45, 46
emergency stop fault trip....Refer to *BX*
Enclosed Type 1....537
energy saving....190
energy saving operation....231
automatic energy saving operation....231
manual energy saving operation....231
EPID (EPID control) group....60
EPID (External PID function group)....445
EPID control
external PID....177
EPID control group....60
ETH....Refer to *electronic thermal overheating protection (ETH)*
E-Thermal....506
Exception Date....212
Exhaust Fan (MC3)....495

external 24V power terminal.... Refer to 24 terminal
External Trip 507
external trip signal 315

F

falut trips 505
fan life estimation 331
  fan replacement level 331
  fan time 331
fan operation warning 332
fan replacement warning 510
Fan Trip 323, 507
Fan Warning 323, 509
fatal 505
fault 332
  fatal 505
  latch 505
  level 505
  major fault 332
fault monitoring 75
  multiple fault trips 76
fault signal output terminal ..... Refer to A1/C1/B1 terminal
fault trip mode 59
fault/warning list 332
  braking resistor braking rate warning 332
  capacitor lifetime warning 332
  CleanRPTErr Trip 332
  CPU Watch Dog fault trip 332
  Damper Err Trip 332
  E-Thermal 332
  External Trip 332
  fan replacement warning 332
  Fan Trip 332
  Fan Warning 332
  Fire mode Warning 332
  Ground Trip 332
  In Phase Open 332
  IO Board Trip 332
  Level Detect trip 332
  Level Detect Warning 332
  Lost Command 332
  Low Battery Warning 332
  Low Voltage 332
  Low Voltage2 332
  No Motor Trip 332
  NTC Open 332
  Option Trip-x 332
  Out Phase Open 332
  Over Current1 332
  Over Current2 332
  Over Heat 332
  Over Load Trip 332
  Over Voltage 332
  ParaWrite Trip 332
  Pipe Broken Trip 332
  Pipe Broken Warning 332
  Under Load Trip 332
FE (Frame Error) 349
ferrite 40
fieldbus 86, 103
  communication option 136
FIFO/FILO 259
filter time constant 88
filter time constant number 137
Fire mode 229
  Fire Mode Warning 509
flow compensation 189
  maximum compensation value 189
flux braking 310
forward or reverse run prevention 107
free-run stop 81, 131
frequency hold by analog input 100
frequency jump 81, 135
frequency limit 81, 133
  frequency jump 135
  frequency upper and lower limit value 133
  maximum/start frequency 133
frequency reference 87, 128
frequency reference for 0–10V input 88
frequency reference for -10–10V Input 92
frequency reference source configuration 78
frequency setting 86
  I2 current input 94

I2 voltage input....96
keypad....87
RS-485....99
TI pulse input....97
V1 voltage input....88
frequency setting (Pulse train) terminal...Refer to *TI terminal*
frequency setting(voltage) terminal....Refer to *V1 terminal*
frequency upper and lower limit value
Frequency lower limit value....133
Frequency upper limit value....133
fuse specifications....547

G

ground....27
class 3 ground....29
ground cable specifications....14
ground fault trip....Refer to *Ground Trip*
Ground Trip....506

H

H100 expansion common area parameter....359
control area parameter (Read/Write)....368
memory control area parameter (Read/Write)....371
monitor area parameter (read only)....359
half duplex system....335

I

I/O point map....385
I2 39
analog input selection switch (SW4)....39
frequency setting(current/voltage) terminal....39
I2 Terminal....94
IA (illegal data address)....349
ID (illegal data value)....349
IF (illegal function)....349
IN (Input terminal function group)....60, 411
In Phase Open....506
initializing accumulated electric energy count...250
input and output specifications..529, 564, 565, 566
input open-phase fault trip....Refer to *In Phase Open*
input phase open
input open-phase protection....314
input power frequency....243
input power voltage....243
input power voltage settings....243
input terminal....38, 138
A (NO) or B (NC) terminal configuration....138
bit setting....138
CM terminal....38
I2 terminal....39
NO/NC configuration....138
P1–P7 terminal....38
TI terminal....39
V1 terminal....38
VR terminal....38
input terminal contact
A contact....315
B contact....315
Input terminal function group....Refer to IN (Input terminal function group)
inspection
annual inspection....521
bi-annual inspection....523
daily inspection....520
installation....17
basic configuration diagram....18
installation flowchart....17
location....11
mounting the Inverter....19
side-by-side installation....12
wiring....26
installation conditions....10
INV Over Load

Inv Over Load Warning....509
Inverter OLT....506
inverter overload protection (IOLT)....316
Inverter overload warning....332
IO Board connection fault trip.....Refer to *IO Board Trip*
IO Board Trip....508
IP 20....537
IP 20 Type external dimensions....539

J

Jog operation....147
FWD Jog....147
Jog frequency....147
Jog operation 2 by terminal input....148
Jog operation 2-Rev Jog by terminal input....148
jump frequency....135

K

keypad....52
[AUTO] key....53
[ESC] key....53
[HAND] key....53
[Mode] key....53
[MULTI] key....53, 56
[OFF] key....53
[PROG / Ent] key....53
code information....57
Config mode (CNF)....487
configuration mode....59
cursor keys....53
display....52, 54
display item....57
display mode....58
LCD brightness/contrast....250
monitor mode....59
monitor mode cursor....55
monitor mode item....55
navigating between groups....58
operating status....55, 57
operation keys....52
operation mode....56
parameter group....56
parameter mode....59
parameter value....57
rotational direction....56
S/W version....250
set value....57
setting range....57
status bar configuration....55
trip mode....59
User & Macro mode....59
wiring length....40
keypad display....54
keypad features
fault monitoring....75
navigating directly to different codes....68
navigating through the codes....66
operation modes....62
parameter settings....70
selecting a display mode....61
selecting the status bar display item....73
setting the monitor display items....71
switching between groups in Parameter Display mode....64
switching between groups in User & Macro mode65
keypad title update....250
keypad trip mode....486
kinetic energy buffering....226

L

latch....505
LCD display....54
leakage breaker....544
learning basic features....78
level....505
level dectectiontrip restart time....201
Level Detect....508
Level Detect Warning....509
Level Detect Trip....332
level detection control....201
lift-type load....117, 125
linear pattern....117

linear V/F operation 80
linear V/F pattern operation 121
base frequency 121
start frequency 121
load tuning 199
Lost Command 508
command loss fault trip warning 332
command loss trip 332
Lost Command Warning 509
Lost KeyPad 507
Lost KeyPad Warning 509
Low Battery
low battery warning 510
low battery warning 321
low voltage 324
low voltage fault trip 324, 332
Low Voltage 506
Low voltage fault trip during operation ..... Refer to *Low Voltage2 Trip*
Low Voltage2 506
LowLeakage PWM 238
LS INV 485 communication 341
LS INV 485 Detailed Read Protocol 346
LS INV 485 Detailed Write Protocol 347
LS INV 485 error code 349
FE (Frame Error) 349
IA (illegal data address) 349
ID (illegal data value) 349
IF (illegal function) 349
WM (write mode error) 349
LS INV 485 protocol 345
LSINV 485 337
lubrication 188
lubrication operation 188

M

M2 (Secondary Motor function group) 482
M2 (secondary motor-related features) group 60
Circulation Pump (MC5) 499
Constant Torque (MC7) 503
Cooling Tower (MC4) 497
Exhaust Fan (MC3) 495
..... 494
Vacuum Pump (MC6) 501
Macro function group 492
Macro group 492
Macro mode 61
macro selection 251
Macro selection
Basic 251
Circulation Pump 251
Compressor 251
Constant Torque 251
Coolong Tower 251
Supply Fan 251
Vacuum Pump 251
magnetic contactor 35, 544
main capacitor life estimation 329
CAP Level 1 330
CAP Level 2 330
maintenance 520
manual torque boost 80, 125
master 336
maximum allowed prospective short-circuit current iii
megger test 521, 524
Metasys-N2 337
analog input 386
analog output 385
binary input 387
binary output 386
communication standard 384
error code 388
I/O point map 385
protocol 384
metasys-N2 communication 384

Metasys-N2 I/O map
analog input....386
analog output....385
binary input....387
binary output....386
MMC....253
auto cahnge....265, 266, 276, 277
auto change aux....270
basic sequence....260
interlock....272
레귤러 바이패스....281, 282, 283, 284
MMC Interlock....508
Modbus-RTU....337
Modbus-RTU communication....341
Modbus-RTU function code and protocol....351
Modbus-RTU protocol
exception code....354
read holding resister....351
read input resister....351
momentary power interruption....233
monitoring
monitor mode....59
monitor mode cursor....55
monitor mode display....54
monitor mode item....55
monitor registration protocol details....348
operation state monitoring....300
operation time monitoring....302
motor features
capacity....156
efficiency....156
no-load current....156
operation display options....78
output voltage adjustment....127
overheat sensor....306
protection....304
rotation control....79
thermal protection(ETH)
E-Thermal....304
verifying rotational direction....51
Motor overheat fault trip....332
motor thermal protection(ETH)
ETH trip....304
mounting bolt....19
Multi Key
Multi key item....489
Multi Key Sel....489
multi-drop link system....335
multi-function input terminal....38
factory default....38
IN 65–71....414
multi-function input terminal Off filter....137
multi-function input terminal On filter....137
P1–P7....38
Px Define....414
Px terminal configuration....414
multi-function input terminal control....137, 139
multi-function input terminals
factory default....38
multi-function output terminal
multi-function output category (Q1 Define)....424
multi-function output on/off control....285
multi-function output terminal and relay settings....293
multi-function output terminal delay time settings....299
multi-function relay1 category (Relay 1)....422
multi-function relay2 category (Relay 2)....423
multi-function relay3category (Relay 3)....423
multi-function relay4 category (Relay 4)....423
multi-function relay5 category (Relay 5)....423
trip output by multi-function output terminal and relay....298
multi-function terminal configuration....81
multiple motor control....253
multi-step frequency....101
setting....101
Speed-L/Speed-M/Speed-H....102
multi-step speed (frequency)....78

N

N- terminal (- DC link terminal)....31, 32, 33, 34
no motor trip....326
No Motor Trip....506
noise....43, 89

Normal PWM....238
NPN mode (Sink)....42
NTC Open....507
number of motor poles....156

O

open-phase protection....314
operation frequency....Refer to *frequency setting*
operation mode selection....78
operation noise....238
carrier frequency....238
frequency jump....135
operation time....302
cumulated operation time....302
initialize cumulated operation time....302
inverter power-on time....302
option trip....326, Refer to *Option Trip-x*
Option Trip-1....508
Option Trip-x
option trip....332
OUT (Output terminal function group)....60, 420
Out Phase Open....506
output block by multi-function terminal....325
output open-phase fault trip....Refer to *Out Phase Open*
output terminal....Refer to R/S/T terminal
Output terminal function group....Refer to OUT (Output terminal function group)
output/communication terminal....39
24 terminal....40
A1/C1/B1 terminal....40
AO terminal....39
EG terminal....40
S+/S-/SG terminal....40
over current trip....Refer to *Over Current1*
Over Current1....506
Over Current2....507
Over Heat....506
over heat fault trip....Refer to *Over Heat*
Over Load....505
Over Load Warning....509
overload fault trip....332
overload warning....332
Over Voltage....506
over voltage trip....Refer to *Over Voltage*
overload....Refer to *Over Load*
overload trip....308
overload warning....308
overload rate....239
overload trip....Refer to *Over Load*

P

P(+) terminal (+ DC link terminal)....33, 34
P/I gain....233
P1+ terminal (+ DC link terminal)....31
P2+ terminal (+ DC link terminal)....31, 32
P2+/B terminal....31
P3+ terminals (+ DC link terminal)....32
parameter....70
display changed parameter....247
hide parameter mode....245
initializing the parameters....77
parameter initialization....244
parameter lock....246
parameter settings....70
password....245, 246
Parameter Initialization....244
parameter mode....59
parameter setting mode....60
ParaWrite Trip....508
parmeter
read/write/save....243
part names....3
parts illustrated....3
parts life....329

capacitor life estimation....329
fan life....331
password....245, 246, 372
payback counter....190
peripheral devices....544
phase-to-phase voltage....515
PID
flow control....157
pressure control....157
speed control....157
temperature control....157
PID (Advanced function group)....434
PID (PID control) group....60
PID control
PID openloop....176
PID operation sleep mode....174
PID operation switching....176
PID reference....168
PID control group....Refer to PID (PID control) group)
pipe break....204
pipe break dectection control
Pipe Broken....204
pipe break detection control
Pipe Broken....508
Pipe Broken Warning....509
Pipe Broken fault trip....Refer to *PipeBroken Trip*
PNP mode (Source)....41
PNP/NPN mode selection switch (SW2)....36
NPN mode (Sink)....42
PNP mode (Source)....41
post-installation checklist....48
potentiometer....38
power braking....81
power consumption....300, 301
power input terminalRefer to *R/S/T terminal*, Refer to *R/S/T terminal*, Refer to *R/S/T terminal*
power output terminal....Refer to *R/S/T terminal*, Refer to *R/S/T terminal*, Refer to *R/S/T terminal*
power terminal board wiring....29
power terminals....32, 33
N- terminal....31, 32, 33, 34
P(+) terminal....33, 34
P(+)/B terminal....33
P1+ terminal....31
P2+ terminal....31, 32
P2+/B terminal....31
P3+ terminal....32
R/S/T terminals....31, 32, 33, 34
U/V/W terminal....31, 32, 33, 34
PowerOn Resume....303
PowerOn Resume by serial communication....303
Power-on Run....108
pre-heating....206
preparing the installation....1
press regeneration prevention....286
P gain/I gain....287
product identification....1
product specification details....535
protocol
BACnet protocol....373
LS INV 485 protocol....345
Metasys-N2 protocol....384
PRT (protection features) group....60
PRT (Protection function group)....472
Pulse output terminal....Refer to TO terminal
pump clean....192
Pump clean trip....Refer to *Pump Clean Trip*
PWM....238
frequency modulation....238

Q

quantizing....89
Quantizing
noise....89
quick reference....iv

R

R/S/T terminals....31, 32, 33, 34, 513

R/S/T terminals 35
rating
derating 561
rated motor current 156
rated motor voltage 208
rated slip frequency 156
rated slip speed 156
rating plate 1
reactor 18, 19
reactors specifications 547
real-time clock 23
regenerated energy 132
Reset Restart 110
settings 236
resonance frequency
carrier frequency 238
restarting after a trip
Reset Restart 110
retry number 110
ripple 89
RS-232 336
communication 336
RS-485 335
communication 336
converter 336
integrated communication 99
setting command and frequency 339
signal terminal 40, 99
RS-485 signal input terminal ..... Refer to S+/S-/SG terminal
RTC battery 23, 524
enabling 23
replacing 524
specifications 524
run prevention
Fwd 107
Rev 107

S

S/W version 250
inverter 250
keypad 250
S+/S-/SG terminal 40
safe operation mode 152
safety information ii
screw specification
control circuit terminal screw 550
input/output terminal screw 549
screw size 549
screw torque 549
S-curve pattern 117
actual Acc/Dec time 119
secondary motor-related features group ..... Refer to M2 (the secondary motor-related features) group
selecting operation modes 62, 81
auto mode operation 82
basic operation 83
function codes 84
hand mode operation 81
mode keys and indicators 82
Power-on Run/PowerOn Resume in each mode 85
switching between the modes 84
sequence common terminal ..Refer to *CM terminal*
side-by-side installation 12
slave 336
slip 156
slip compensation operation 156
soft fill control
soft fill operation 172
speed command loss 317
speed search operation 232
Flying Start-1 233
Flying Start-2 233
options 233
P/I gain 233
speed unit selection (Hz or Rpm) 101

square reduction....80
square reduction load....122
V/F pattern operation....122
stall....310
bit On/Off....311
stall prevention....310
start after DC braking....80
start at power-on
PowerOn Resume....109
Power-on Run....108
start mode....128
acceleration start....128
start after DC braking....128
Start&End Ramp operation....196
Station ID....351
stop mode....129
DC braking after stop....130
deceleration stop....129
free run stop....131
power braking....132
storage....528
....494
surge killer....35, 49
SW1.... Refer to Terminating Resistor selection switch (SW1)
SW2....Refer to PNP/NPN mode selection switch (SW2)
SW3....Refer to V1/T1 (PTC) mode selection switch (SW3)
SW4..Refer to analog input selection switch (SW4)
SW5.... Refer to analog output selection switch (SW5)
switch
analog input selection switch (SW4)....36
analog output selection switch (SW5)....36
PNP/NPN mode selection switch (SW2)....36
Terminating Resistor selection switch (SW1)....36
V1/T1 (PTC) mode selection switch (SW3)....36
Switches....36

T

target frequency
Cmd frequency....389
Temperature sensor fault trip.... *NTC Open*
terminal
A terminal....138, 299
B terminal....138, 299
terminal for frequency reference setting....Refer to *VR terminal*
terminal screw specifications....548
Terminating Resistor selection switch (SW1)....36
test run....50
Thermal Trip....507
TI terminal....39, 97
Time Event....212
time event scheduling....212
Exception Date....212
module types....212
parameters....212
RTC battery....212
RTC clock....212
Time Event....212
Time Period Module....212
Time Period Module....212
time scale setting....112
0.01sec....112
0.1sec....112
1sec....112
timer....252
protection features groupPRT (protection features) group
TO terminal....291
torque....26
torque boost....125
auto torque boost....126
manual torque boost....125
overexcitation....125
trip....505
erasing trip history....250
fault/waring list....332

trip no motor trip 326, 328
trip status reset 325
troubleshooting 510
Trip mode 59
Trip mode 486
troubleshooting 505
fault trips 510
other faults 513

U

U&M mode 248, 344
U/V/W terminals 31, 32, 33, 34, 35, 513
Under Load
Under Load Trip 322, 505
Under Load Warning 322, 509
underload fault trip 332
underload warning 332
underload fault trip ..... Refer to *Under Load*
Unipolar 39
up-down operation 149
User & Macro mode 58, 59, 61
User group 247
delete parameters 248
parameter registration 247
User mode 61
user V/F pattern operation 123
User/Macro group
parameter group 344
U&M mode 344
using the keypad 61

V

V/F control 121
linear V/F pattern operation 121
square reductionV/F pattern operation 122
user V/F pattern operation 123
V/F pattern configuration 80
V1 terminal 38, 88
V1/T1 (PTC) mode selection switch (SW3) 36
V2
analog input selection switch (SW4) 39
V2 input 96
I2 voltage input 96
Vacuum Pump (MC6) 501
variable torque load 122
vent cover 12
virtual multi-function input 341
voltage/current output terminal ..... Refer to AO terminal
VR terminal 38

W

warning 332, 505
fault/warning list 332
warning message 509
Warning 332
wiring 14, 26
circuit breaker 544
control terminal board wiring 36
copper cable 26
disassembling the cover 27
ferrite 40
ground 27
power terminal board 29
re-assembling the cover 47
wiring length 40
WM (write mode error) 349
Write parameter fault trip ..... Refer to *ParaWrite Trip*